KIRÁLY TRADING KFT H-1151 Budapest Mogyoród útja 12 - 14 tel: 061307-3801 Email:pzoli@kiralytrading.hu

# CONTENTS


**Workholding systems - TRUST IN KIPP** Page 2

**Index** Page 12

**Number index** Page 16

**Product overview** Page 18

**Flexible clamping system** Page 37

- Basic elements
- Add-on elements
- Positioning elements
- Support and rest elements
- Clamping and alignment elements
- Accesories

**Mineral cast system** Page 185

- Mineral cast cube tombstone
- Mineral cast cross tombstone
- Mineral cast plates

Compatible with flexible clamping system

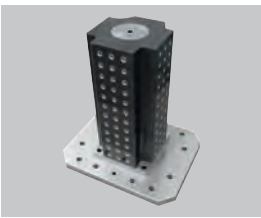

**Multi Clamping System** Page 189

- Base strips
- Stops
- Wedge clamp

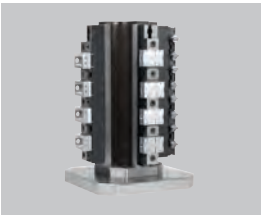

**One Touch Clamping System** Page 205

- Positioning elements
- Support and rest elements
- Clamping and alignment elements

**Zero Point Clamping System** Page 249

- UNI lock
- BALL lock

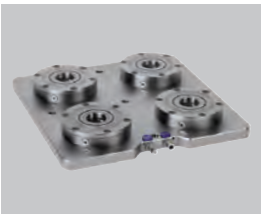

**5-axis module system** Page 263

- UNI lock
- Basic modules
- Adapter
- Accesories

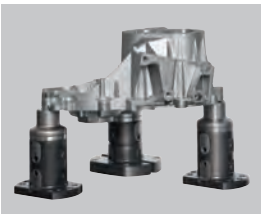

**Vice Clamping System** Page 287

- Machinable collet system
- 5-axis clamping system compact
- 5-axis clamp
- Centric vice

# TRUST IN KIPP

HEINRICH KIPP WERK is your engineering partner for clamping technology, standard elements and operating parts. We offer an extensive product range with more than 18,000 items. All parts have one thing in common: They operate unfailingly, are durable and available on a long-term basis. This is the reputation of the well established, owner-run company KIPP.

As a manufacturer, HEINRICH KIPP WERK has decades of experience in development with extensive production resources and logistics capacities. You are always in safe hands with KIPP.

# The clamping technology specialists

Are you looking for secure all-round solutions for your individual production environment? KIPP supplies over 2,000 clamping components. Together with you, our project team plans, develops and implements clamping fixtures for small to medium batch sizes. You profit from the experience of our specialists who are constantly developing this theme. We have already successfully realised countless clamping solution constructions.

Our team takes care of the systematic organisation of all your fixture equipment. As soon as our clamping system is integrated into your production process, set up times are minimised, auxiliary process times are shortened and machining conditions improved.

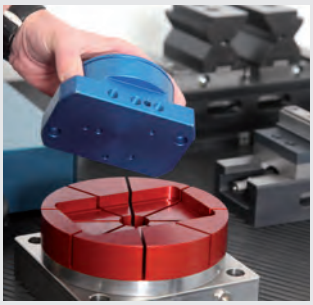

KIRÁLY TRADING KFT. H-1151 Budapest Mogyoród útja 12 - 14 tel: 061307-3801 Email:pzoli@kiralytrading.hu

# Innovations in clamping technology

# Complete machining with KIPP 5-axis clamping systems

We now offer a wide product spectrum that comprehensively covers 5-axis complete machining. Highly flexible clamping systems and minimum set-up times prepare you for any challenges in clamping technology.

HEINRICH KIPP WERK is continually expanding the product line of WORKHOLDING SYSTEMS.

KIRÁLY TRADING KFT H-1151 Budapest Mogyoród útja 12 - 14 tel: 061307-3801 Email:pzoli@kiralytrading.hu

# 5-axis module system **UNI**lock

NEW

The „KIPP 5-axis module system UNI lock" has been specifically designed for clamping complex workpieces. Even machining from the 6th side is possible. The workpieces are connected to the „UNI lock" by a screw connection.

Thanks to the modular construction and the variety of modules, the system can be configured individually and recombined for many applications. More than 70 elements are available:
basic modules, add-on modules and accessories. In combination, they guarantee a variety of heights, docking onto interfaces and machining different workpieces.

- Free of projecting edges
  5 side machining
- Zero point transferred
  to the workpiece
- Extremely high repeat accuracy
  through precise centring
  using short conical locators

# Zero point clamping system **UNI**lock

NEW

The „UNI lock zero-point clamping system" guarantees quick, precise clamping and referencing of fixtures and workpieces.
Maximum repeat accuracy is achieved through extremely precise centring using short conical locators.

A wide range of clamping stations suitable for all popular machines make the system enormously flexible. Another advantage:
one standard clamping pin size for all UNI lock systems.

- Positive locking /retaining force of 75,000 N (static) when fastened with an M 16 screw
- Extremely flexible clamping options and combinations
- Clamping pin is 100% compatible with the 5-axis module clamping system

KIRÁLY TRADING KFT H-1151 Budapest Mogyoród útja 12 - 14 tel: 061307-3801 Email:pzoli@kiralytrading.hu

# **5-AXIS**clamping system compact

NEW

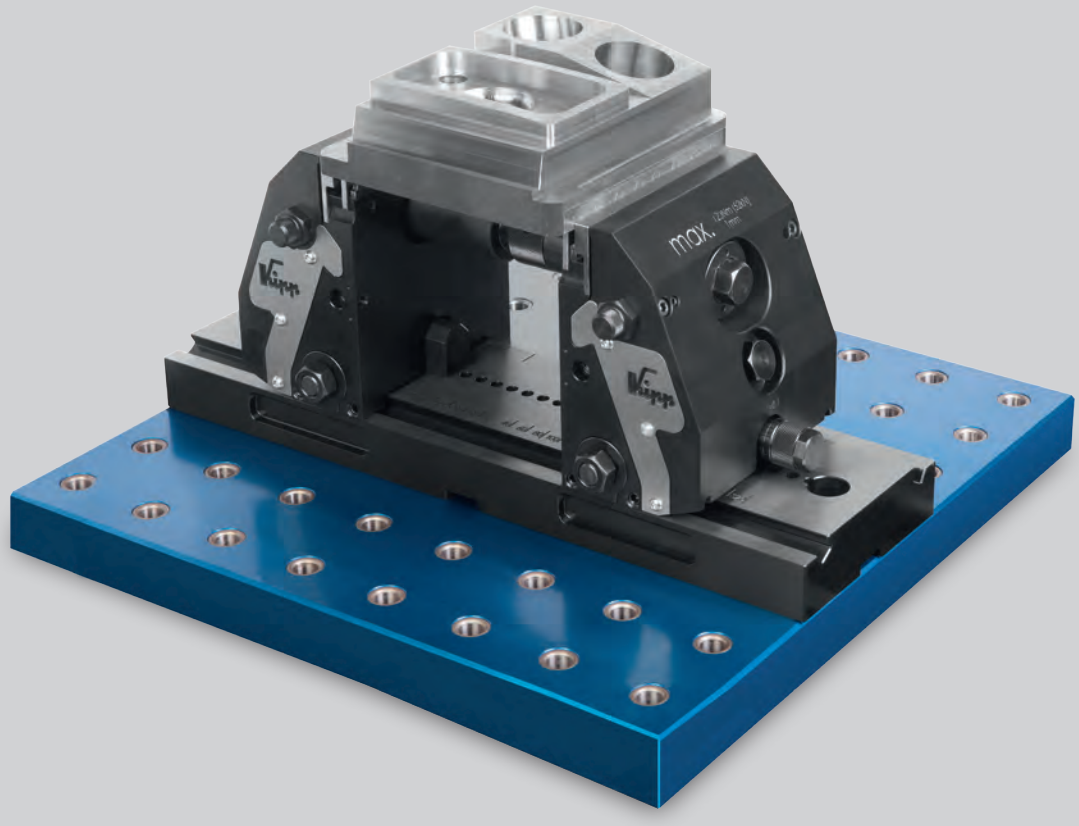

The „KIPP 5-axis compact clamping system“ has completely new clamping technology. The division of force flow and workpiece positioning achieves significantly improved clamping values. Thanks to the intelligent force distribution, only limited torques are transferred to the machine table.

The workpiece is always centred due to the symmetrical structure of the 5-axis clamping system. The positive down force on both sides of the vice jaw presses workpieces firmly onto the seating ledges. The new clamping technology increases the rigidity for high cutting and feed forces.

- Clamping width:
  20 mm up to 320 mm, freely extendable
- Jaw width:
  90 mm or 125 mm
- Interfaces:
  T-slot tables, grid systems,
  zero point clamping systems

# Mineral cast system **KIPP**block

NEW

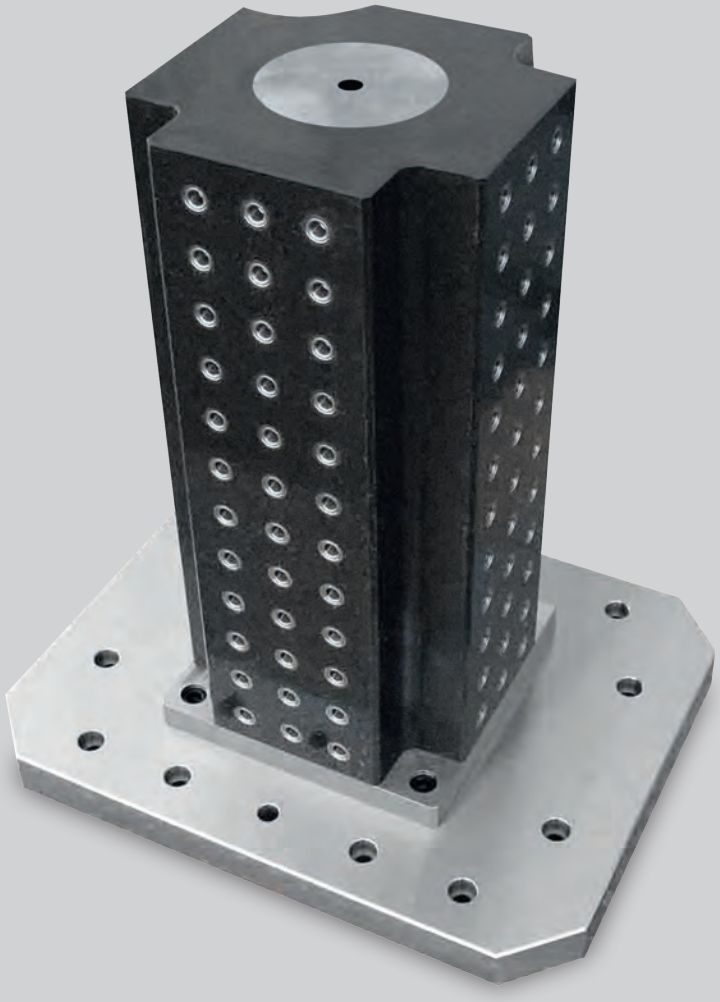

„KIPP block“ cube tombstones are used as an alternative to cast or steel tooling columns. Due to its low specific weight (lighter than aluminium), mineral cast cube tombstones are suitable for keeping the load on 4 and 5-axis machines as low as possible. Ideal for use on machines with high accelerations and rapid traverse speeds.

The flexibility of design is highly convincing. Steel jacketed versions in a wide range of shapes and sizes are also available.

- Excellent absorption properties, 6-10 times better than grey cast iron
- Low thermal conductivity
- Increases the cutting tool service life up to 30%

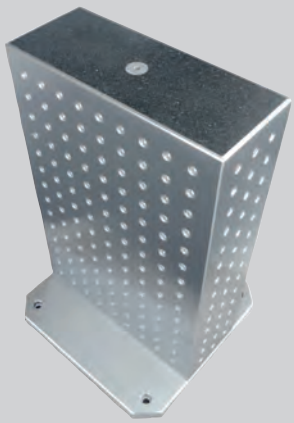

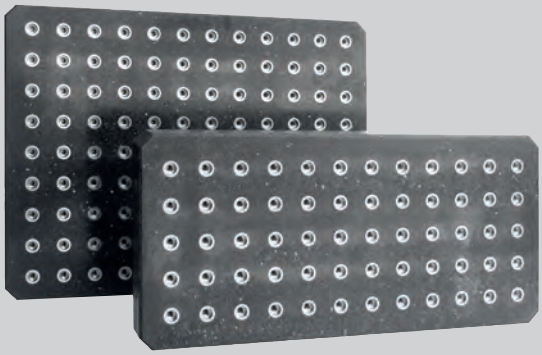

KIRÁLY TRADING KFT H-1151 Budapest Mogyoród útja 12 - 14 tel: 061307-3801 Email:pzoli@kiralytrading.hu

# CD-ROM: CAD 2D AND 3D LIBRARY

The KIPP CD-ROM offers:

- Product selection using multiple search criteria
- 3D product rendering, drawings, dimension tables and product information
- CAD download (2D and 3D)

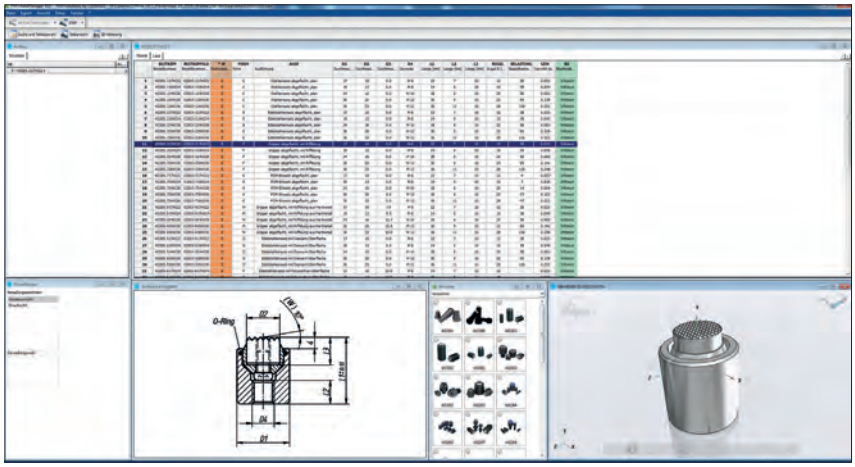

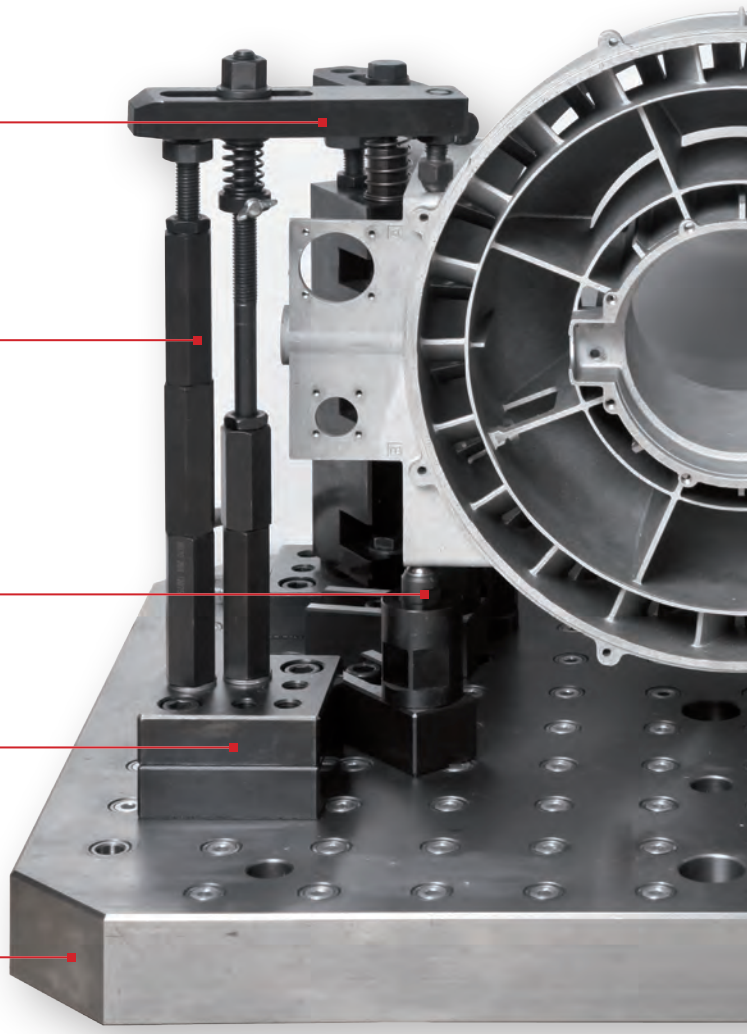

**Adjustable strap clamps**

**Extension pieces for height adjustment**

**Self-aligning pad for support**

**Support blocks for grid subdivisions**

**Grid subplate**

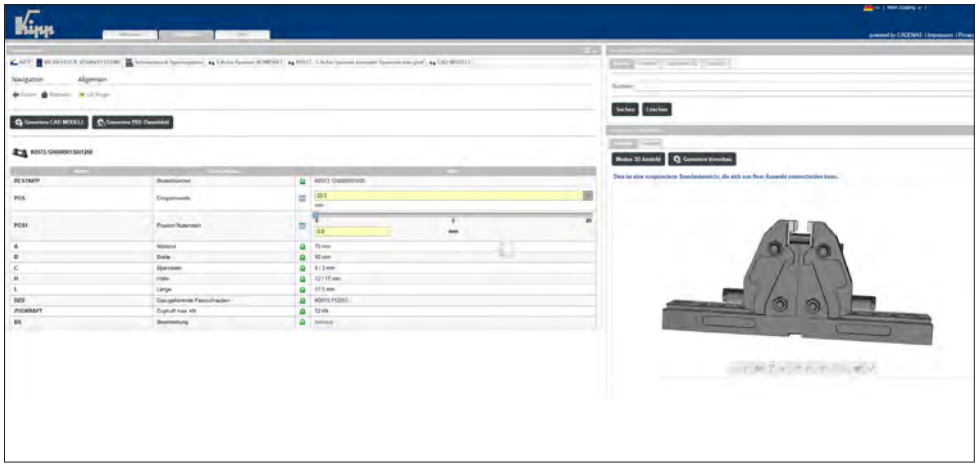

It is now possible to download the 2D and 3D CAD data directly from the selected product. One-time register,then this service will be available to you every time you log in.
It will of course continue to be possible to order the KIPP CAD library on a data storage medium.

**CAD portal: kipp.partcommunity.com**

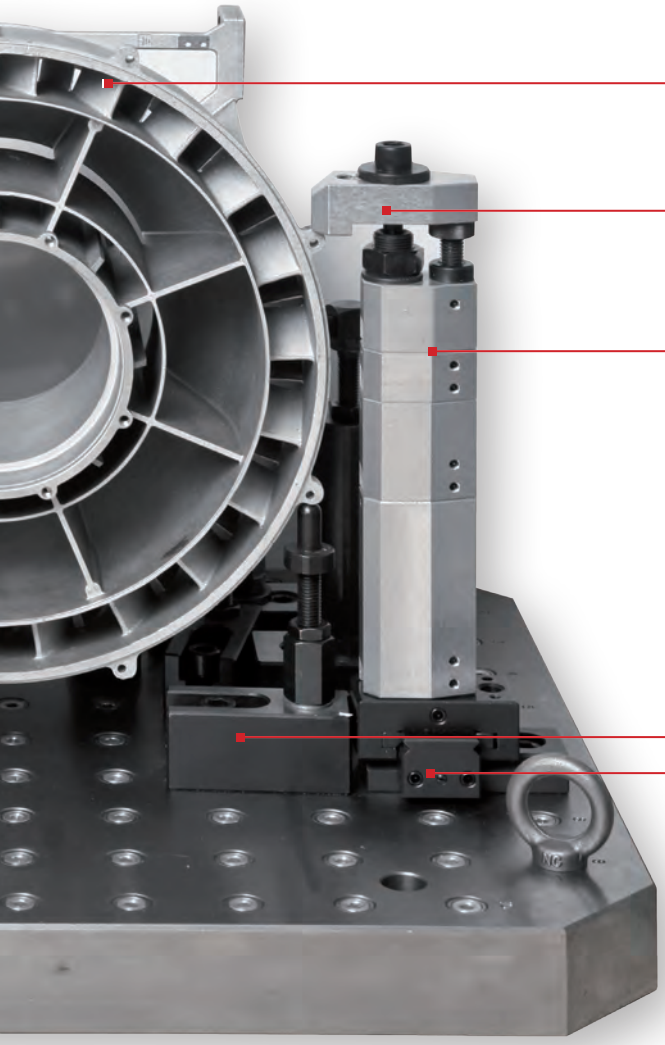

**Workpiece**

**Adjustable clamping unit**

**Different riser blocks**

**Adjustable seating ledge**

**Adjustable positioning element**

KIRÁLY TRADING KFT H-1151 Budapest Mogyoród útja 12 - 14 tel: 061307-3801 Email:pzoli@kiralytrading.hu

# Index


| A | Page |
|---|---|
| 3 Axis clamping system for grid plates | 314 |
| 3 Axis clamping system for T-slots | 316 |
| 5-axis clamping system compact smooth vice jaws | 298 |
| 5 Axis clamping system for grid plates | 315 |
| 5 Axis clamping system for T-slots | 317 |
| Adapter shaft | 308 |
| Adjustable stops | 68 |
| Adjustable supports | 118 |
| Aluminium protection plugs | 167 |
| Angle clamping adapter | 279 |
| Attachment jawsstepped, with grip rail | 327 |
| Attachment jawsuniversal | 327 |
| Attachment stepped jaw | 332 |

| B | Page |
|---|---|
| Ball-end thrust screws with head | 80-81 |
| Ball-end thrust screws without head with flattened ball | 82-83 |
| Ball-end thrust screws without head with flattened ball and rotation lock | 84 |
| Ball-end thrust screws without head with full ball | 86-87 |
| Base plate | 329 |
| Base plates | 299 |
| Base rails | 193 |

| C | Page |
|---|---|
| Centre jaw | 304 |
| Centric vicejaw width 100 mm | 330 |
| Centric vicejaw width 80 mm | 326 |
| Centring bushes | 260 |
| Centring clamping bolt | 285 |
| Centring pins for aligning hole | 164, 165 |
| Centring pins for central hole | 164 |
| Clamping arms for swing clamp | 220 |
| Clamping claw set | 311 |
| Clamping collets machinable | 246 |
| Clamping pins | 212 |
| Clamping pins (high force) | 213 |
| Clamping screws | 214 |
| Clamping screws (high force) | 215 |
| Clamping units | 138 |
| Clamping units pin-end strap | 128 |
| Clamp springs | 165 |
| Clamp straps | 131 |
| Clamp strapsgoose-neck | 130 |
| Clamp strapspin-end | 129 |
| Clamp strapstapped both ends | 132 |
| Clamp strapstapped heel | 133, 134 |
| Clamp strap unit | 139 |
| Claw clamps | 337 |
| Colletsfor external or internal clamping | 292 |
| Compact clamps | 136 |
| Connecting blocks | 163 |
| Connecting bolts | 146 |
| Connecting bushes | 148 |
| Connecting screws long | 142 |
| Connecting screws short | 141 |
| Coupling for cross-clamping | 309 |
| C-washersDIN 6372 enhanced | 176 |
| C-washersswing, with shoulder screw | 182 |
| Cylinder clamping set | 307 |

| D | Page |
|---|---|
| Draw-down jaws | 321 |

| E | Page |
|---|---|
| Eccentric supports | 115 |
| Extension nuts height 3xD | 174 |
| Extension pieces | 114 |
| Extensions for jack screws | 235 |
| Extension shafts | 308 |
| Extension shafts with union nut | 323 |
| Extractor | 183 |

| F | Page |
|---|---|
| Fastening blocks Form M | 62 |
| Fastening setfor T-slots | 324 |

| G | Page |
|---|---|
| Grippers adjustable | 112 |
| Grippers and inserts round | 108-109 |
| Grippers hexagonal | 110 |
| Grippers square | 111 |
| Grub screws with thrust pad | 123 |

| H | Page |
|---|---|
| Handles screw-in | 222 |

KIRÁLY TRADING KFT H-1151 Budapest Mogyoród útja 12 - 14 tel: 061307-3801 Email:pzoli@kiralytrading.hu

# Index


| | |
|---|---|
| Handles screw-in with torque limit | 223 |
| Hexagon head bolts DIN EN ISO 4014 / DIN EN 24014 | 181 |
| Hexagon head bolts full thread DIN 933 | 181 |
| Hexagon nuts Form B height 1.5xD, DIN 6330 enhanced | 175 |
| Hexagon nuts with collar height 1.5xD, DIN 6331 enhanced | 174 |
| Hinged stops | 337 |
| Hold-down jaw with spring blade for rough workpieces | 334 |
| Hook clamp holders | 153, 155 |
| Hook clamps | 149 |
| Hook clamps ground Form A/B/C | 151 |
| Hook clamps with collar | 150, 152 |

| I | Page |
|---|---|
| Inserts | 119 |
| Inserts for stepped jaws or reversible slides | 329 |

| J | Page |
|---|---|
| Jack screws | 233 |
| Jack screws extended | 234 |
| Jaw adapters for round workpieces | 321 |
| Jaw pins | 306, 322 |
| Jaw plates | 333 |
| Jaw plates machinable | 320 |
| Jaw plate smooth for centre jaw | 305 |
| Jaw plate smooth for pendulum jaws | 303 |
| Jaw plates smooth | 301 |
| Jaw plates standard | 320 |
| Jaw plates with pins | 301 |
| Jaw plates with pins for centre jaw | 305 |
| Jaw plates with pins for pendulum jaws | 303 |

| K | Page |
|---|---|
| Keyway nuts round | 197 |

| L | Page |
|---|---|
| Locating bushings for grid systems | 167 |
| Locating cylinders | 259 |
| Locating pins | 163 |
| Locating pins with ball-end Form A | 72 |
| Locating pins with ball-end Form B | 72 |
| Locating pinswith flattened ball-end Form C | 73 |
| Locating pins with flattened ball-end Form D | 73 |
| Locating sleeve | 68 |
| Locating supports | 70 |

| M | Page |
|---|---|
| Machinable collet system for grid plates | 291 |
| Machinable collet system for self-installation | 290 |
| Machinable soft jaw aluminium | 331 |
| Mineral cast cross tombstone | 186 |
| Mineral cast cube tombstone | 186 |
| Mineral cast cube tombstone with stainless steel jacket | 186 |
| Mineral cast cube tombstone with zero point clamping system | 186 |
| Mineral cast plates | 186 |
| Mineral cast system | 186 |
| Mini tooling blocks | 61 |
| Mounting plates for clamping collets | 247 |
| Multi-clamping system hard stops | 191 |
| Multi-clamping system soft stops | 192 |

| N | Page |
|---|---|
| Nuts for T-slotsDIN 508 enhanced | 171 |

| P | Page |
|---|---|
| Pendulum jaws | 302 |
| Positioning units | 143, 228 |
| Positioning units spring-loaded | 226 |
| Precision riser blocks Form D | 63 |
| Precision riser blocks Form E | 65 |
| Precision riser blocks Form M | 64 |
| Prism jaw pads | 335 |
| Prism jaws | 331 |
| Prism jawshorizontal and vertical | 328 |
| Protection bolts | 256 |
| Protective caps | 256 |
| Pull clamps | 208 |
| Pull clamps (high force) | 209 |

| Q | Page |
|---|---|
| Quick-fit couplings | 257 |

| R | Page |
|---|---|
| Rack plates CL | 159 |
| Receiver bushes Form A (pressed in from rear) | 261 |
| Receiver bushes Form B (screwed down from front) | 261 |
| Removable locating pins Forms A and C | 71 |

KIRÁLY TRADING KFT H-1151 Budapest Mogyoród útja 12 - 14 tel: 061307-3801 Email:pzoli@kiralytrading.hu

# Index


| | |
|---|---|
| Removable locating pins Forms B and D | 71 |
| Rest pads | 79, 113, 146 |
| Reversible slides | 335 |
| Reversible slides complete with grip rail | 328 |
| Riser blocks | 140 |
| Riser blocks Form H | 67 |
| Riser blocks Form P | 135 |
| Riser cylinders | 154 |
| Riser plates | 318 |
| Risers for compact clamps | 137 |
| Robust side clamps | 127 |
| Round positioning plates | 66 |

| S | Page |
|---|---|
| Screw stop adjustable | 77 |
| Seating blocks adjustable | 117 |
| Seating ledges | 197, 306, 319 |
| Self-aligning pads | 88-89 |
| Self-aligning pads adjustable | 96 |
| Self-aligning pads adjustable with O-ring | 98-99 |
| Self-aligning pads adjustable with O-ring, exchangeable inserts and hexagon socket | 106-107 |
| Self-aligning pads adjustable with O-ring and exchangeable inserts | 100-103 |
| Self-aligning pads adjustable with O-ring and hexagon socket | 104-105 |
| Self-aligning pads swivel angle 12° | 90 |
| Self-aligning pads swivel angle 14° and 20° | 91 |
| Self-aligning pads with O-ring | 92-93 |
| Self-aligning pads with O-ring and exchangeable inserts | 94-95 |
| Shoulder screws Form A | 69 |
| Shoulder screws Form B | 69, 324 |
| Side clamps | 124, 125, 239-241 |
| Side clampswith rest pad | 242 |
| Side stop | 126 |
| Slot guides | 336 |
| Slot keys | 169 |
| Socket head screws DIN 912 / DIN EN ISO 4762 | 180 |
| Soft jaw pads machinable | 333 |
| Spacing washers | 166 |
| Spherical washers DIN 6319, 10/01 | 178-179 |
| Stepped jaw | 332 |
| Stepped jaw pads | 334 |
| Stop blocks | 156 |
| Stopcarbide-coated and serrated | 195 |
| Stop prism | 196 |
| Stops | 194 |
| Stop set | 310, 323 |
| Stop with positive down force | 196 |
| Studs DIN 6379 | 172-173 |
| Subplates | 54-57 |
| Support blocks | 120, 147 |
| Support bolts | 121-122 |
| Supports | 116 |
| Swing clamps | 216 |
| Swing clamps (high force) | 218 |
| Swing clamps mini | 237 |
| Swing clamps mini, with cam lever | 236 |
| Swivel hold-down clamp mini, with cam lever | 238 |

| T | Page |
|---|---|
| Tension cone for internal clamping collet | 293 |
| Threaded bushings for grid systems | 168 |
| Thrust clamps | 221 |
| Toe clamps | 158, 244, 245 |
| Toe clamps compact | 162 |
| Toe clamps stepped | 157 |
| Toe stop adjustable, offset | 160 |
| Toe stops | 161 |
| Toe stopsstepped | 160 |
| Tombstones cube | 52-53 |
| Tombstones double-sided | 48-49 |
| Tombstones single-sided | 46-47 |
| Tombstones window frame | 50-51 |
| Tooling angle plates | 58, 59 |
| Tooling blocks | 60 |
| Tooling plates | 42-45 |
| T-slot guide rhombic | 336 |
| T-slot keys | 170 |
| T-slot plate | 325 |

| U | Page |
|---|---|
| UNI lock 5-axis add-on clamping module | 275 |
| UNI lock 5-axis basic module | 272 |
| UNI lock 5-axis basic module double clamp | 273 |
| UNI lock 5-axis clamping bolt for fastening to workpieces | 281 |
| UNI lock 5-axis collet adapter | 276 |

KIRÁLY TRADING KFT H-1151 Budapest Mogyoród útja 12 - 14 tel: 061307-3801 Email:pzoli@kiralytrading.hu

# Index


| | |
|---|---|
| UNI lock 5-axis face-grip adapter | 277 |
| UNI lock 5-axis locating bolts | 283 |
| UNI lock 5-axis locating bolts for fastening to workpieces | 284 |
| UNI lock 5-axis mounting base for general clamping | 274 |
| UNI lock 5-axis reducer adaptor | 279 |
| UNI lock 5-axis reducter adapter | 278 |
| UNI lock 5-axis T-slot centring clamp bolt | 282 |
| UNI lock clamping bolt | 255, 280 |
| UNI lock clamping station | 252, 253 |
| UNI lock installation clamp | 254 |

| V | Page |
|---|---|
| V-blocks, vertical | 74, 75 |
| V-blocks split | 76 |
| Vice jaw, complete | 300 |

| W | Page |
|---|---|
| Washers for clamps DIN 6340 | 175 |
| Washers medium, DIN 125 Form A | 177 |
| Wedge clamps | 200 |
| Wedge clamps jaw face smooth or serrated | 198 |
| Wedge clamps machinable | 199, 201 |
| Workpiece support cylinders | 232 |
| Workpiece supports | 231 |
| Workpiece supports adjustable | 229, 230 |

KIRÁLY TRADING KFT H-1151 Budapest Mogyoród útja 12 - 14 tel: 061307-3801 Email:pzoli@kiralytrading.hu

# Number index


| No. of group | Page |
|---|---|
| K0002 | 130 |
| K0012 | 149 |
| K0013 | 150 |
| K0014 | 151 |
| K0015 | 152 |
| K0017 | 153 |
| K0018 | 154 |
| K0036 | 162 |
| K0037 | 200 |
| K0038 | 201 |
| K0039 | 198 |
| K0282 | 88-89 |
| K0283 | 91 |
| K0284 | 92-93 |
| K0285 | 94-95 |
| K0287 | 96 |
| K0288 | 98-99 |
| K0289 | 100-103 |
| K0290 | 104-105 |
| K0291 | 106-107 |
| K0294 | 79 |
| K0297 | 121 |
| K0302 | 90 |
| K0307 | 113 |
| K0308 | 233 |
| K0350 | 72-73 |
| K0351 | 72-73 |
| K0377 | 171 |
| K0380 | 80-81 |
| K0383 | 82-84, 86-87 |
| K0385 | 108-109 |
| K0386 | 110 |
| K0387 | 111 |
| K0388 | 112 |
| K0500 | 290 |
| K0501 | 291 |
| K0502 | 292-293 |
| K0586 | 326 |
| K0587 | 327 |
| K0588 | 327 |
| K0589 | 328 |
| K0590 | 328 |
| K0591 | 329 |
| K0592 | 329 |
| K0593 | 330 |

| No. of group | Page |
|---|---|
| K0594 | 331 |
| K0595 | 331 |
| K0596 | 332 |
| K0597 | 332 |
| K0598 | 333 |
| K0599 | 333 |
| K0600 | 334 |
| K0601 | 334 |
| K0602 | 335 |
| K0603 | 335 |
| K0604 | 336 |
| K0605 | 336 |
| K0606 | 337 |
| K0607 | 337 |
| K0649 | 199 |
| K0697 | 172-173 |
| K0701 | 174 |
| K0702 | 175 |
| K0729 | 178-179 |
| K0730 | 176 |
| K0800 | 42, 44-45 |
| K0801 | 43 |
| K0802 | 46-47 |
| K0803 | 48-49 |
| K0804 | 50-51 |
| K0805 | 52-53 |
| K0806 | 54-57 |
| K0807 | 58 |
| K0808 | 59 |
| K0809 | 60-61 |
| K0810 | 62 |
| K0811 | 63-65, 67 |
| K0812 | 66 |
| K0813 | 68 |
| K0814 | 68 |
| K0815 | 69, 324 |
| K0816 | 70 |
| K0817 | 71 |
| K0818 | 71 |
| K0819 | 74-76 |
| K0820 | 77 |
| K0821 | 114 |
| K0822 | 115 |
| K0823 | 116 |
| K0824 | 117 |

| No. of group | Page |
|---|---|
| K0825 | 118 |
| K0826 | 119 |
| K0827 | 120 |
| K0828 | 122 |
| K0829 | 123 |
| K0830 | 124 |
| K0831 | 125 |
| K0832 | 126 |
| K0833 | 128 |
| K0834 | 129 |
| K0835 | 131 |
| K0836 | 132 |
| K0837 | 133 |
| K0838 | 134 |
| K0839 | 135 |
| K0840 | 136-137 |
| K0841 | 138 |
| K0842 | 139 |
| K0843 | 140 |
| K0844 | 141 |
| K0845 | 142 |
| K0846 | 143 |
| K0847 | 146 |
| K0848 | 146 |
| K0849 | 147 |
| K0850 | 148 |
| K0851 | 155 |
| K0852 | 156 |
| K0853 | 157-161 |
| K0854 | 163 |
| K0855 | 163 |
| K0856 | 164 |
| K0857 | 164 |
| K0858 | 165 |
| K0859 | 165 |
| K0860 | 166 |
| K0861 | 167 |
| K0862 | 167 |
| K0863 | 168 |
| K0864 | 169 |
| K0865 | 174 |
| K0867 | 175 |
| K0868 | 177 |
| K0869 | 180 |
| K0870 | 181 |

| No. of group | Page |
|---|---|
| K0871 | 181 |
| K0872 | 182 |
| K0873 | 183 |
| K0891 | 127 |
| K0902 | 191 |
| K0903 | 192 |
| K0904 | 193 |
| K0905 | 194-195 |
| K0906 | 196 |
| K0907 | 196 |
| K0908 | 197 |
| K0909 | 197 |
| K0910 | 208, 212, 214 |
| K0911 | 209, 213, 215 |
| K0912 | 216, 220 |
| K0913 | 218 |
| K0914 | 221 |
| K0915 | 222 |
| K0916 | 223 |
| K0917 | 226 |
| K0918 | 228 |
| K0919 | 229 |
| K0920 | 230 |
| K0921 | 231 |
| K0922 | 232 |
| K0923 | 234 |
| K0924 | 235 |
| K0925 | 236 |
| K0926 | 237 |
| K0927 | 238 |
| K0928 | 239 |
| K0929 | 240 |
| K0930 | 241 |
| K0931 | 242 |
| K0932 | 244 |
| K0933 | 245 |
| K0934 | 246, 247 |
| K0935 | 259 |
| K0936 | 260 |
| K0937 | 261 |
| K0938 | 261 |
| K0939 | 314, 315 |
| K0940 | 316, 317 |
| K0941 | 318 |
| K0942 | 319 |

# Number index


| No. of group | Page |
|---|---|
| K0943 | 320 |
| K0944 | 320 |
| K0945 | 321 |
| K0946 | 306, 322 |
| K0947 | 323 |
| K0948 | 323 |
| K0951 | 324 |
| K0952 | 325 |
| K0953 | 321 |
| K0954 | 170 |
| K0960 | 272 |
| K0961 | 273 |
| K0962 | 274 |
| K0963 | 275 |
| K0964 | 276 |
| K0965 | 277 |
| K0966 | 278, 279 |
| K0967 | 255, 280 |
| K0968 | 281 |
| K0969 | 282 |
| K0970 | 283 |
| K0971 | 284 |
| K0973 | 298 |
| K0974 | 306 |
| K0975 | 301 |
| K0976 | 300 |
| K0987 | 304 |
| K0988 | 302 |
| K0989 | 307 |
| K0990 | 308 |
| K0991 | 308 |
| K0992 | 309 |
| K0993 | 310 |
| K0994 | 299 |
| K1001 | 303 |
| K1002 | 305 |
| K1003 | 254 |
| K1008 | 311 |
| K1009 | 252, 253 |
| K1010 | 256 |
| K1011 | 257 |
| K1012 | 285 |
| K1013 | 279 |

KIRÁLY TRADING KFT H-1151 Budapest Mogyoród útja 12 - 14 tel: 061307-3801 Email:pzoli@kiralytrading.hu

# Product overview

## Flexible clamping system

**Basic elements**
**Add-on elements**
**Positioning elements**
**Support and rest elements**
**Clamping and alignment elements**
**Accessories**

Tooling plates
**K0800**

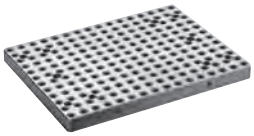

Page 42

Tooling plates
**K0801**

Page 43

Tooling plates
**K0800**

Page 44-45

Tombstones single-sided
**K0802**

Page 46-47

Tombstones double-sided
**K0803**

Page 48-49

Tombstones window frame
**K0804**

Page 50-51

Tombstones cube
**K0805**

Page 52-53

Subplates
**K0806**

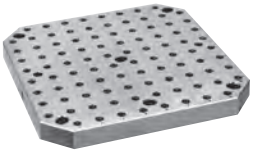

Page 54-55

Subplates
**K0806**

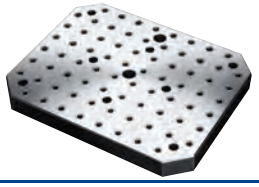

Page 56

Subplates
**K0806**

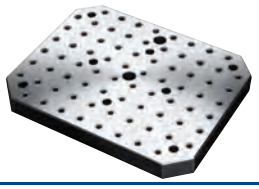

Page 57

Tooling angle plates
**K0807**

Page 58

Tooling angle plates
**K0808**

Page 59

Tooling blocks
**K0809**

Page 60

Mini tooling blocks
**K0809**

Page 61

Fastening blocks
Form M
**K0810**

Page 62

Precision riser blocks
Form D
**K0811**

Page 63



✶ new article

■ extended article

KIRÁLY TRADING KFT H-1151 Budapest Mogyoród útja 12 - 14 tel: 061307-3801 Email:pzoli@kiralytrading.hu

# Product overview

## Flexible clamping system


Precision riser blocks
Form M
**K0811**

Page 64

Precision riser blocks
Form E
**K0811**

Page 65

Round positioning plates
**K0812**

Page 66

Riser blocks
Form H
**K0811**

Page 67

Adjustable stops
**K0813**

Page 68

Locating sleeve
**K0814**

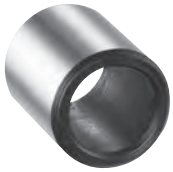

Page 68, 70

Shoulder screws
Form A
**K0815**

Page 69

Shoulder screws
Form B
**K0815**

Page 69-70

Locating supports
**K0816**

Page 70

Removable locating pins
Forms A and C
**K0817**

Page 71

Removable locating pins
Forms B and D
**K0818**

Page 71

Locating pins
with ball-end Form A
**K0350**

Page 72

Locating pins
with ball-end Form B
**K0351**

Page 72

Locating pins
with flattened ball-end Form C
**K0350**

Page 73

Locating pins
with flattened ball-end Form D
**K0351**

Page 73

V-blocks, vertical
**K0819**

Page 74

V-blocks, vertical
**K0819**

Page 74

V-blocks, vertical
**K0819**

Page 75


✶ new article

■ extended article

KIRÁLY TRADING KFT H-1151 Budapest Mogyoród útja 12 - 14 tel: 061307-3801 Email:pzoli@kiralytrading.hu

# Product overview

## Flexible clamping system

V-blocks, vertical
**K0819**

Page 75

V-blocks split
**K0819**

Page 76

Screw stop
adjustable
**K0820**

Page 77

Rest pads
**K0294**

Page 79

Ball-end thrust screws with head
**K0380**

Page 80-81

Ball-end thrust screws without head
with flattened ball
**K0383**

Page 82-83

Ball-end thrust screws without
head
with flattened ball and rotation
lock
**K0383**

Page 84

Ball-end thrust screws without head
with full ball
**K0383**

Page 86-87

Self-aligning pads
**K0282**

Page 778-779

Self-aligning pads
swivel angle 12°
**K0302**

Page 90

Self-aligning pads
swivel angle 14° and 20°
**K0283**

Page 91

Self-aligning pads
with O-ring
**K0284**

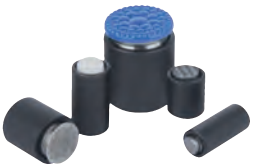

Page 92-93

Self-aligning pads
with O-ring and
exchangeable inserts
**K0285**

Page 94-95

Self-aligning pads adjustable
**K0287**

Page 96

Self-aligning pads adjustable
with O-ring
**K0288**

Page 98-99

Self-aligning pads adjustable
with O-ring and
exchangeable inserts
**K0289**

Page 100-103

Self-aligning pads adjustable
with O-ring and hexagon socket
**K0290**

Page 104-105

Self-aligning pads adjustable
with O-ring, exchangeable inserts
and hexagon socket
**K0291**

Page 106-107



✶ new article

■ extended article

KIRÁLY TRADING KFT H-1151 Budapest Mogyoród útja 12 - 14 tel: 061307-3801 Email:pzoli@kiralytrading.hu

# Product overview

## Flexible clamping system


Grippers and inserts round
**K0385**

Page 108-109

Grippers hexagonal
**K0386**

Page 110

Grippers square
**K0387**

Page 111

Grippers adjustable
**K0388**

Page 112

Rest pads
**K0307**

Page 113

Extension pieces
**K0821**

Page 114

Eccentric supports
**K0822**

Page 115

Supports
**K0823**

Page 116

Seating blocks adjustable
**K0824**

Page 117

Adjustable supports
**K0825**

Page 118

Inserts
**K0826**

Page 119

Support blocks
**K0827**

Page 120

Support bolts
**K0297**

Page 121

Support bolts
**K0828**

Page 122

Grub screws with thrust pad
**K0829**

Page 123

Side clamps
**K0830**

Page 124

Side clamps
**K0831**

Page 125

Side stop
**K0832**

Page 126


✶ new article ■ extended article

KIRÁLY TRADING KFT H-1151 Budapest Mogyoród útja 12 - 14 tel: 061307-3801 Email:pzoli@kiralytrading.hu

# Product overview

## Flexible clamping system


Robust side clamps
**K0891**

Page 127

Clamping units pin-end strap
**K0833**

Page 128

Clamp straps
pin-end
**K0834**

Page 129

Clamp straps
goose-neck
**K0002**

Page 130

Clamp straps
**K0835**

Page 131

Clamp straps
tapped both ends
**K0836**

Page 132

Clamp straps
tapped heel
**K0837**

Page 133

Clamp straps
tapped heel
**K0838**
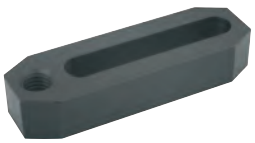
Page 134

Riser blocks
Form P
**K0839**

Page 135

Compact clamps
**K0840**

Page 136

Risers
for compact clamps
**K0840**

Page 137

Clamping units
**K0841**

Page 138

Clamp strap unit
**K0842**

Page 139

Riser blocks
**K0843**

Page 140

Connecting screws short
**K0844**

Page 141

Connecting screws long
**K0845**

Page 142

Positioning units
**K0846**

Page 143

Connecting bolts
**K0847**

Page 146




✶ new article

■ extended article

KIRÁLY TRADING KFT H-1151 Budapest Mogyoród útja 12 - 14 tel: 061307-3801 Email:pzoli@kiralytrading.hu

# Product overview

## Flexible clamping system


Rest pads
**K0848**

Page 146

Support blocks
**K0849**

Page 147

Connecting bushes
**K0850**

Page 148

Hook clamps
**K0012**

Page 149

Hook clamps
with collar
**K0013**

Page 150

Hook clamps ground
Form A/B/C
**K0014**

Page 151

Hook clamps
with collar
**K0015**

Page 152

Hook clamp holders
**K0017**

Page 153

Riser cylinders
**K0018**

Page 154

Hook clamp holders
**K0851**

Page 155

Stop blocks
**K0852**

Page 156

Toe clamps
stepped
**K0853**

Page 157

Toe clamps
stepped
**K0853**

Page 157

Toe clamps
**K0853**

Page 158

Toe clamps
**K0853**

Page 158

Rack plates CL
**K0853**

Page 159

Toe stops
stepped
**K0853**

Page 160

Toe stop adjustable, offset
**K0853**

Page 160


✶ new article ■ extended article

KIRÁLY TRADING KFT H-1151 Budapest Mogyoród útja 12 - 14 tel: 061307-3801 Email:pzoli@kiralytrading.hu

# Product overview

## Flexible clamping system


Toe stops
**K0853**

Page 161

Toe stops
**K0853**

Page 161

Toe clamps compact
**K0036**

Page 162

Connecting blocks
**K0854**
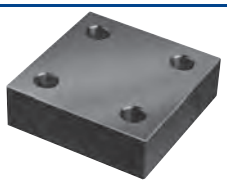
Page 163

Locating pins
**K0855**

Page 163

Centring pins
for central hole
**K0856**

Page 164

Centring pins
for aligning hole
**K0857**

Page 164

Centring pins
for aligning hole
**K0858**

Page 165

Clamp springs
**K0859**

Page 165

Spacing washers
**K0860**

Page 166

Locating bushings
for grid systems
**K0861**

Page 167

Aluminium protection plugs
**K0862**

Page 167

Threaded bushings
for grid systems
**K0863**

Page 168

Slot keys
**K0864**
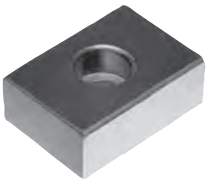
Page 169

T-slot keys
**K0954**
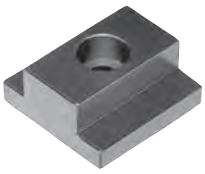
Page 170

Nuts for T-slots
DIN 508 enhanced
**K0377**

Page 171

Studs
DIN 6379
**K0697**

Page 172-173

Extension nuts
height 3xD
**K0865**

Page 174




✶ new article

■ extended article

KIRÁLY TRADING KFT H-1151 Budapest Mogyoród útja 12 - 14 tel: 061307-3801 Email:pzoli@kiralytrading.hu

# Product overview

## Flexible clamping system


Hexagon nuts with collar
height 1.5xD,
DIN 6331 enhanced
**K0701**

Page 174

Hexagon nuts Form B
height 1.5xD,
DIN 6330 enhanced
**K0702**

Page 175

Washers for clamps
DIN 6340
**K0867**

Page 175

C-washers
DIN 6372 enhanced
**K0730**

Page 176

Washers
medium, DIN 125 Form A
**K0868**

Page 177

Spherical washers
DIN 6319, 10/01
**K0729**

Page 178-179

Socket head screws
DIN 912 / DIN EN ISO 4762
**K0869**

Page 180

Hexagon head bolts
DIN EN ISO 4014 /
DIN EN 24014

**K0870**

Page 181

Hexagon head bolts
full thread DIN 933
**K0871**

Page 181

C-washers
swing, with shoulder screw
**K0872**

Page 182

Extractor
**K0873**

Page 183

**Mineral cast cube tombstone**
**Mineral cast cross tombstone**
**Mineral cast plates**

Mineral cast cube tombstone

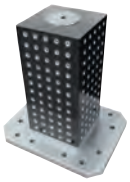

Page 186

Mineral cast cube tombstone
with stainless steel jacket

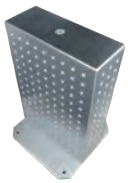

Page 186

Mineral cast cross tombstone

Page 186

Mineral cast cube tombstone
with zero point clamping system

Page 186

Mineral cast plates

Page 186


★ new article

■ extended article

KIRÁLY TRADING KFT H-1151 Budapest Mogyoród útja 12 - 14 tel: 061307-3801 Email:pzoli@kiralytrading.hu



# Multi Clamping System

Multi-clamping system
hard stops
**K0902**

Page 191

Multi-clamping system
soft stops
**K0903**

Page 192

Base rails
**K0904**

Page 193

Stops
**K0905**

Page 194

Stop
carbide-coated and serrated
**K0905**

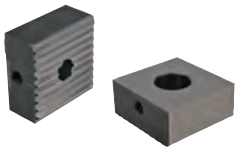

Page 195

Stop prism
**K0906**

Page 196

Stop with positive down force
**K0907**

Page 196

Seating ledges
**K0908**

Page 197

Keyway nuts round
**K0909**

Page 197

Wedge clamps
jaw face smooth or serrated
**K0039**

Page 198

Wedge clamps
machinable
**K0649**

Page 199

Wedge clamps
**K0037**

Page 200

Wedge clamps
machinable
**K0038**

Page 201



✶ new article ■ extended article

KIRÁLY TRADING KFT H-1151 Budapest Mogyoród útja 12 - 14 tel: 061307-3801 Email:pzoli@kiralytrading.hu



# One Touch Clamping System

## Positioning elements
## Structural and supporting elements
## Clamping and alignment elements

Pull clamps
**K0910**

Page 208

Pull clamps (high force)
**K0911**

Page 209

Clamping pins
**K0910**

Page 212

Clamping pins (high force)
**K0911**

Page 213

Clamping screws
**K0910**

Page 214

Clamping screws (high force)
**K0911**

Page 215

Swing clamps
**K0912**

Page 216

Swing clamps (high force)
**K0913**

Page 218

Clamping arms
for swing clamp
**K0912**
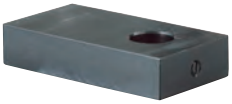
Page 220

Thrust clamps
**K0914**

Page 221

Handles screw-in
**K0915**

Page 222

Handles screw-in
with torque limit
**K0916**

Page 223

Positioning units
spring-loaded
**K0917**

Page 226

Positioning units
**K0918**

Page 228

Workpiece supports
adjustable
**K0919**

Page 229

Workpiece supports
adjustable
**K0920**

Page 230


✶ new article

■ extended article

KIRÁLY TRADING KFT H-1151 Budapest Mogyoród útja 12 - 14 tel: 061307-3801 Email:pzoli@kiralytrading.hu

# Product overview

## One Touch Clamping System


Workpiece supports
**K0921**

Page 231

Workpiece support cylinders
**K0922**

Page 232

Jack screws
**K0308**

Page 233

Jack screws extended
**K0923**

Page 234

Extensions for jack screws
**K0924**

Page 235

Swing clamps
mini, with cam lever
**K0925**

Page 236

Swing clamps mini
**K0926**

Page 237

Swivel hold-down clamp
mini, with cam lever
**K0927**

Page 238

Side clamps
**K0928**

Page 239

Side clamps
**K0929**

Page 240

Side clamps
**K0930**

Page 241

Side clamps
with rest pad
**K0931**

Page 242

Toe clamps
**K0932**

Page 244

Toe clamps
**K0933**

Page 245

Clamping collets machinable
**K0934**

Page 246

Mounting plates
for clamping collets
**K0934**

Page 247




✶ new article

■ extended article

KIRÁLY TRADING KFT H-1151 Budapest Mogyoród útja 12 - 14 tel: 061307-3801 Email:pzoli@kiralytrading.hu



# Zero Point Clamping System

## UNI lock
## BALL lock

UNI lock clamping station
**K1009**

Page 252

UNI lock clamping station
**K1009**

Page 253

UNI lock installation clamp
**K1003**

Page 254

UNI lock clamping bolt
**K0967**

Page 255

Protection bolts
**K1010**

Page 256

Protective caps
**K1010**

Page 256

Quick-fit couplings
**K1011**

Page 257

Locating cylinders
**K0935**

Page 259

Centring bushes
**K0936**

Page 260

Receiver bushes
Form A (pressed in from rear)
**K0937**

Page 261

Receiver bushes
Form B
(screwed down from front)
**K0938**

Page 261


✶ new article ■ extended article

KIRÁLY TRADING KFT H-1151 Budapest Mogyoród útja 12 - 14 tel: 061307-3801 Email:pzoli@kiralytrading.hu

# Product overview

## 5-axis module system

### UNI lock

UNI lock 5-axis basic module
**K0960**

Page 272

UNI lock 5-axis basic module double clamp
**K0961**

Page 273

UNI lock 5-axis mounting base for general clamping
**K0962**

Page 274

UNI lock 5-axis add-on clamping module
**K0963**

Page 275

UNI lock 5-axis collet adapter
**K0964**

Page 276

UNI lock 5-axis face-grip adapter
**K0965**

Page 277

UNI lock 5-axis reducter adapter
**K0966**

Page 278

UNI lock 5-axis reducer adaptor
**K0966**

Page 279

Angle clamping adapter
**K1013**

Page 279

UNI lock clamping bolt
**K0967**

Page 255, 280

UNI lock 5-axis clamping bolt for fastening to workpieces
**K0968**

Page 281

UNI lock 5-axis T-slot centring clamp bolt
**K0969**

Page 282

UNI lock 5-axis locating bolts
**K0970**

Page 283

UNI lock 5-axis locating bolts for fastening to workpieces
**K0971**

Page 284

Centring clamping bolt
**K1012**

Page 285




✶ new article ■ extended article

KIRÁLY TRADING KFT H-1151 Budapest Mogyoród útja 12 - 14 tel: 061307-3801 Email:pzoli@kiralytrading.hu



# Vice Clamping System

## Positive Clamping System
## 5-Axis-Clamping-System Compact
## 5 Axis Clamping System Centric Clamp

Machinable collet system
for self-installation
**K0500**

Page 290

Machinable collet system
for grid plates
**K0501**

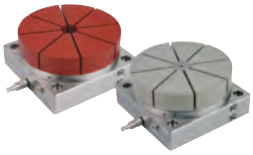

Page 291

Collets
for external or internal clamping
**K0502**

Page 292

Tension cone
for internal clamping collet
**K0502**

Page 293

5-axis clamping system
compact
smooth vice jaws
**K0973**

Page 298

Base plates
**K0994**

Page 299

Vice jaw, complete
**K0976**

Page 300

Jaw plates smooth
**K0975**

Page 301

Jaw plates with pins
**K0975**

Page 301

Pendulum jaws
**K0988**

Page 302

Jaw plate smooth
for pendulum jaws
**K1001**

Page 303

Jaw plates with pins
for pendulum jaws
**K1001**

Page 303

Centre jaw
**K0987**

Page 304

✶ new article ■ extended article

KIRÁLY TRADING KFT H-1151 Budapest Mogyoród útja 12 - 14 tel: 061307-3801 Email:pzoli@kiralytrading.hu

# Product overview

## Vice Clamping System


Jaw plate smooth
for centre jaw
**K1002**

Page 305

Jaw plates with pins
for centre jaw
**K1002**

Page 305

Seating ledges
**K0974**

Page 306

Jaw pins
**K0946**

Page 306

Cylinder clamping set
**K0989**

Page 307

Extension shafts
**K0990**

Page 308

Adapter shaft
**K0991**

Page 308

Coupling
for cross-clamping
**K0992**

Page 309

Stop set
**K0993**

Page 310

Clamping claw set
**K1008**

Page 311




✶ new article ■ extended article

KIRÁLY TRADING KFT H-1151 Budapest Mogyoród útja 12 - 14 tel: 061307-3801 Email:pzoli@kiralytrading.hu

# Product overview

## Vice Clamping System


3 Axis clamping system
for grid plates
**K0939**

Page 314

5 Axis clamping system
for grid plates
**K0939**

Page 315

3 Axis clamping system
for T-slots
**K0940**

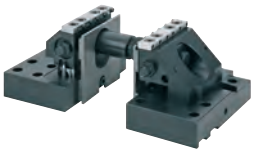

Page 316

5 Axis clamping system
for T-slots
**K0940**

Page 317

Riser plates
**K0941**

Page 318

Seating ledges
**K0942**

Page 319

Jaw plates standard
**K0943**

Page 320

Jaw plates machinable
**K0944**

Page 320

Draw-down jaws
**K0953**

Page 321

Jaw adapters
for round workpieces
**K0945**

Page 321

Jaw pins
**K0946**

Page 322

Extension shafts
with union nut
**K0947**

Page 323

Stop set
**K0948**

Page 323

Shoulder screws
Form B
**K0815**

Page 324

Fastening set
for T-slots
**K0951**

Page 324

T-slot plate
**K0952**

Page 325


✶ new article

■ extended article

KIRÁLY TRADING KFT H-1151 Budapest Mogyoród útja 12 - 14 tel: 061307-3801 Email:pzoli@kiralytrading.hu



# Vice Clamping System


Centric vice
jaw width 80 mm
**K0586**

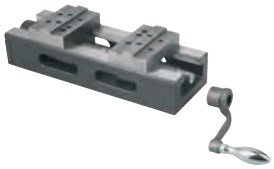

Page 326

Attachment jaws
stepped, with grip rail
**K0587**

Page 327

Attachment jaws
universal
**K0588**

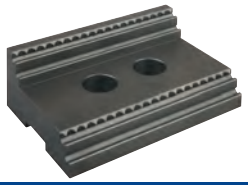

Page 327

Prism jaws
horizontal and vertical
**K0589**

Page 328

Reversible slides
complete with grip rail
**K0590**

Page 328

Inserts
for stepped jaws
or reversible slides
**K0591**

Page 329

Base plate
**K0592**

Page 329

Centric vice
jaw width 100 mm
**K0593**

Page 330

Prism jaws
**K0594**

Page 331

Machinable soft jaw
aluminium
**K0595**

Page 331

Stepped jaw
**K0596**

Page 332

Attachment stepped jaw
**K0597**

Page 332

Jaw plates
**K0598**

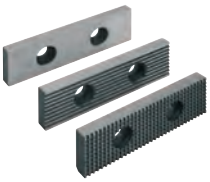

Page 333

Soft jaw pads
machinable
**K0599**

Page 333

Stepped jaw pads
**K0600**

Page 334

Hold-down jaw with spring blade
for rough workpieces
**K0601**

Page 334

Prism jaw pads
**K0602**

Page 335

Reversible slides
**K0603**

Page 335




✶ new article

■ extended article

KIRÁLY TRADING KFT H-1151 Budapest Mogyoród útja 12 - 14 tel: 061307-3801 Email:pzoli@kiralytrading.hu



# Vice Clamping System


T-slot guide
rhombic
**K0604**

Page 336

Slot guides
**K0605**

Page 336

Claw clamps
**K0606**

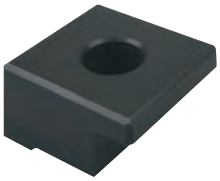

Page 337

Hinged stops
**K0607**

Page 337

KIRÁLY TRADING KFT H-1151 Budapest Mogyoród útja 12 - 14 tel: 061307-3801 Email:pzoli@kiralytrading.hu

# Flexible Clamping System

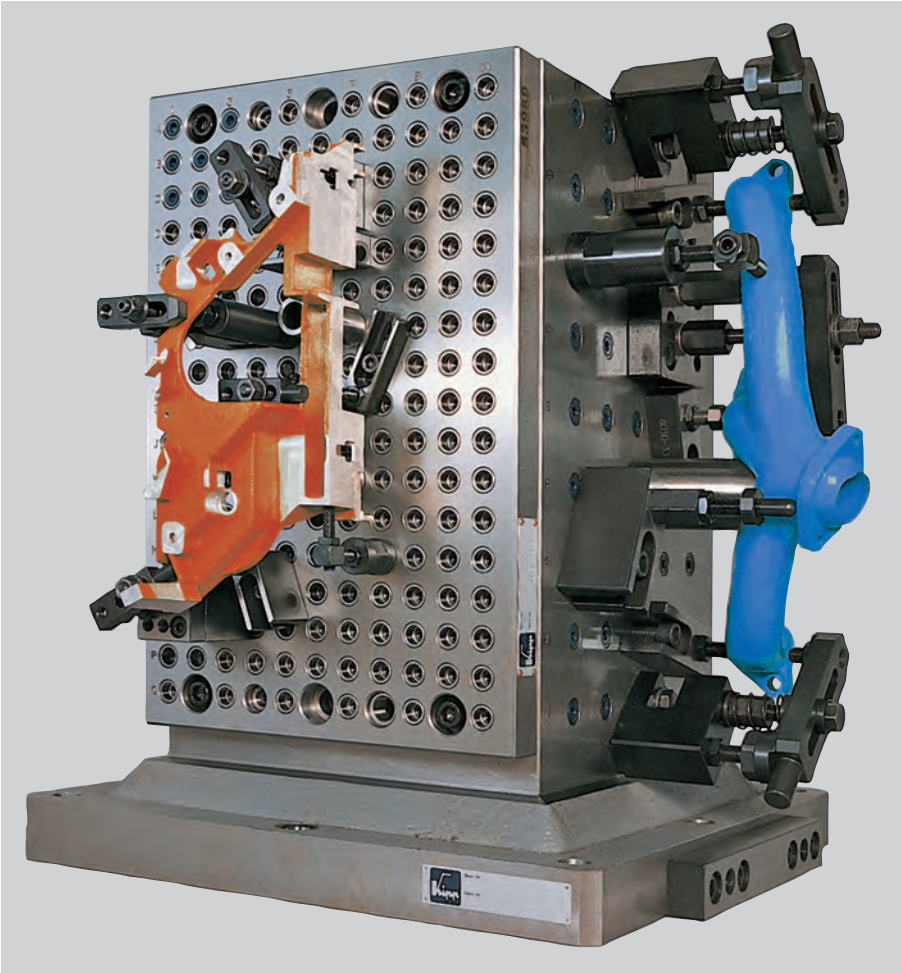

Basic elements
Add-on elements
Positioning elements
Support and rest elements
Clamping and alignment elements
Accessories

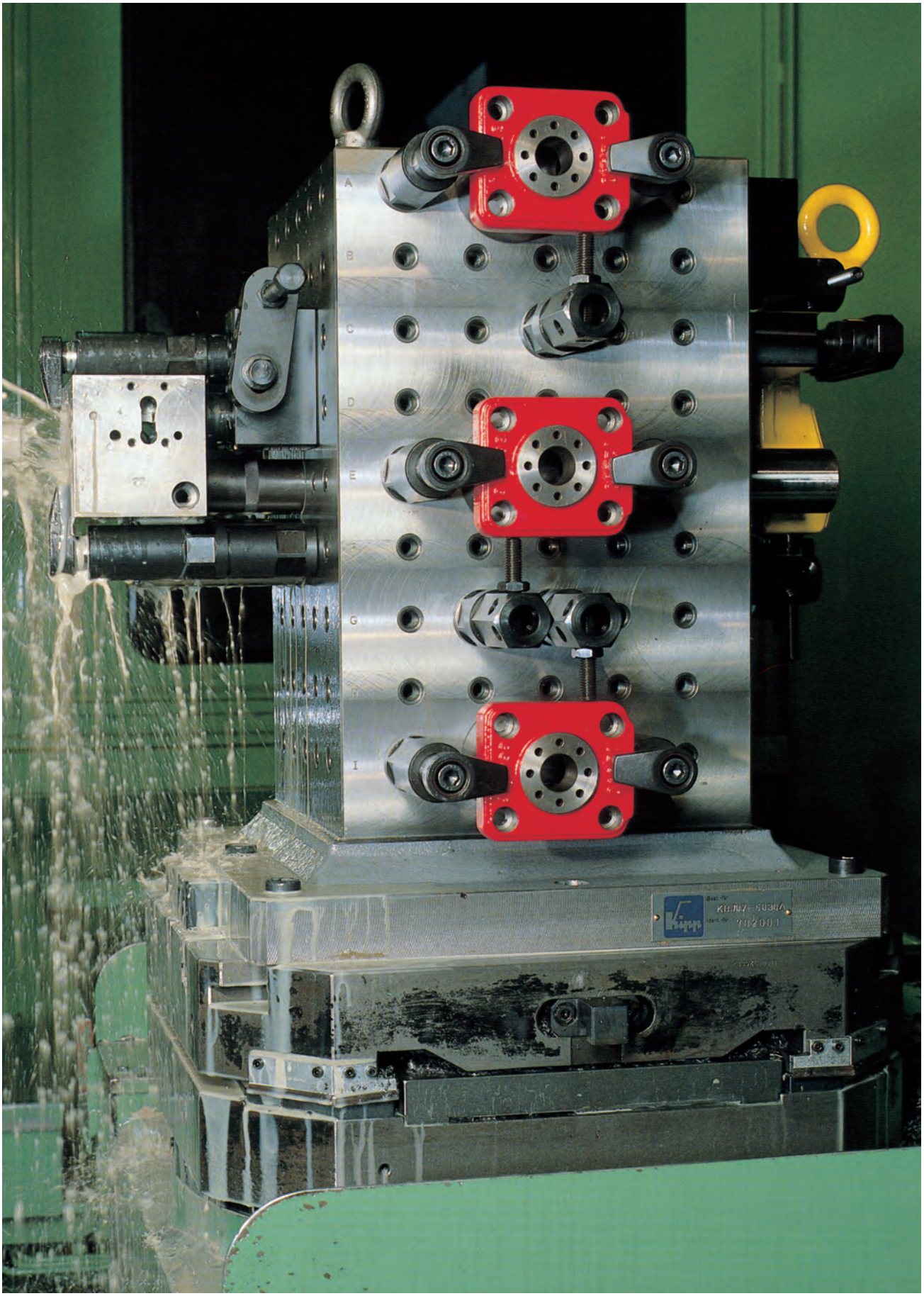
A
B
C
D
E
F
G
H
I

# Grid holes and pitches

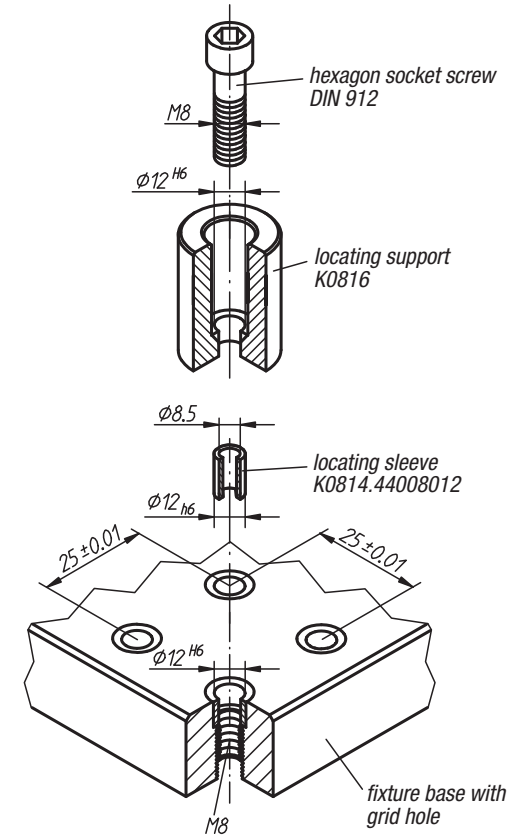


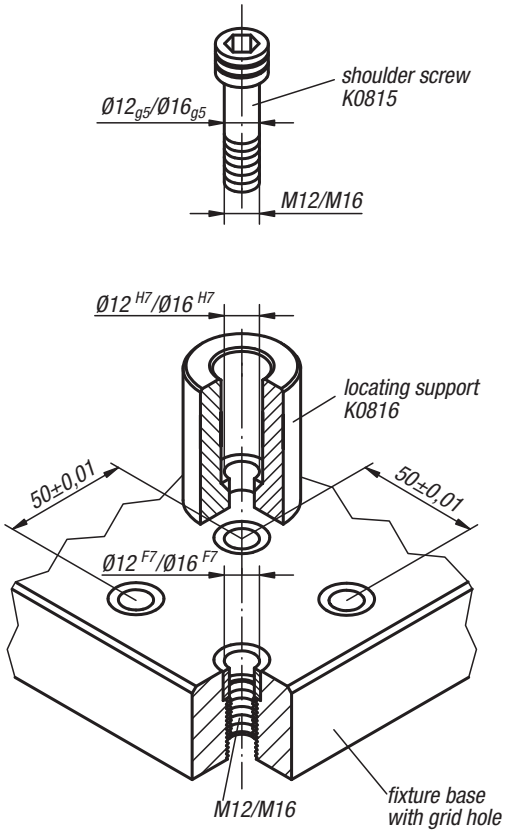


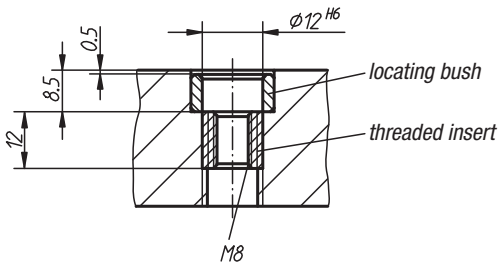


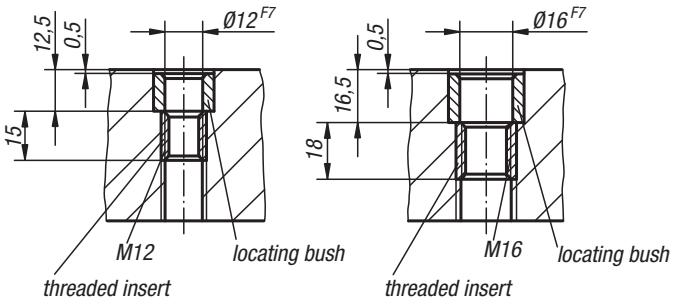


**Grid hole:**

The characteristic feature of the grid hole is its dual function: the coaxial arrangement of the locating and the threaded parts allows positioning and fastening at the same time with one grid hole (see illustrations). As a result, the size of the fixture elements can be reduced to a minimum and their flexibility increased accordingly.

Each grid hole consists of two parts:

a) reamed bush. Material: tool steel, hardened.

b) threaded insert. Material: carbon steel, tempered to ca. 1100-1300 N/mm².

Since the reamed bushes are recessed 0.5 mm from the surface of the fixture bases, the mounting surfaces can be re-machined in the event of wear.

# Positioning base elements on machine tables

Single side tombstone K0802, double side tombstone K0803, cube tombstone K0805 and subplates K0806 have two positioning options:

**a) Positioning on subplates for machine-tools acc. to DIN 55 201.**

**Positioning procedure:**

1. Insert locating pin in the centre bore of the subplate.
2. Position the tombstones, cube tombstones and subplates over the central hole.
3. Use the locating pin for the aligning hole to align the basic elements.

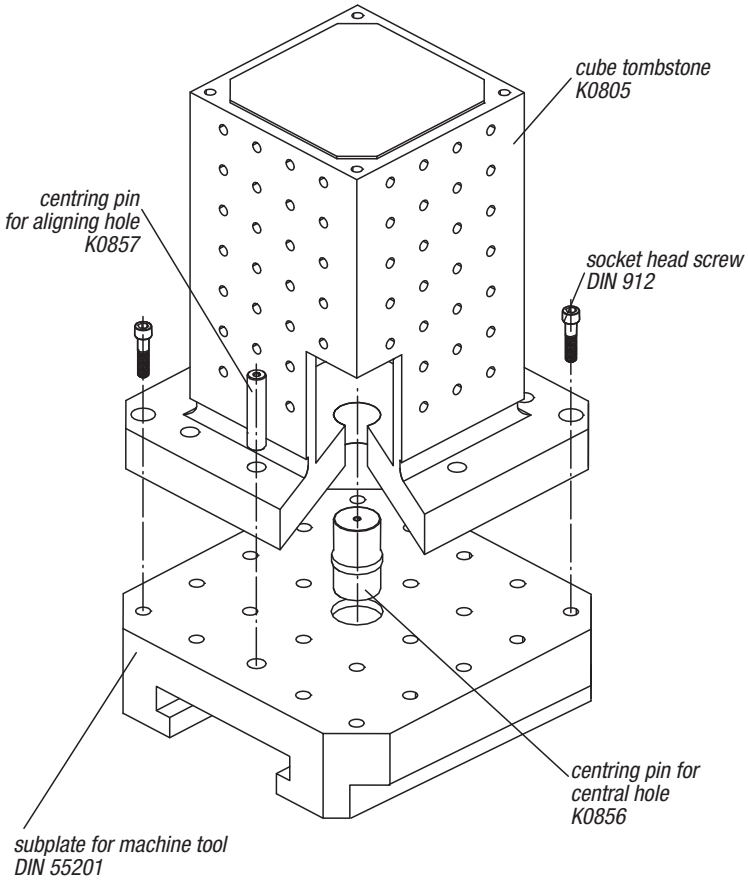


**b) Positioning on subplates for machine tools acc. to JIS 6337-1980.**

**Positioning procedure:**

1. Mount stop plates on the machine table.
2. Attach stop points to the reference faces (stop plates) using socket head screws.

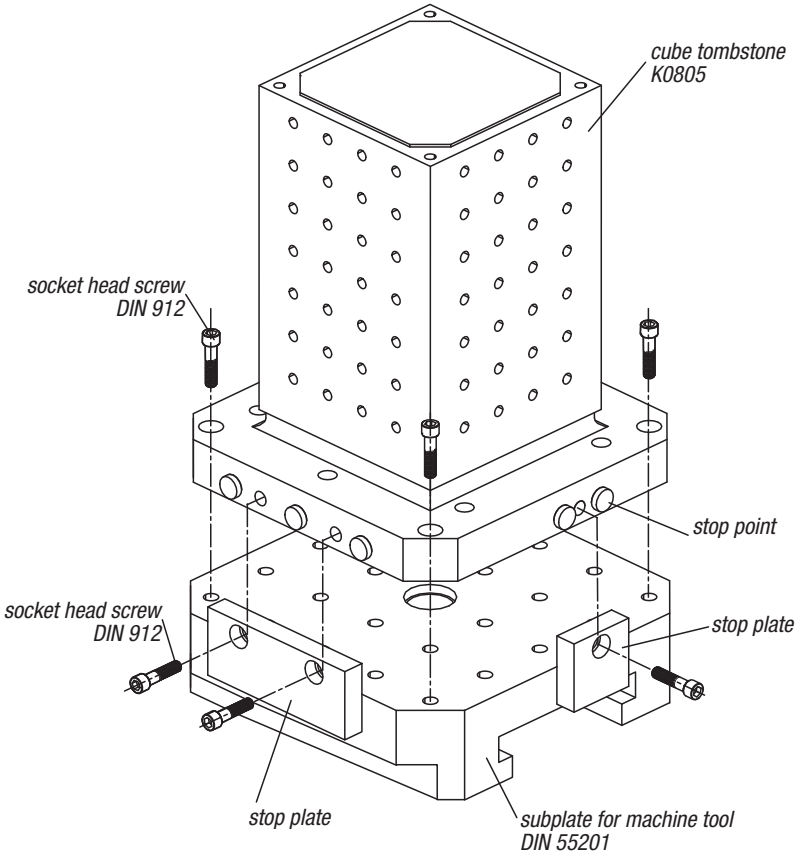

# Positioning base elements on machine tables

Locating pins are used for positioning tooling plates K0800. The tooling plates each have four precision holes for the locating pins (two holes on each axis).

An M6 screw inserted into the head of the locating pin is used to insert this pin accurately into the T-slots or to remove it.

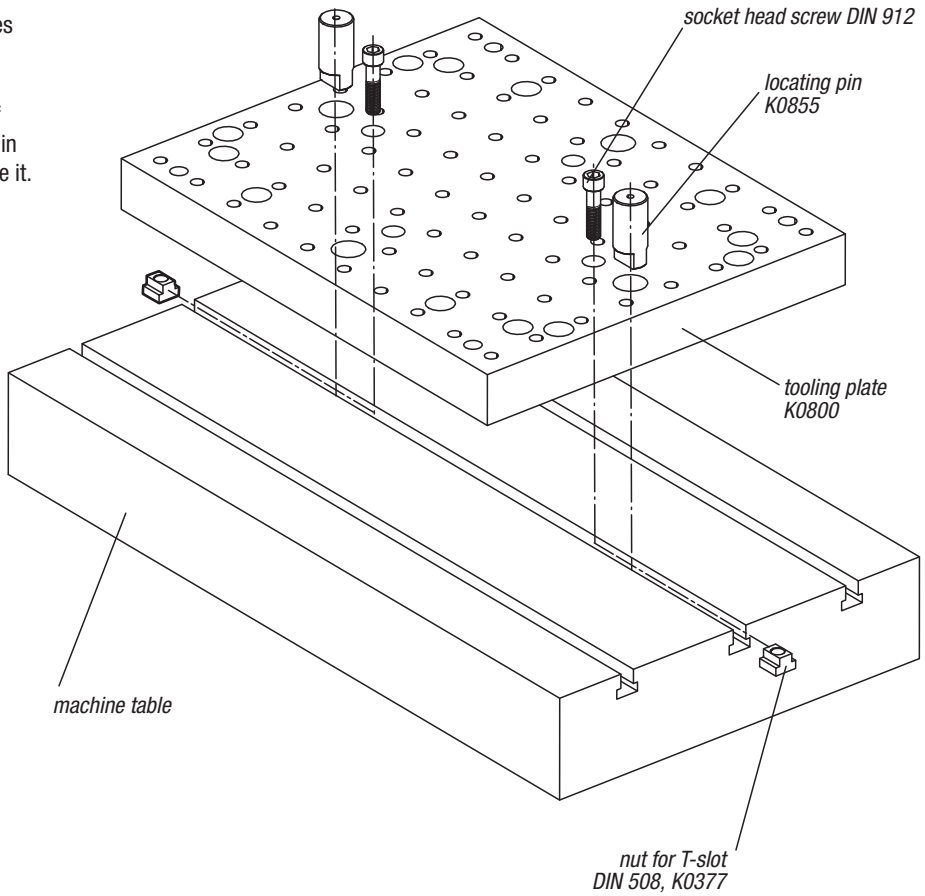

KIRÁLY TRADING KFT H-1151 Budapest Mogyoród útja 12 - 14 tel: 061307-3801 Email:pzoli@kiralytrading.hu

# Tooling plates

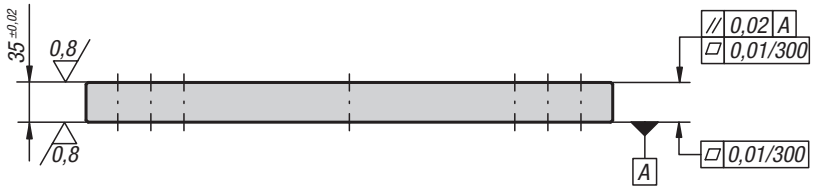


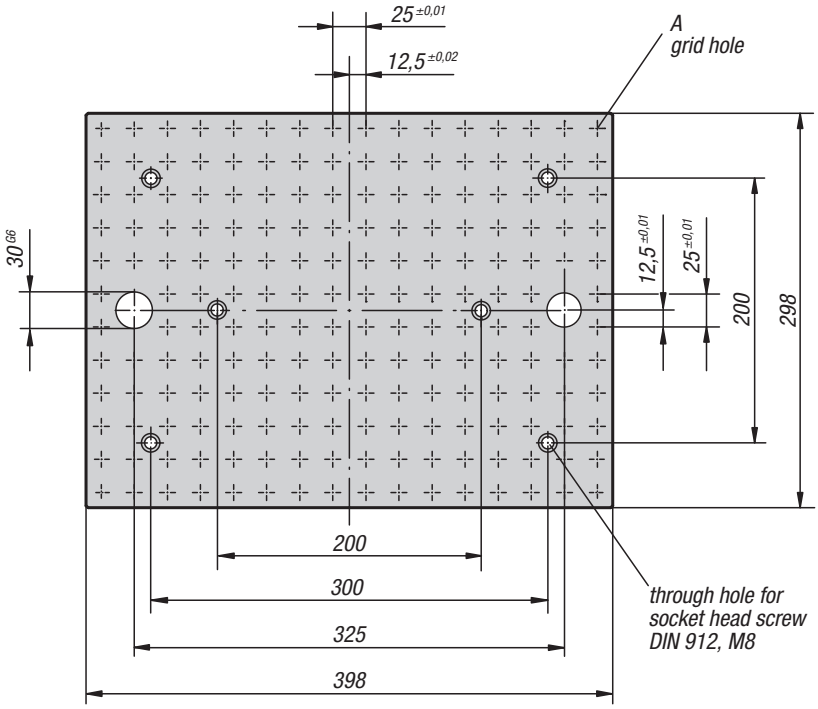


**Material:**
Grey cast iron GJL 250

**Version:**
Mounting surfaces ground

**Sample order:**
K0800.083040

**Note:**
Grid hole pitch 25 ±0.01mm. Grid hole plugs and ring bolts for lifting are supplied.

## KIPP Tooling plates

| Order No. | A locating hole | A thread | No. of grid holes | Approx. weight kg |
|---|---|---|---|---|
| **K0800.083040** | 12 H6 | M8 | 188 | 19 |

KIRÁLY TRADING KFT H-1151 Budapest Mogyoród útja 12 - 14 tel: 061307-3801 Email:pzoli@kiralytrading.hu

# Tooling plates

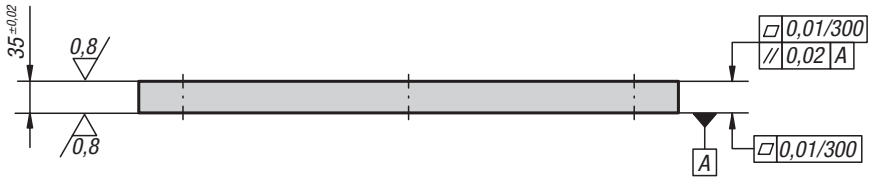


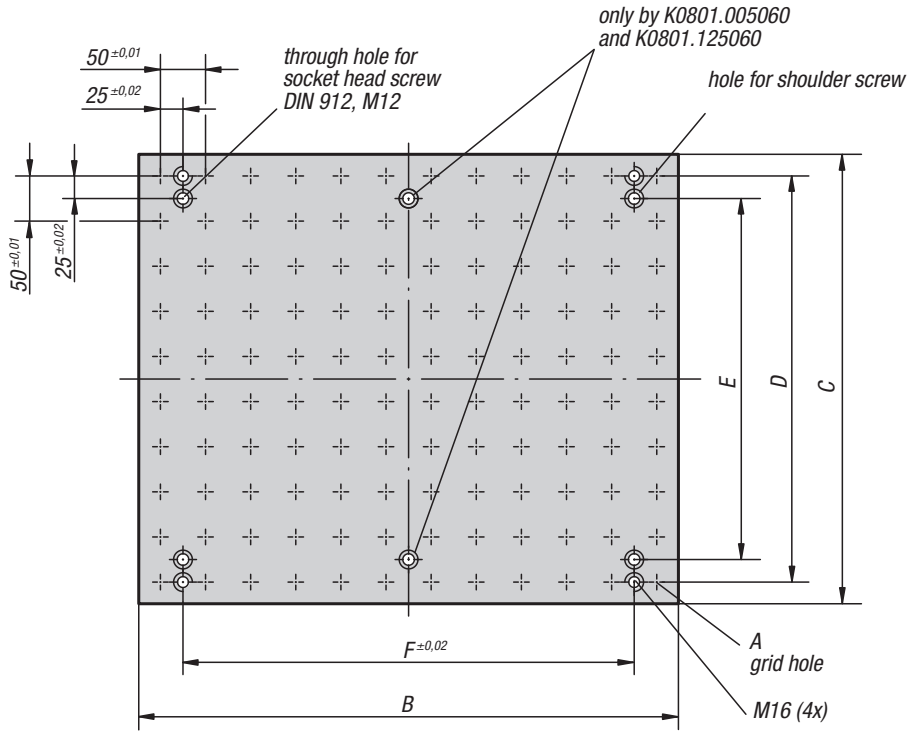


Fig. 1

**Material:**
Grey cast iron GJL 250

**Version:**
Mounting surfaces ground

**Sample order:**
K0801.003040

**Note:**
Grid hole pitch 50 ±0.01 mm. Grid hole plugs and ring bolts for lifting are supplied.
The tooling plates can be used with tooling angle plates K0807 (see Fig. 1). The tooling plates are positioned using shoulder screws K0815.1..., which are inserted into the fastening holes. The DIN 912 socket head screws are only used for additional fastening. Fig. 2 shows a further application variant. The double sided tombstones K0804 are dimensionally matched to the tooling plates.

Fig. 2

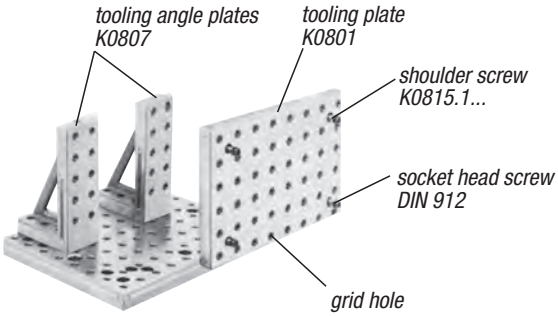


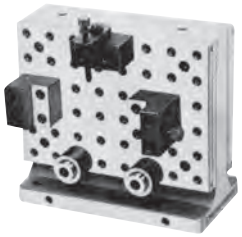

## KIPP Tooling plates

| Order No. | A locating hole | A thread | B | C | D | E | F | No. of grid holes | Suitable shoulder screw | Approx. weight kg |
|---|---|---|---|---|---|---|---|---|---|---|
| **K0801.003040** | – | – | 398 | 298 | 250 | 200 | 300 | – | K0815.112055 | 31 |
| **K0801.004050** | – | – | 498 | 398 | 350 | 300 | 400 | – | K0815.112055 | 51 |
| **K0801.005060** | – | – | 598 | 498 | 450 | 400 | 500 | – | K0815.112055 | 77 |
| **K0801.123040** | 12 F7 | M12 | 398 | 298 | 250 | 200 | 300 | 48 | K0815.112055 | 29 |
| **K0801.124050** | 12 F7 | M12 | 498 | 398 | 350 | 300 | 400 | 80 | K0815.112055 | 48 |
| **K0801.125060** | 12 F7 | M12 | 598 | 498 | 450 | 400 | 500 | 120 | K0815.112055 | 73 |

KIRÁLY TRADING KFT H-1151 Budapest Mogyoród útja 12 - 14 tel: 061307-3801 Email:pzoli@kiralytrading.hu

# Tooling plates

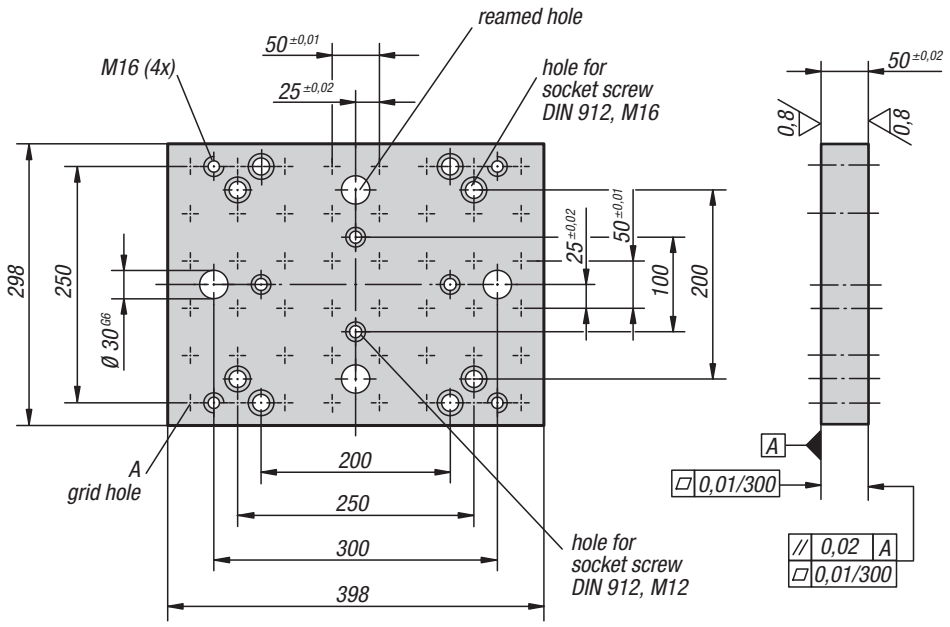

**Material:**
Grey cast iron GJL 250

**Version:**
Mounting surfaces ground

**Sample order:**
K0800.003040

**Note:**
Grid hole pitch 50 ±0.01mm.
Grid hole plugs and ring bolts for lifting are supplied.
For large workpieces the tooling plates can be joined together using connecting pieces K0854.400.

## KIPP Tooling plates

| Order No. | A locating hole | A thread | No. of grid holes | Approx. weight kg |
|---|---|---|---|---|
| **K0800.003040** | – | – | – | 42 |
| **K0800.123040** | 12 F7 | M12 | 48 | 40 |

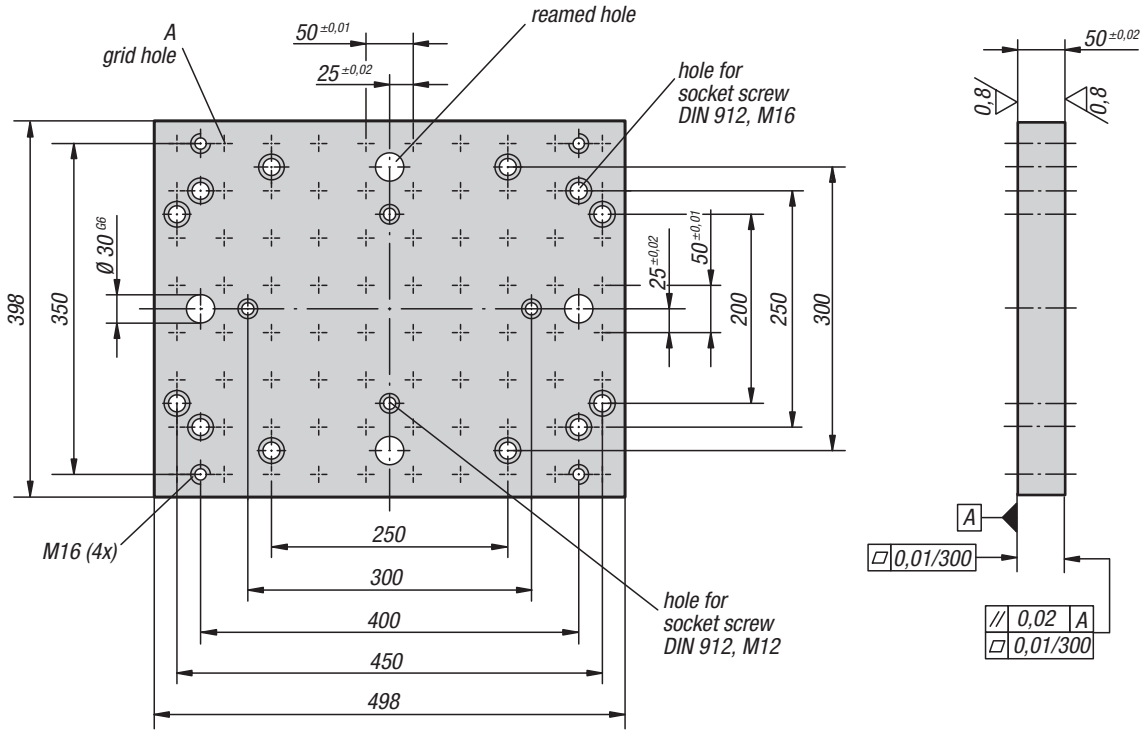


## KIPP Tooling plates

| Order No. | A locating hole | A thread | No. of grid holes | Approx. weight kg |
|---|---|---|---|---|
| **K0800.004050** | – | – | – | 70 |
| **K0800.124050** | 12 F7 | M12 | 80 | 67 |

KIRÁLY TRADING KFT H-1151 Budapest Mogyoród útja 12 - 14 tel: 061307-3801 Email:pzoli@kiralytrading.hu

# Tooling plates

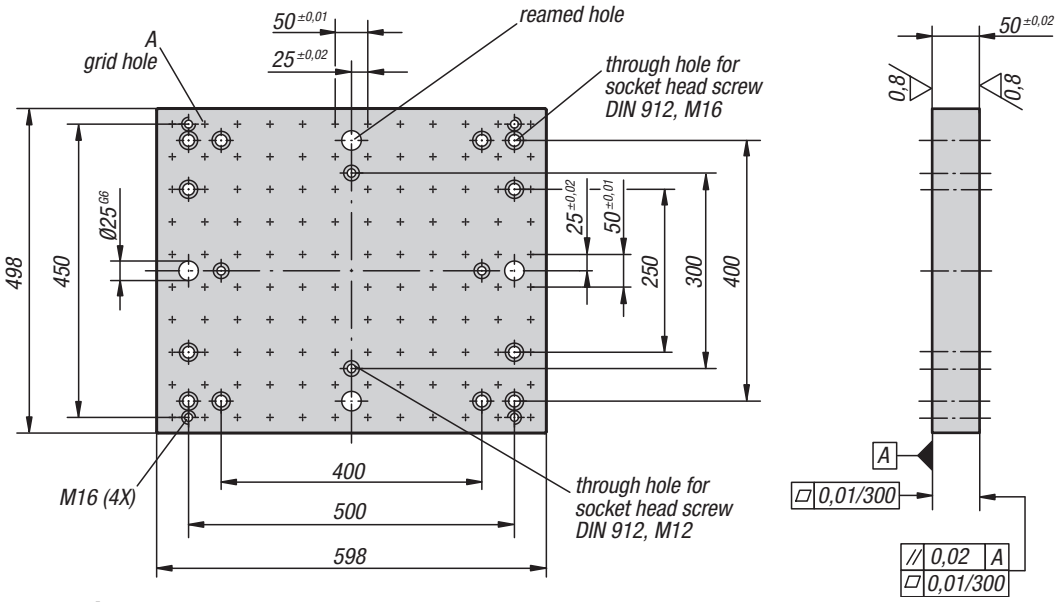


## KIPP Tooling plates

| Order No. | A locating hole | A thread | No. of grid holes | Approx. weight kg |
|---|---|---|---|---|
| **K0800.005060** | – | – | – | 106 |
| **K0800.125060** | 12 F7 | M12 | 120 | 101 |
| **K0800.165060** | 16 F7 | M16 | 120 | 98 |

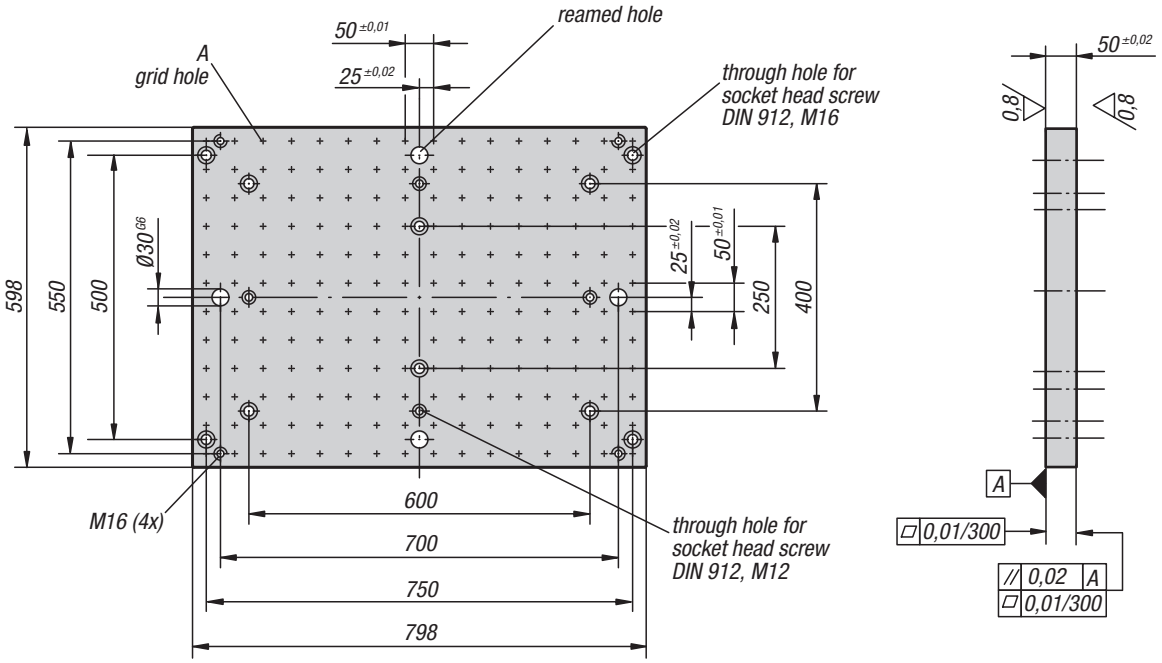


## KIPP Tooling plates

| Order No. | A locating hole | A thread | No. of grid holes | Approx. weight kg |
|---|---|---|---|---|
| **K0800.006080** | – | – | – | 172 |
| **K0800.126080** | 12 F7 | M12 | 192 | 164 |
| **K0800.166080** | 16 F7 | M16 | 192 | 157 |

# Tombstones single-sided

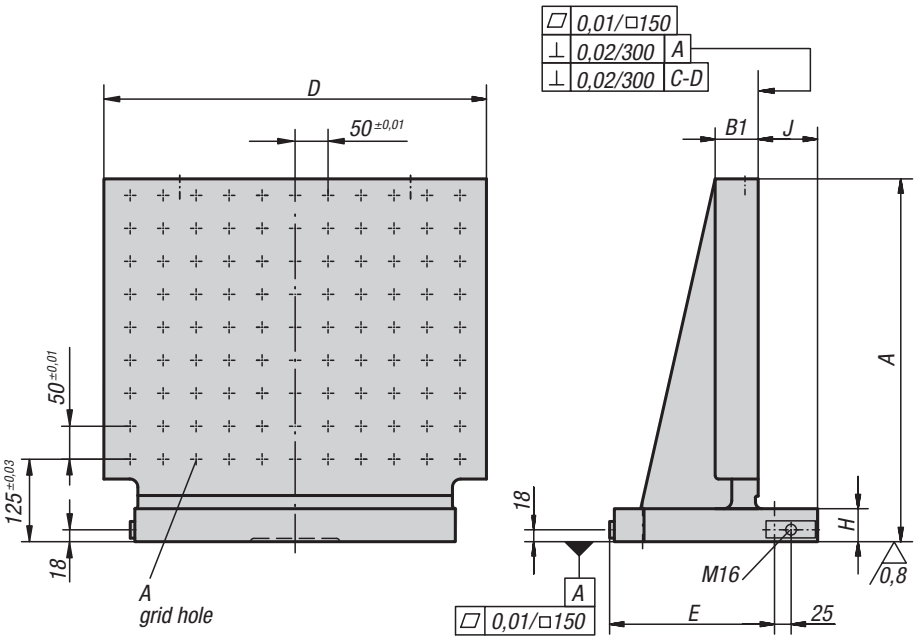


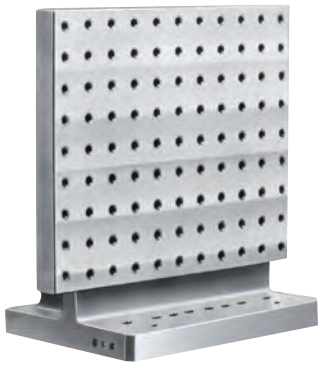

**Material:**
Meehanite cast iron GJL 300

**Version:**
Reference surfaces precision machined. The versions without grid holes have 1 mm allowance on the clamping surfaces.

**Sample order:**
K0802.004047

**Note:**
Grid hole pitch 50 ±0.01 mm. Grid hole plugs and ring bolts for lifting are supplied. The tombstones are matched to pallets for machine tools acc. to DIN 55201 and JIS 6337-1980. Other dimensions on request.

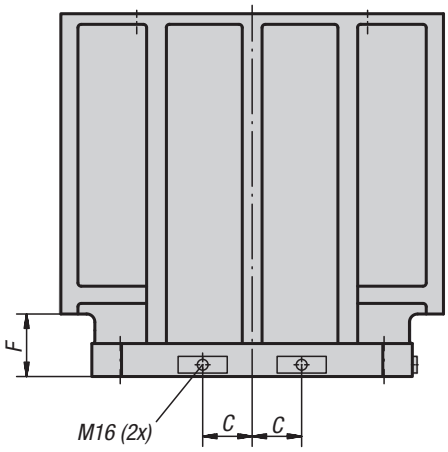


## KIPP Tombstones without grid holes

| Order No. | Version | A | B1 | C | D | E | E1 | F | G | H | J | Approx. weight kg |
|---|---|---|---|---|---|---|---|---|---|---|---|---|
| **K0802.004047** | without grid holes | 450 | 61 | 55 | 470 | 200 | 24±0,2 | 85 | 20 | 45 | 89 | 98 |
| **K0802.005058** | without grid holes | 550 | 66 | 75 | 580 | 250 | 24±0,2 | 95 | 20 | 50 | 89 | 161 |
| **K0802.006376** | without grid holes | 700 | 76 | 100 | 760 | 315 | 49±0,2 | 100 | 25 | 55 | 114 | 313 |
| **K0802.008090** | without grid holes | 800 | 81 | 135 | 900 | 400 | 49±0,2 | 100 | 25 | 60 | 114 | 434 |

## KIPP Tombstones with grid holes.

| Order No. | Version | A | B | C | D | E | E1 | F | G | H | J | A locating hole | A thread | No. of grid holes | Approx. weight kg |
|---|---|---|---|---|---|---|---|---|---|---|---|---|---|---|---|
| **K0802.124047** | with grid holes | 450 | 60 | 60 | 60 | 200 | 25±0,03 | 85 | 20 | 20 | 90 | 12F7 | M12 | 63 | 95 |
| **K0802.125058** | with grid holes | 550 | 65 | 65 | 65 | 250 | 25±0,03 | 95 | 20 | 20 | 90 | 12F7 | M12 | 99 | 157 |
| **K0802.165058** | with grid holes | 550 | 65 | 65 | 65 | 250 | 25±0,03 | 95 | 20 | 20 | 90 | 16F7 | M16 | 99 | 154 |
| **K0802.166376** | with grid holes | 700 | 75 | 75 | 75 | 315 | 50±0,03 | 100 | 25 | 25 | 115 | 16F7 | M16 | 180 | 298 |

# Tombstones single-sided

K0802.004047
K0802.124047

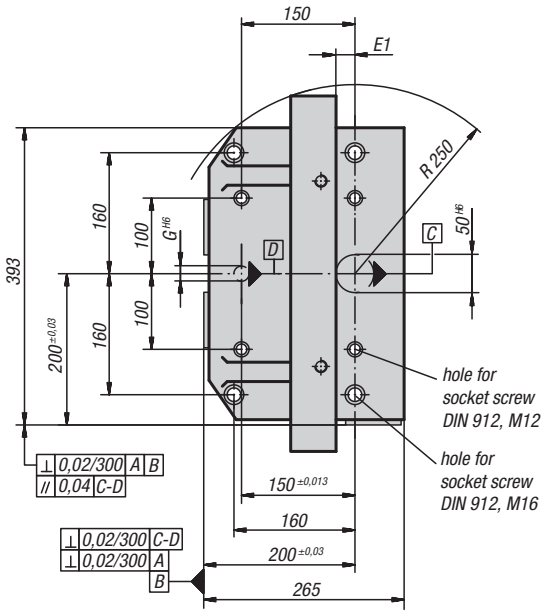


K0802.005058
K0802.125058
K0802.165058

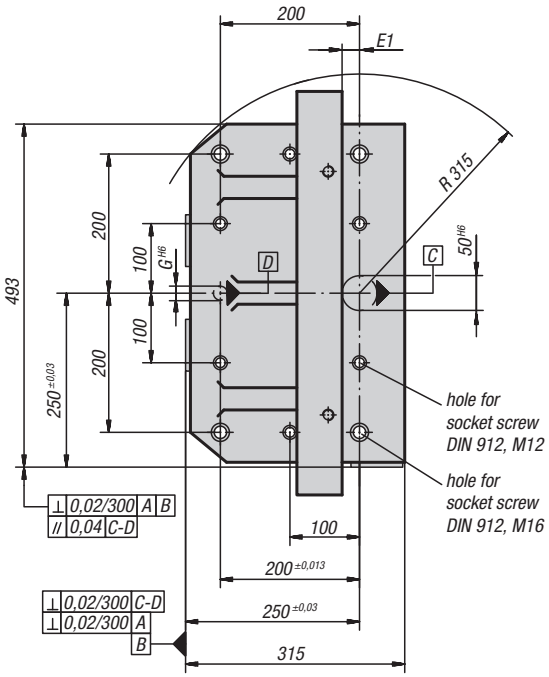


K0802.006376
K0802.166376

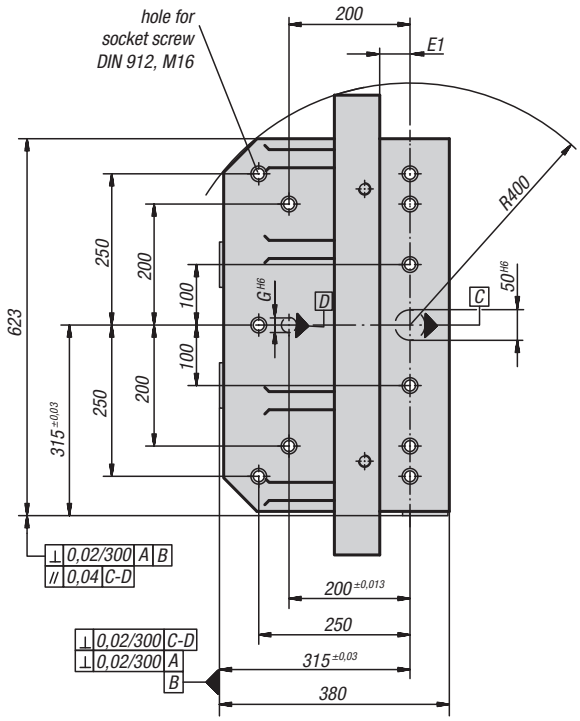


K0802.008090

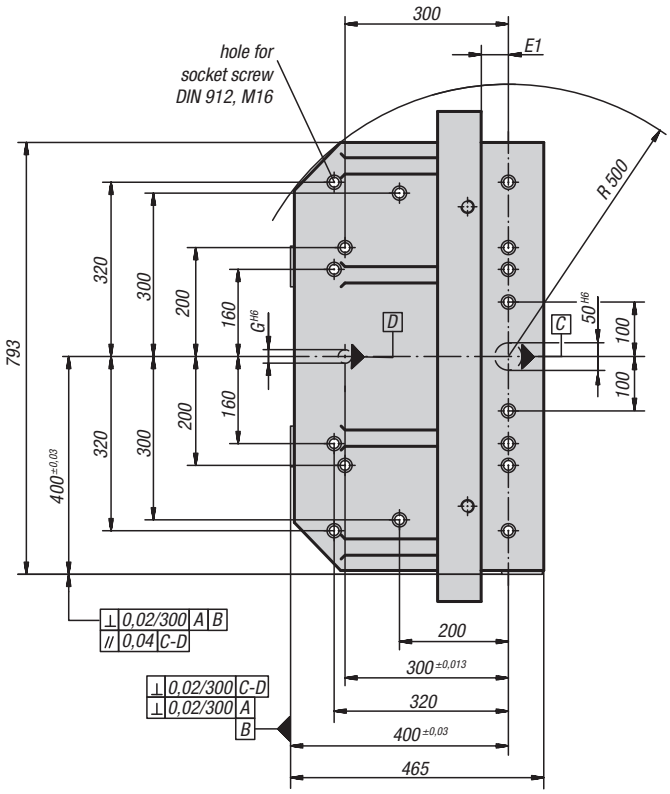

# Tombstones double-sided

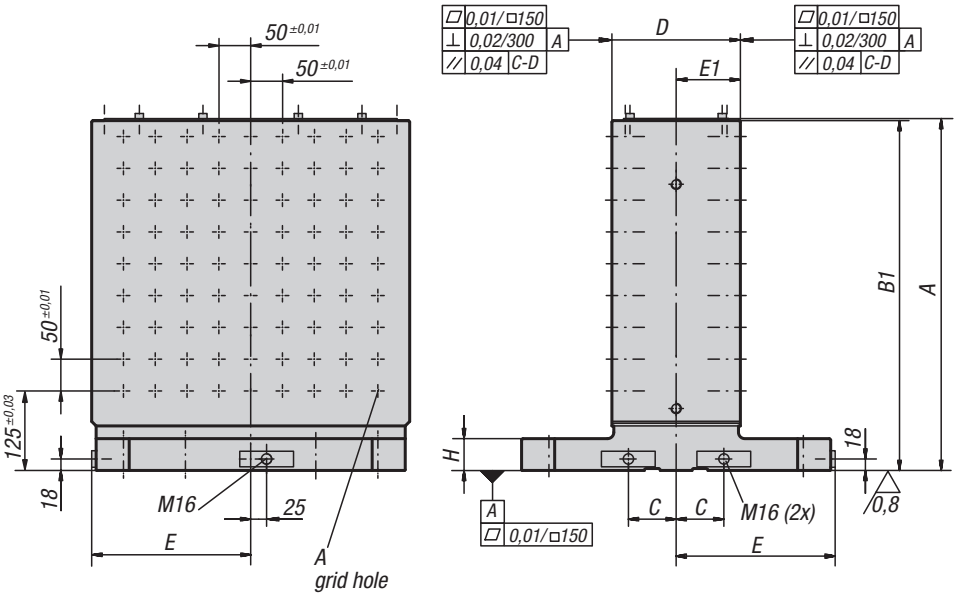


**Material:**
Meehanite cast iron GJL 300

**Version:**
Reference surfaces precision machined. The version without grid holes have 0.5 mm ±0.2 mm allowance on the clamping surfaces.

**Sample order:**
K0803.1240151

**Note:**
Grid hole pitch 50 ±0.01 mm. Grid hole plugs and ring bolts for lifting are supplied. A cover prevents the cavities filling up with swarf. Workpieces can be mounted on clamping surfaces directly or using fixtures. Code numbers on the clamping surfaces prevent mounting the wrong part on the wrong side when machining different workpieces. The double-sided tombstones are matched to pallets for machine tools acc. to DIN 55201 and JIS 6337-1980. Other dimensons on request.

## KIPP Tombstones double-sided with grid holes

| Order No. | Version | A | B | C | D | E | E1 | G | H | A locating hole | A thread | No. of grid holes | Approx. weight kg |
|---|---|---|---|---|---|---|---|---|---|---|---|---|---|
| **K0803.1240151** | with grid holes | 553 | 550 | 55 | 150±0,03 | 200 | 75±0,03 | 20 | 50 | 12F7 | M12 | 126 | 198 |
| **K0803.1250201** | with grid holes | 653 | 650 | 75 | 200±0,03 | 250 | 100±0,03 | 20 | 50 | 12F7 | M12 | 198 | 287 |
| **K0803.126325** | with grid holes | 703 | 700 | 100 | 250±0,03 | 315 | 125±0,03 | 25 | 55 | 12F7 | M12 | 264 | 482 |
| **K0803.1650201** | with grid holes | 653 | 650 | 75 | 200±0,03 | 250 | 100±0,03 | 20 | 50 | 16F7 | M16 | 198 | 285 |
| **K0803.166325** | with grid holes | 703 | 700 | 100 | 250±0,03 | 315 | 125±0,03 | 25 | 55 | 16F7 | M16 | 264 | 478 |
| **K0803.168030** | with grid holes | 803 | 800 | 135 | 300±0,03 | 400 | 150±0,03 | 25 | 60 | 16F7 | M16 | 420 | 710 |

KIRÁLY TRADING KFT H-1151 Budapest Mogyoród útja 12 - 14 tel: 061307-3801 Email:pzoli@kiralytrading.hu

# Tombstones double-sided

K0803.0040151
K0803.1240151

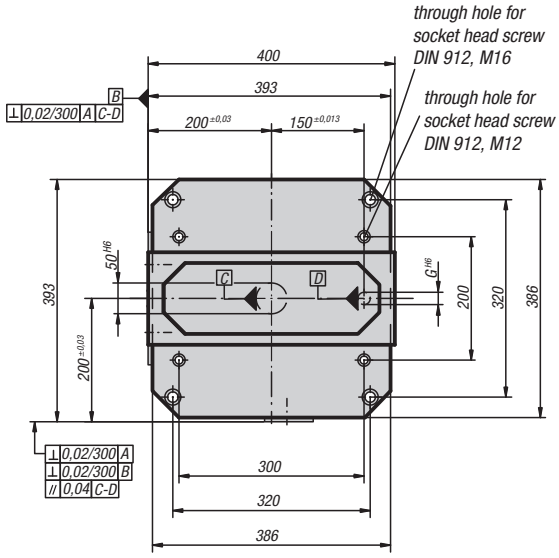


K0803.005020
K0803.0050201
K0803.1250201

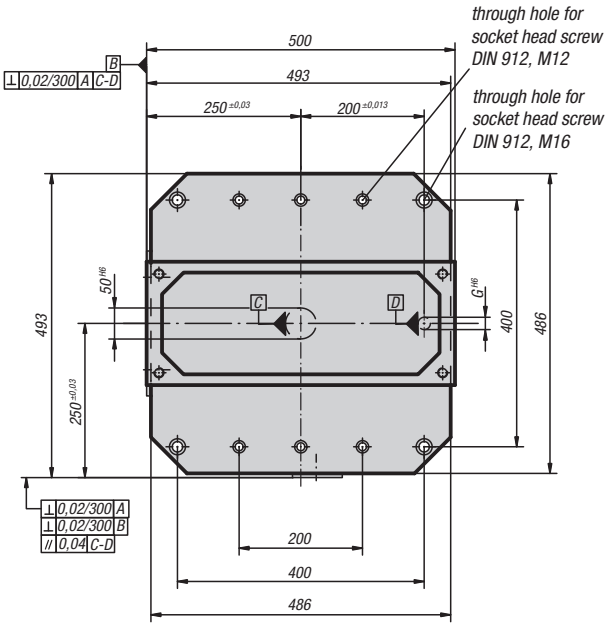


K0803.006325
K0803.0063251
K0803.1263251

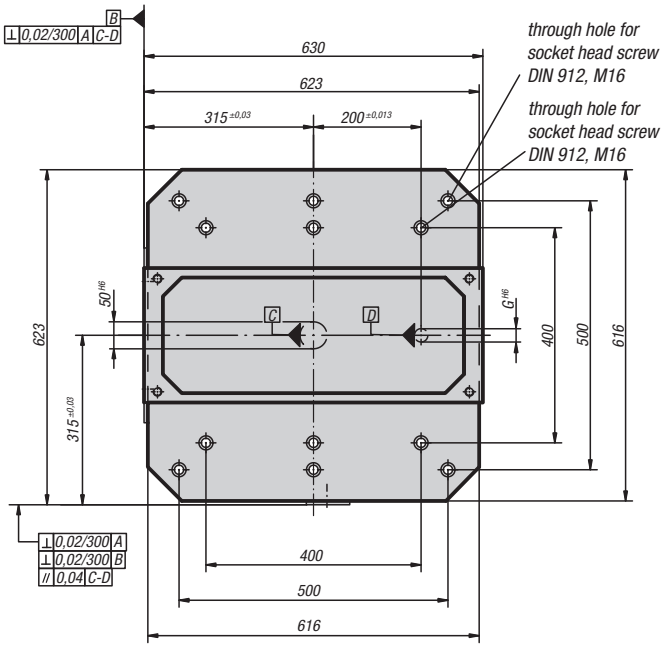


K0803.008030
K0803.168030

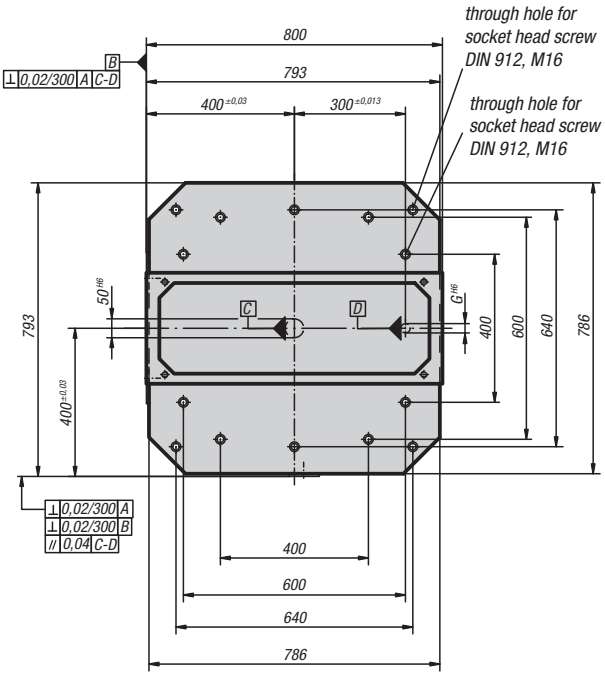


## KIPP Tombstones double-sided without grid holes

| Order No. | Version | A | B1 | C | D | E | E1 | G | H | Approx. weight kg |
|---|---|---|---|---|---|---|---|---|---|---|
| **K0803.0040151** | without grid holes | 553 | 550 | 55 | 151±0,2 | 200 | 75,5±0,2 | 20 | 50 | 202 |
| **K0803.005020** | without grid holes | 553 | 550 | 75 | 201±0,2 | 250 | 101,5±0,2 | 20 | 50 | 257 |
| **K0803.0050201** | without grid holes | 653 | 650 | 75 | 201±0,2 | 250 | 101,5±0,2 | 20 | 50 | 293 |
| **K0803.006325** | without grid holes | 703 | 700 | 100 | 251±0,2 | 315 | 125,5±0,2 | 25 | 55 | 471 |
| **K0803.0063251** | without grid holes | 803 | 800 | 100 | 251±0,2 | 315 | 125,5±0,2 | 25 | 55 | 537 |
| **K0803.008030** | without grid holes | 803 | 800 | 135 | 301±0,2 | 400 | 150,5±0,2 | 25 | 60 | 726 |

# K0804

# Tombstones window frame

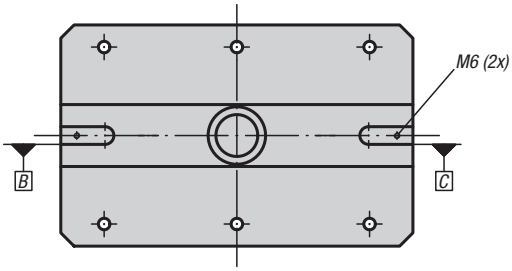

**Material:**
Meehanite cast iron GJL 300

**Version:**
Reference surfaces precision machined

**Sample order:**
K0804.123040

**Note:**
Tooling plates K0801 can be positioned and mounted on both sides of the window frame, permitting economical fixture changes. The window frames are positioned using centering pins K0856 and slot guide nuts.

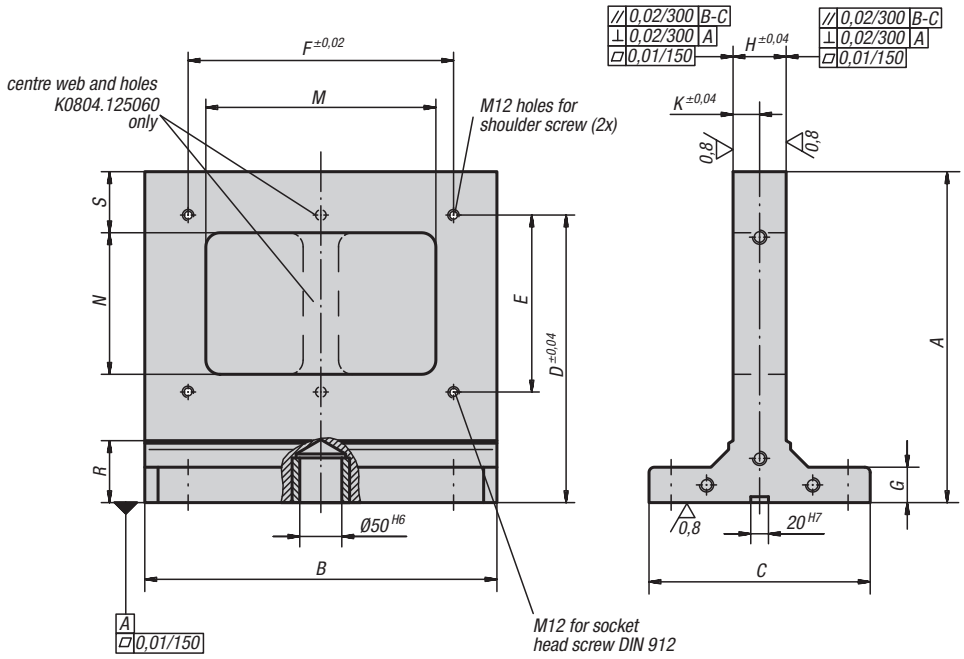


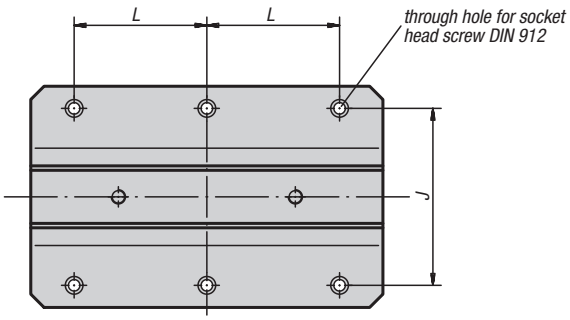


## KIPP Tombstone window frame

| Order No. | A | B | C | D | E | F | G | H | J | K | L | M | N | R | S | T |
|---|---|---|---|---|---|---|---|---|---|---|---|---|---|---|---|---|
| **K0804.123040** | 374 | 398 | 250 | 325 | 200 | 300 | 40 | 60 | 200 | 30 | 150 | 260 | 160 | 70 | 69 | M12 |
| **K0804.124050** | 474 | 498 | 250 | 425 | 300 | 400 | 40 | 70 | 200 | 35 | 200 | 360 | 260 | 70 | 69 | M12 |
| **K0804.125060** | 574 | 598 | 300 | 525 | 400 | 500 | 50 | 70 | 200 | 35 | 200 | 458 | 360 | 75 | 70 | M16 |

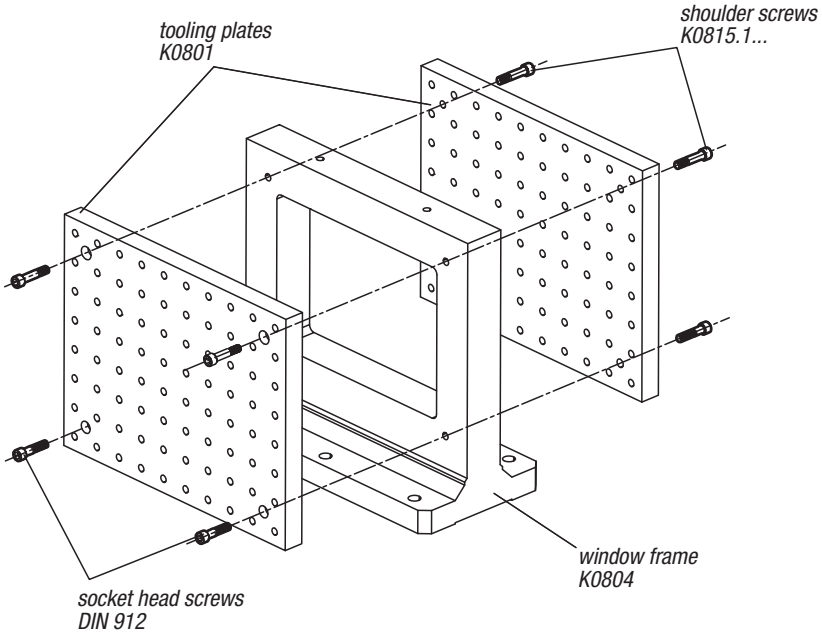
tooling plates
K0801
shoulder screws
K0815.1...
window frame
K0804
socket head screws
DIN 912

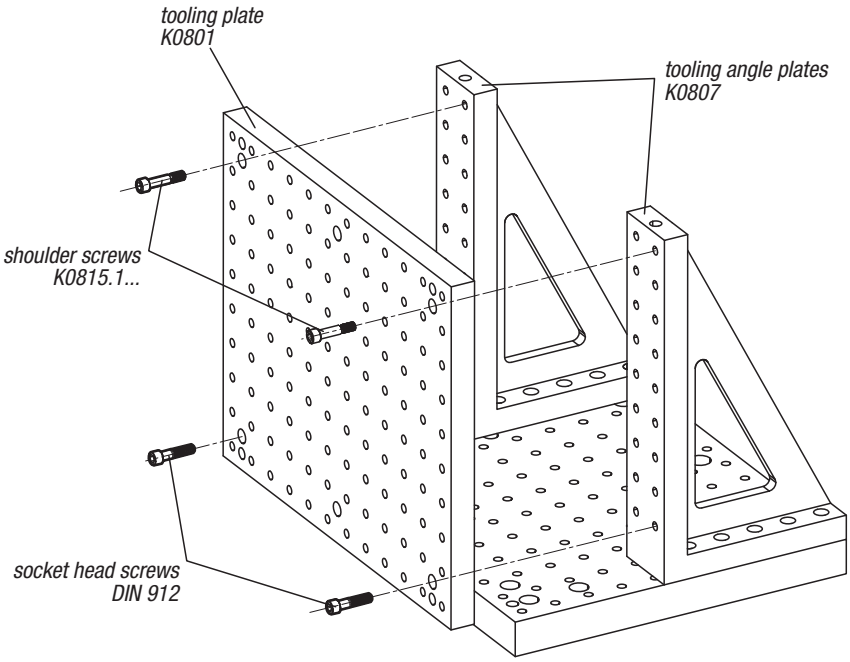
tooling plate
K0801
tooling angle plates
K0807
shoulder screws
K0815.1...
socket head screws
DIN 912

# Tombstones cube

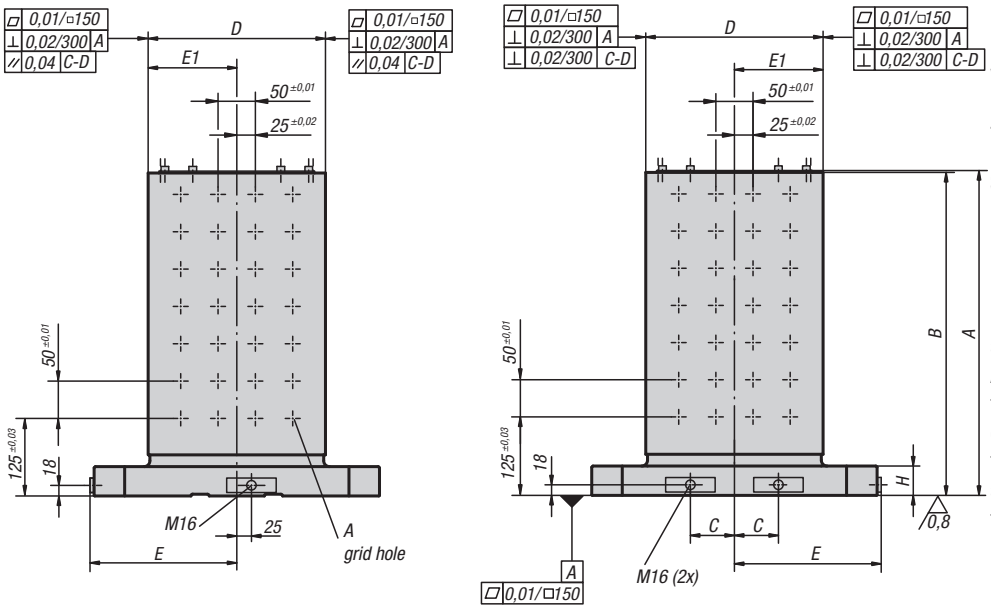


**Material:**
GJL 300

**Version:**
Reference surfaces precision machined.
The clamping surfaces have 0.5 mm allowance.

**Sample order:**
K0805.1240251

**Note:**
Grid hole pitch 50 ±0.01 mm.
Grid hole plugs and ring bolts for lifting are supplied.
A cover prevents the cavities of the tombstones filling with swarf. Workpieces can be mounted on all four clamping surfaces directly or using fixtures. Code numbers on the clamping surfaces prevent mounting the wrong part on the wrong face when different workpieces are being machined. The cube tombstones are matched to subplates for machine tools acc. to DIN 55201 and JIS 6337-1980.
Other dimensions on request.

## KIPP Cube tombstones with grid holes

| Order No. | Version | A | B | C | D | E | E1 | G | H | A locating hole | A thread | No. of grid holes kg | Approx. weight |
|---|---|---|---|---|---|---|---|---|---|---|---|---|---|
| **K0805.1240251** | with grid holes | 553 | 550 | 55 | 250±0,03 | 200 | 125±0,03 | 20 | 50 | 12 F7 | M12 | 144 | 172 |
| **K0805.1250301** | with grid holes | 653 | 650 | 75 | 300±0,03 | 250 | 150±0,03 | 20 | 50 | 12 F7 | M12 | 220 | 262 |
| **K0805.1650301** | with grid holes | 653 | 650 | 75 | 300±0,03 | 250 | 150±0,03 | 20 | 50 | 16 F7 | M16 | 220 | 258 |
| **K0805.126335** | with grid holes | 703 | 700 | 100 | 350±0,03 | 315 | 175±0,03 | 25 | 55 | 12 F7 | M12 | 288 | 381 |
| **K0805.166335** | with grid holes | 703 | 700 | 100 | 350±0,03 | 315 | 175±0,03 | 25 | 55 | 16 F7 | M16 | 288 | 377 |
| **K0805.168050** | with grid holes | 803 | 800 | 135 | 500±0,03 | 400 | 250±0,03 | 25 | 60 | 16 F7 | M16 | 504 | 715 |

KIRÁLY TRADING KFT H-1151 Budapest Mogyoród útja 12 - 14 tel: 061307-3801 Email:pzoli@kiralytrading.hu

# Tombstones cube

K0805.0040251
K0805.1240251

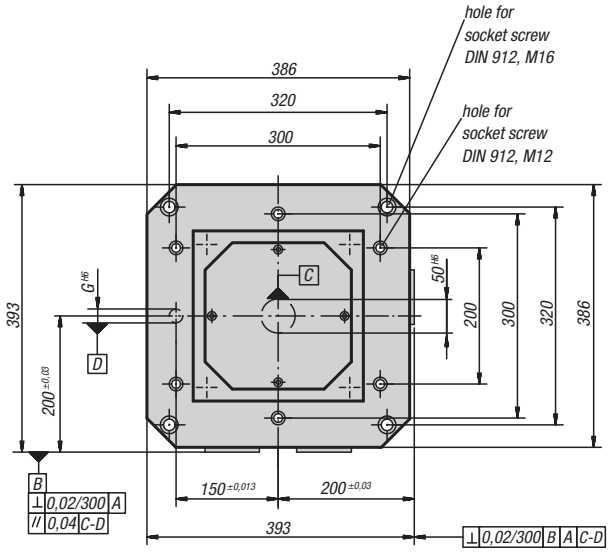


K0805.005030
K0805.0050301
K0805.1250301
K0805.1650301

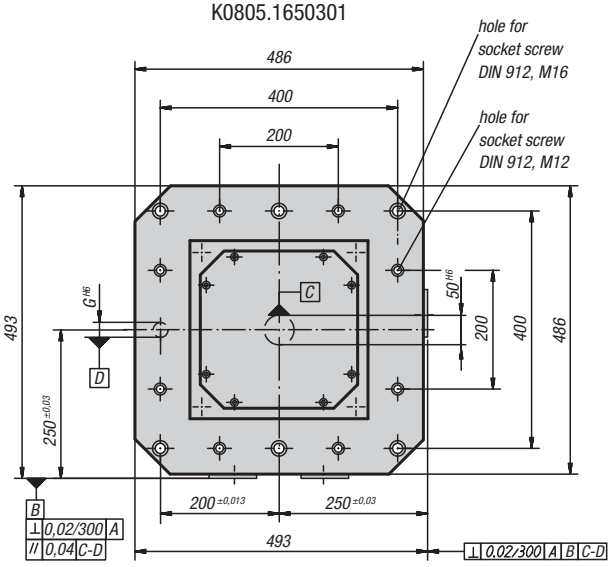


K0805.006335
K0805.0063351
K0805.126335
K0805.166335

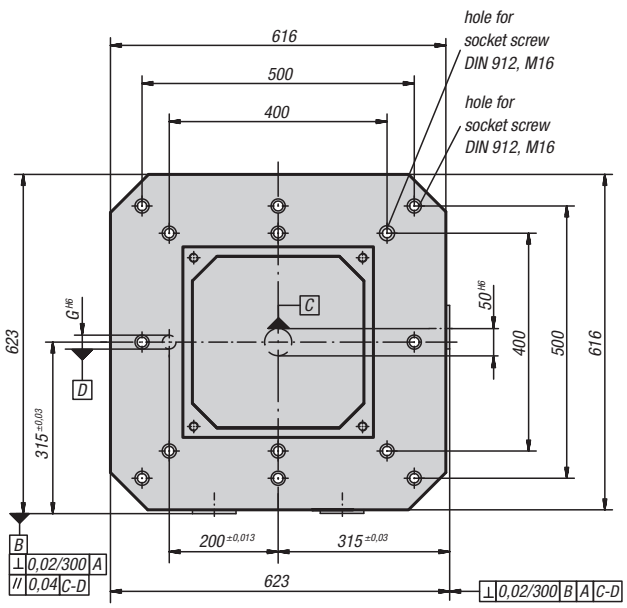


K0805.008050
K0805.168050

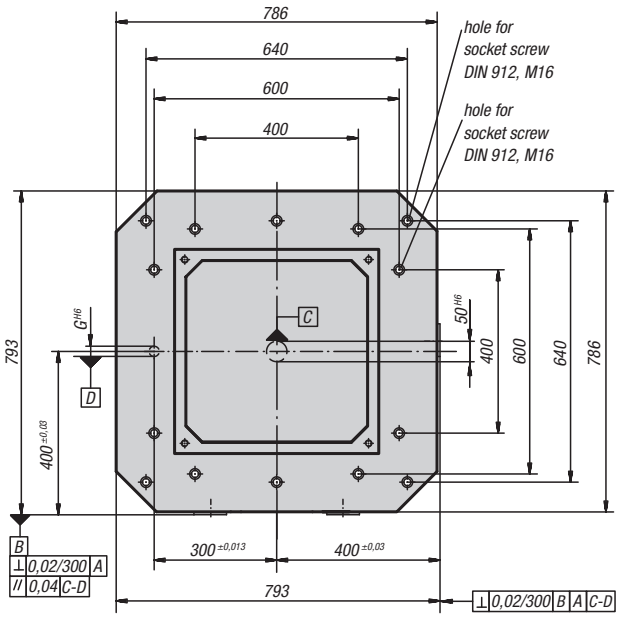


## KIPP Cube tombstones without grid holes

| Order No. | Version | A | B | C | D | E | E1 | G | H | Approx. weight kg |
|---|---|---|---|---|---|---|---|---|---|---|
| K0805.005030 | without grid holes | 553 | 550 | 75 | 301 ±0,2 | 250 | 150,5 ±0,2 | 20 | 50 | 237 |
| K0805.006335 | without grid holes | 703 | 700 | 100 | 351 ±0,2 | 315 | 175,5 ±0,2 | 25 | 55 | 389 |
| K0805.008050 | without grid holes | 803 | 800 | 135 | 501 ±0,2 | 400 | 250,5 ±0,2 | 25 | 60 | 744 |
| K0805.0040251 | without grid holes | 553 | 550 | 55 | 251 ±0,2 | 200 | 125,5 ±0,2 | 20 | 50 | 176 |
| K0805.0050301 | without grid holes | 653 | 650 | 75 | 301 ±0,2 | 250 | 150,5 ±0,2 | 20 | 50 | 268 |
| K0805.0063351 | without grid holes | 803 | 800 | 100 | 351 ±0,2 | 315 | 175,5 ±0,2 | 25 | 55 | 425 |

# K0806

## Subplates

K0806.084040

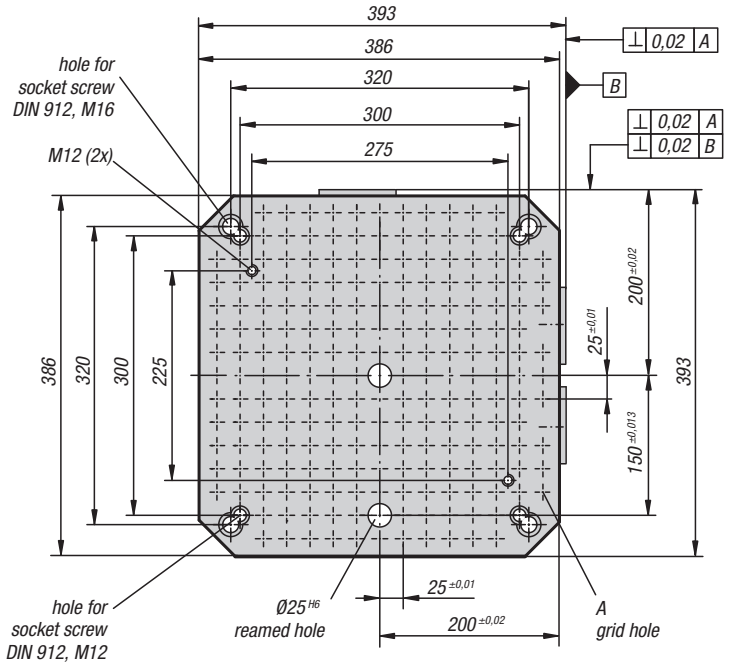


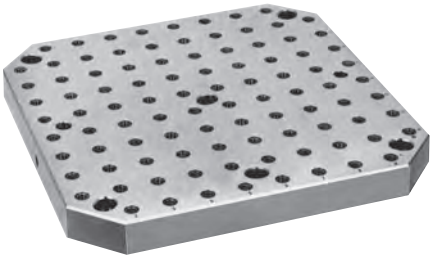

**Material:**
Grey cast iron GJL 250

**Version:**
Mounting surfaces ground

**Sample order:**
K0806.005050

**Note:**
Grid hole pitch 25 ±0,01 mm or 50 ±0,01 mm. Grid hole plugs and lifting eye bolts are supplied. These subplates conform to subplates for machine tools according to DIN 55201 and JIS 6337-1980. KIPP subplates are also available without grid holes. See order numbers without a value for „A“ (xx/-) and no grid holes. Other dimensons on request.

K0806.124040

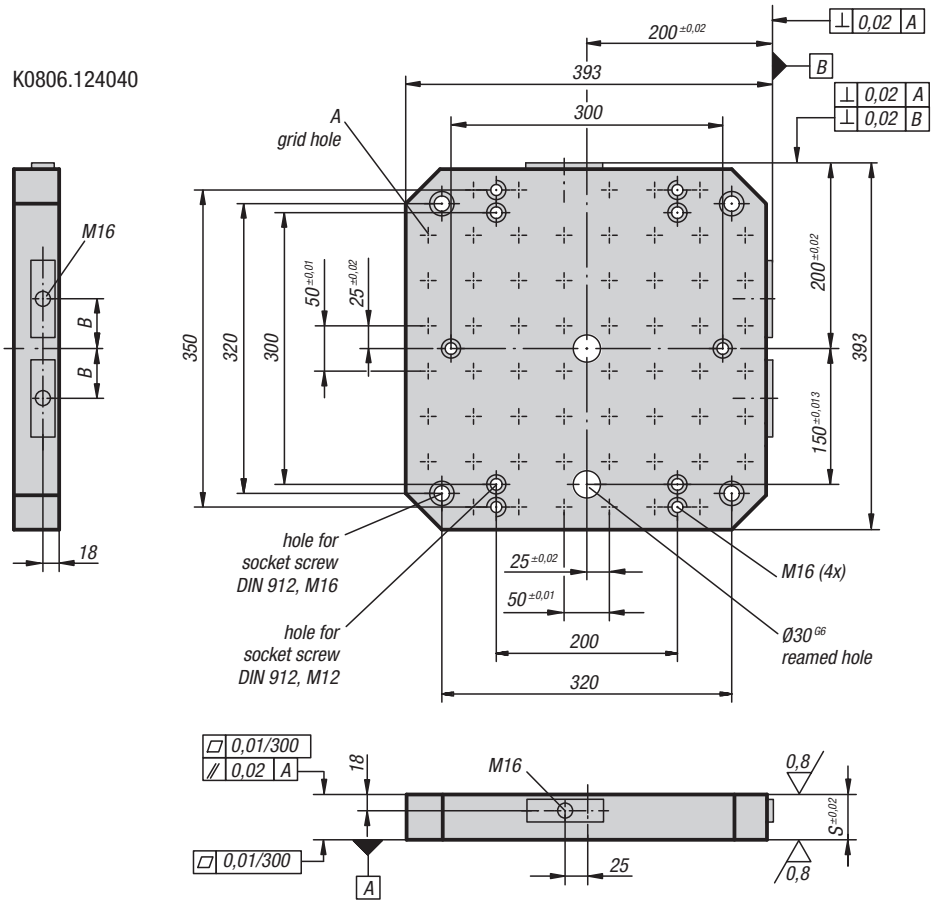


### KIPP Subplates

| Order No. with grid holes | Order No. without grid holes | A locating hole | A thread | B | S | No. of grid holes |
|---|---|---|---|---|---|---|
| **K0806.084040** | - | 12 F7 | M8 | 55 | 40 | 204 |
| **K0806.124040** | **K0806.004040** | 12 F7/- | M12/- | 55 | 50 | 59/- |
| **K0806.125050** | **K0806.005050** | 12 F7/- | M12/- | 75 | 50 | 93/- |
| **K0806.126363** | **K0806.006363** | 12 F7/- | M12/- | 100 | 50 | 139/- |
| **K0806.168080** | **K0806.008080** | 12 F7/- | M16/- | 135 | 60 | 237/- |

KIRÁLY TRADING KFT H-1151 Budapest Mogyoród útja 12 - 14 tel: 061307-3801 Email:pzoli@kiralytrading.hu

# Subplates

K0806.125050

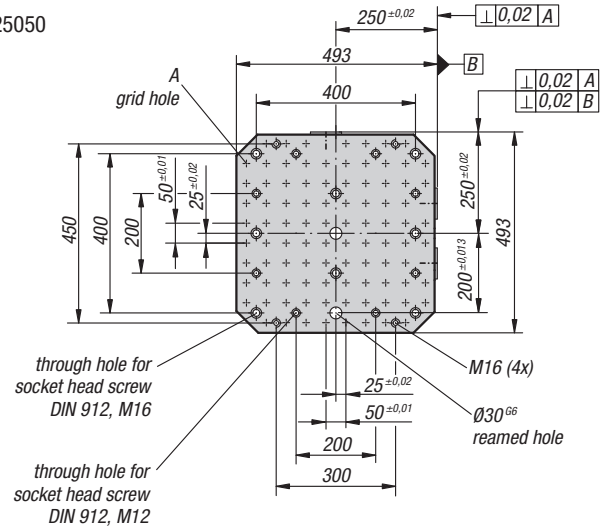


K0806.126363

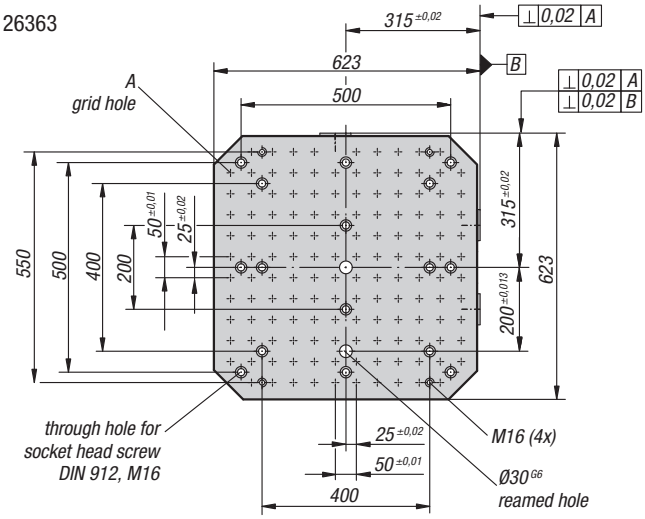


K0806.168080

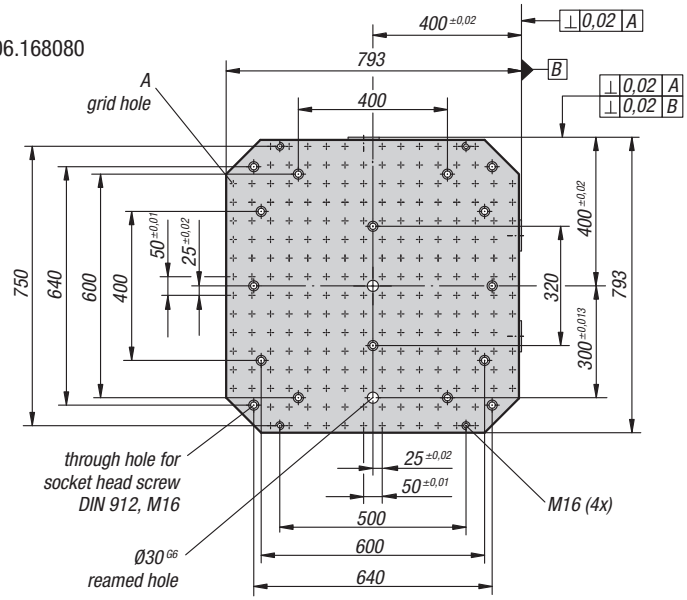

# K0806

## Subplates

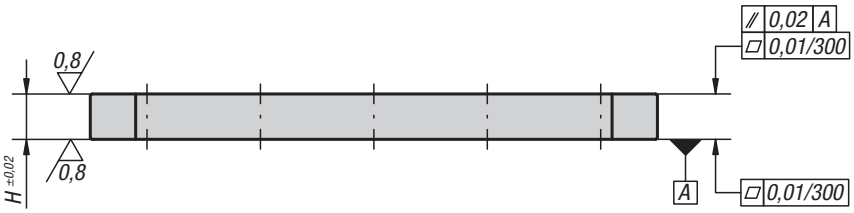


**Material:**
Grey cast iron GJL 250

**Version:**
Mounting surfaces ground

**Sample order:**
K0806.084050

**Note:**
Grid hole pitch 25 ±0.01 mm. Grid hole plugs and ring bolts for lifting are supplied. The subplates conform to subplates for machine tools acc. to DIN 55201.

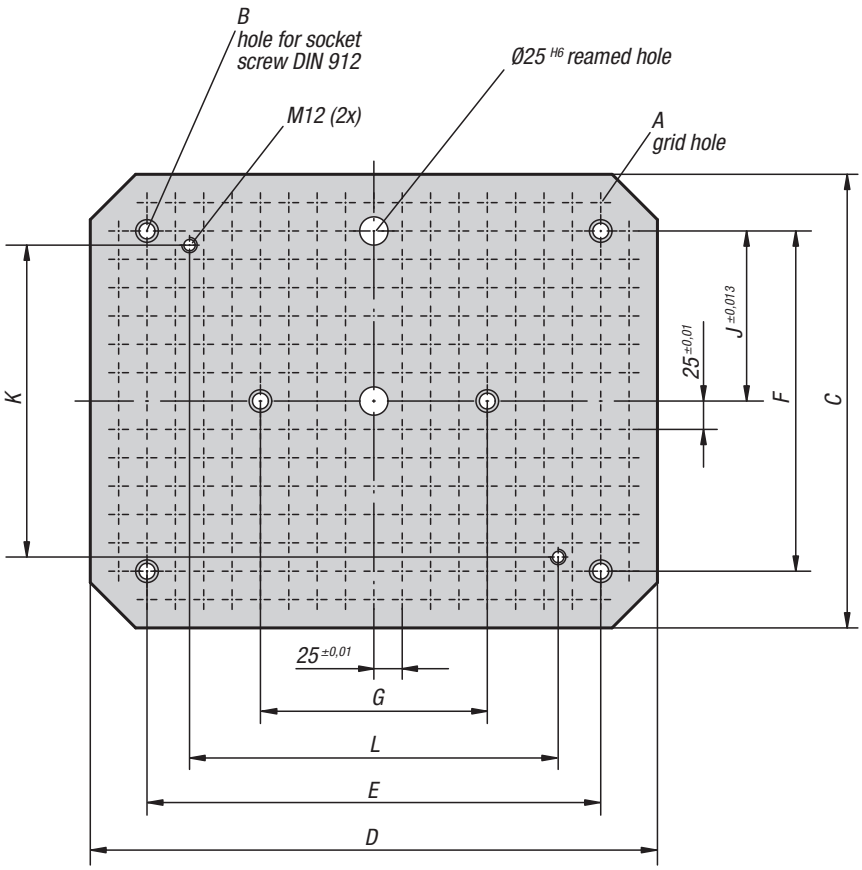


### KIPP Subplates

| Order No. | A locating hole | A thread | B | C | D | E | F | G | H | J | K | L | No. of grid holes | Approx. weight kg |
|---|---|---|---|---|---|---|---|---|---|---|---|---|---|---|
| **K0806.084050** | 12 H6 | M8 | M12 | 400 | 500 | 400 | 300 | 200 | 40 | 150 | 275 | 325 | 273 | 49 |

# K0806

## Subplates

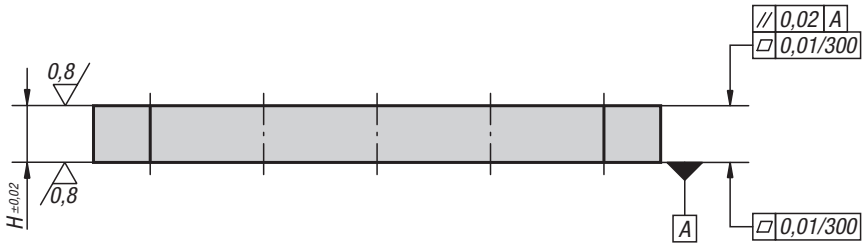


**Material:**
Grey cast iron GJL 250

**Version:**
Mounting surfaces ground

**Sample order:**
K0806.124050

**Note:**
Grid hole pitch 50 ±0.01 mm.
Grid hole plugs and ring bolts for lifting are supplied.
The subplates conform to subplates for machine tools acc. to DIN 55201.

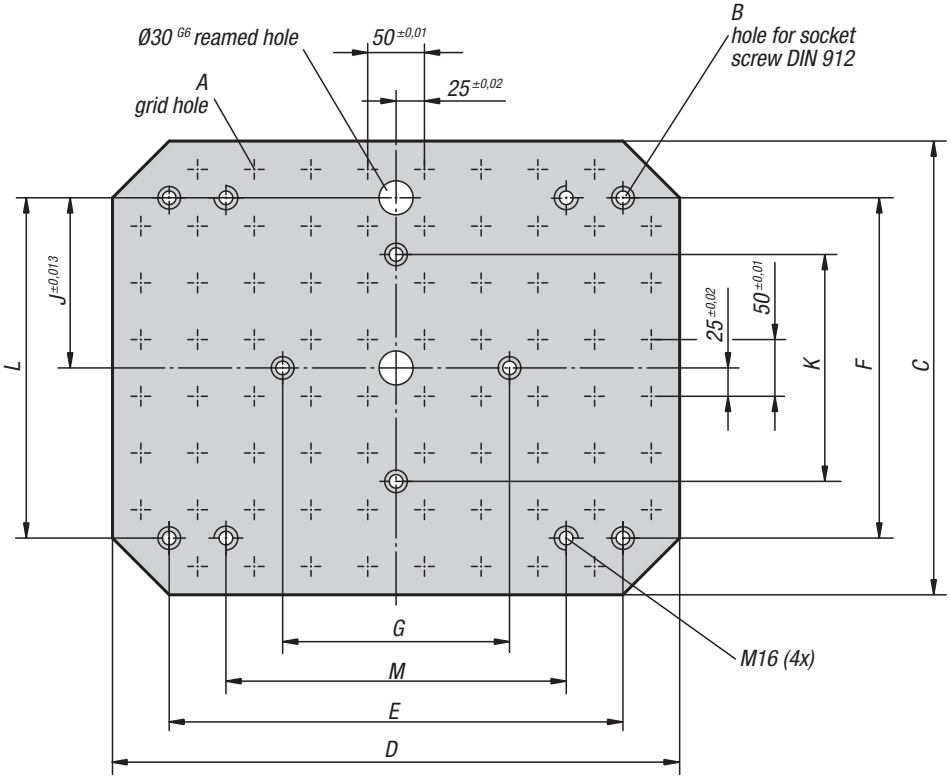


### KIPP Subplates

| Order No. | A locating hole | A thread | B Hole for | C | D | E | F | G | H | J | K | L | M | No. of grid holes | Approx. weight kg |
|---|---|---|---|---|---|---|---|---|---|---|---|---|---|---|---|
| **K0806.124050** | 12 F7 | M12 | M12 | 400 | 500 | 400 | 300 | 200 | 50 | 150 | 200 | 300 | 300 | 76 | 67 |
| **K0806.125063** | 12 F7 | M12 | M12 | 500 | 630 | 400 | 400 | 400 | 50 | 200 | 200 | 400 | 500 | 116 | 107 |
| **K0806.165063** | 16 F7 | M16 | M12 | 500 | 630 | 400 | 400 | 400 | 50 | 200 | 200 | 400 | 500 | 116 | 105 |
| **K0806.166380** | 16 F7 | M16 | M16 | 630 | 800 | 600 | 400 | 400 | 50 | 200 | 200 | 500 | 700 | 188 | 205 |

KIRÁLY TRADING KFT H-1151 Budapest Mogyoród útja 12 - 14 tel: 061307-3801 Email:pzoli@kiralytrading.hu

# Tooling angle plates

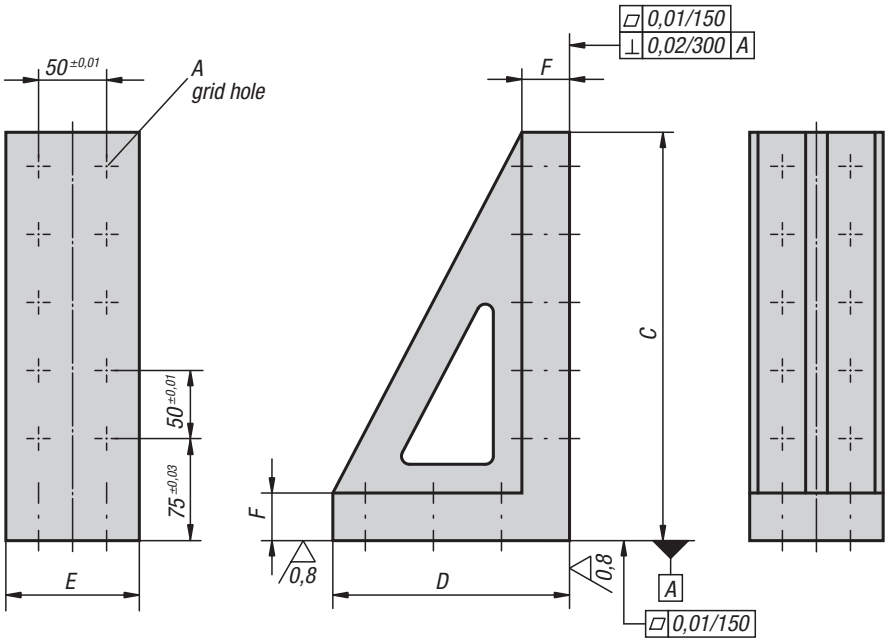


**Material:**
GJL 300

**Version:**
Support and mounting surfaces precision machined

**Sample order:**
K0807.121030

**Note:**
Grid hole pitch 50 ±0.01 mm.
Tooling angle plates are versatile elements for vertical positioning of workpieces. These tooling angle plates can also be used as supports for tooling plates K0801. Shoulder screws K0815 are used to position and fasten the tooling angle plates to the tooling plates K0800.

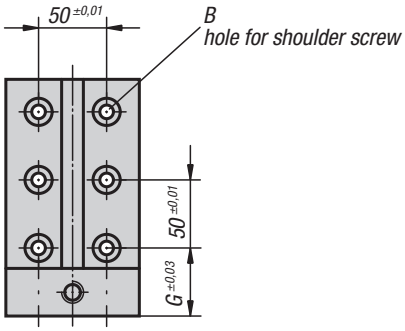


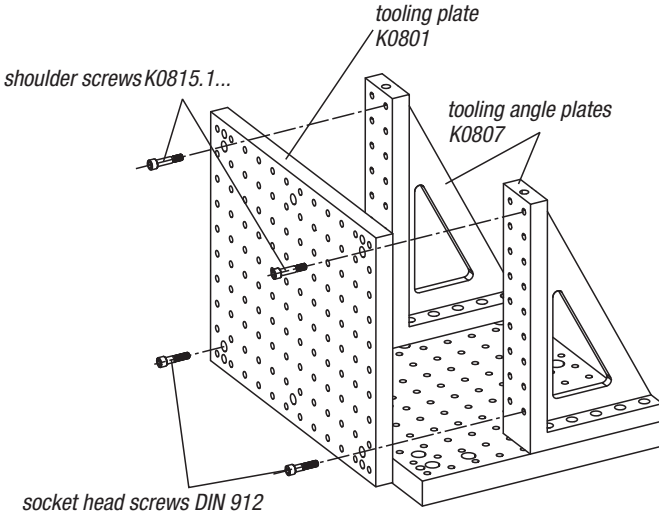


## KIPP Tooling angle plates

| Order No. | A locating hole | A thread | B Ø for shoulder screw | C | D | E | F | G | No. of grid holes | No. of mounting holes | Approx. weight kg |
|---|---|---|---|---|---|---|---|---|---|---|---|
| **K0807.121030** | 12 F7 | M12 | 12 F7 | 300 | 174 | 98 | 35 | 50 | 10 | 6 | 12 |
| **K0807.121040** | 12 F7 | M12 | 12 F7 | 400 | 224 | 98 | 35 | 50 | 14 | 8 | 17 |
| **K0807.121050** | 12 F7 | M12 | 12 F7 | 500 | 274 | 98 | 35 | 50 | 18 | 10 | 23 |
| **K0807.161030** | 16 F7 | M16 | 16 F7 | 300 | 179 | 98 | 40 | 55 | 10 | 6 | 13 |
| **K0807.161040** | 16 F7 | M16 | 16 F7 | 400 | 229 | 98 | 40 | 55 | 14 | 8 | 19 |
| **K0807.161050** | 16 F7 | M16 | 16 F7 | 500 | 279 | 98 | 40 | 55 | 18 | 10 | 25 |

KIRÁLY TRADING KFT H-1151 Budapest Mogyoród útja 12 - 14 tel: 061307-3801 Email:pzoli@kiralytrading.hu

# Tooling angle plates

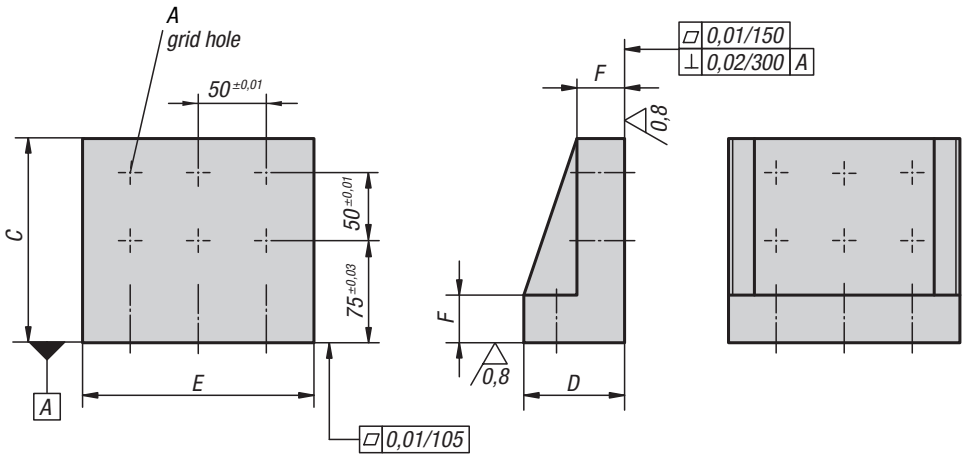


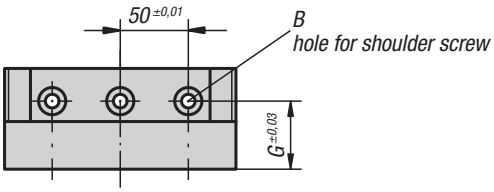


**Material:**
GJL 300

**Version:**
Support and mounting surfaces precision machined

**Sample order:**
K0808.121715

**Note:**
Grid hole pitch 50 ±0.01 mm.
Tooling angle plates are versatile elements for vertical positioning of workpieces.
Shoulder screws are used for fastening the angle plates:
Angle plates K0808.121715 to K0808.121760 - shoulder screws K0815.12055.
Angle plates K0808.161715 to K0808.161725 - shoulder screws K0815.16075.

## KIPP Tooling angle plates

| Order No. | A locating hole | A thread | B Ø for shoulder screw | C | D | E | F | G | No. of grid holes | No. of mounting holes | Approx. weight kg |
|---|---|---|---|---|---|---|---|---|---|---|---|
| **K0808.121715** | 12 F7 | M12 | 12 F7 | 150 | 74 | 170 | 35 | 50 | 6 | 3 | 8 |
| **K0808.121725** | 12 F7 | M12 | 12 F7 | 250 | 124 | 170 | 35 | 50 | 12 | 4 | 14 |
| **K0808.121760** | 12 F7 | M12 | 12 F7 | 600 | 324 | 170 | 35 | 50 | 33 | 12 | 52 |
| **K0808.161715** | 16 F7 | M16 | 16 F7 | 150 | 79 | 170 | 40 | 55 | 6 | 3 | 9 |
| **K0808.161725** | 16 F7 | M16 | 16 F7 | 250 | 129 | 170 | 40 | 55 | 12 | 4 | 16 |

KIRÁLY TRADING KFT H-1151 Budapest Mogyoród útja 12 - 14 tel: 061307-3801 Email:pzoli@kiralytrading.hu

# Tooling blocks

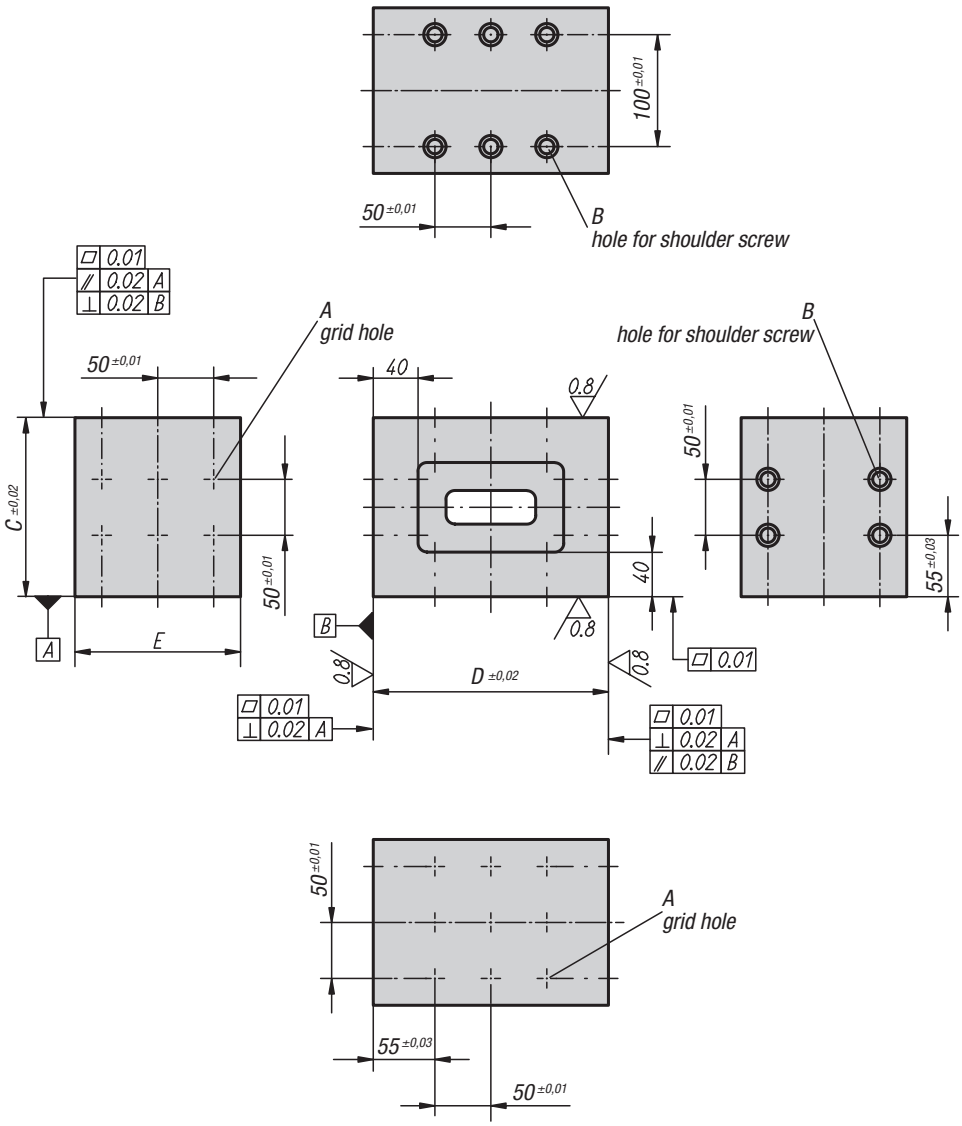


**Material:**
GJL 300

**Version:**
Support and mounting surfaces ground

**Sample order:**
K0809.090121621

**Note:**
Grid hole pitch 50 ±0,01 mm.
Tooling blocks can be used for mounting low workpieces or as small bases. They can also be used as parallel gauge blocks for inspection work.
Tooling blocks K0809.090121621 and K0809.090122126 mounted with shoulder screws K0815.112065.
Tooling blocks K0809.090161621 and K0809.090162126 mounted with shoulder screws K0815.16075.

## KIPP Tooling blocks

| Order No. | A locating hole | A thread | B Ø for shoulder screw | C | D | E | No. of grid holes | No. of mounting holes | Approx. weight kg |
|---|---|---|---|---|---|---|---|---|---|
| **K0809.090121621** | 12 F7 | M12 | 12 F7 | 160 | 210 | 148 | 15 | 10 | 26 |
| **K0809.090122126** | 12 F7 | M12 | 12 F7 | 210 | 260 | 148 | 21 | 14 | 37 |
| **K0809.090161621** | 16 F7 | M16 | 16 F7 | 160 | 210 | 148 | 15 | 10 | 25 |
| **K0809.090162126** | 16 F7 | M16 | 16 F7 | 210 | 260 | 148 | 21 | 14 | 36 |

# K0809

# Mini tooling blocks

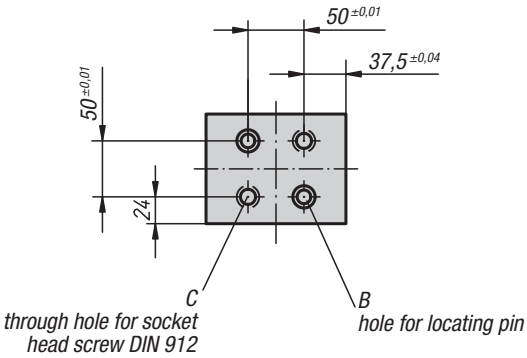


**Material:**
GJL 300

**Version:**
Support and mounting surfaces ground

**Sample order:**
K0809.09512125

**Note:**
Mini tooling blocks are positioned using 2 locating pins K0817 and secured with 2 DIN 912 socket head screws. They can be used as stops or support and add-on elements.

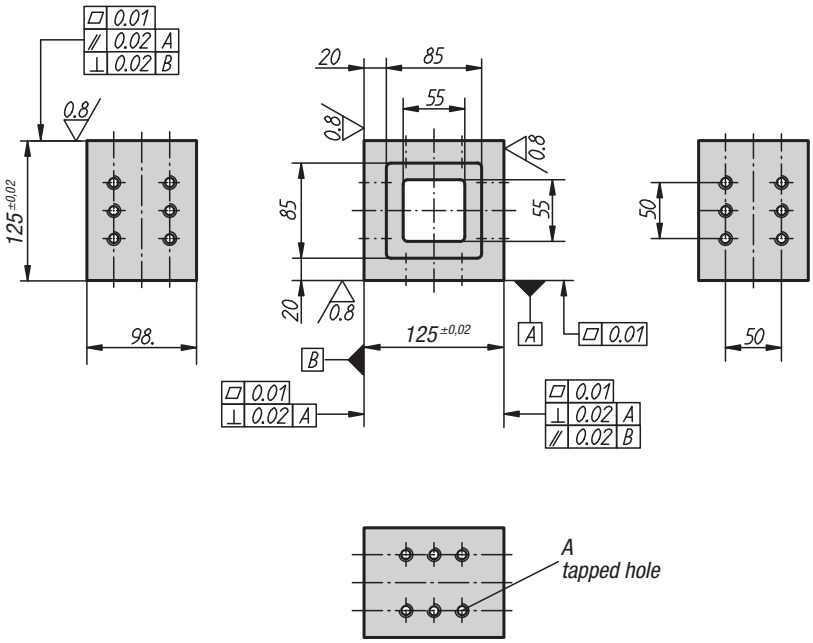


## KIPP Mini tooling blocks

| Order No. | A | B | C thru hole for | suitable locating pins | Approx. weight kg |
|---|---|---|---|---|---|
| **K0809.09512125** | M12 | 12 F7 | M12 | K0817.12 | 6,3 |
| **K0809.09516125** | M16 | 16 F7 | M16 | K0817.16 | 6,2 |

KIRÁLY TRADING KFT H-1151 Budapest Mogyoród útja 12 - 14 tel: 061307-3801 Email:pzoli@kiralytrading.hu

# Fastening blocks

Form M

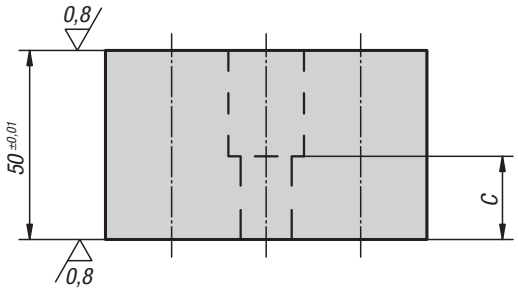


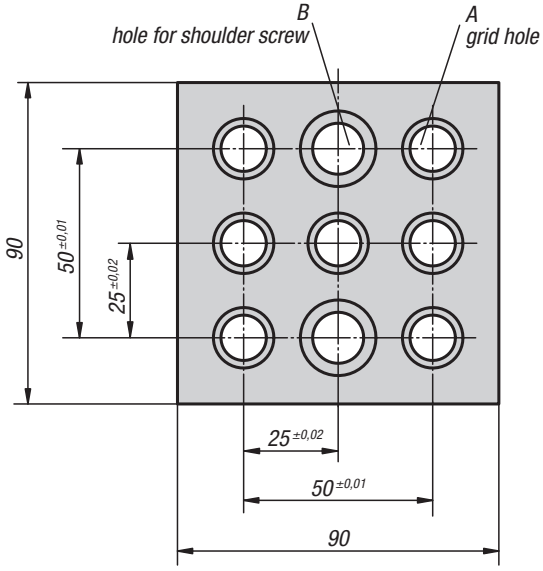


**Material:**
Carbon steel.

**Version:**
Black oxidised.
Contact faces ground.

**Sample order:**
K0810.12112050

**Note:**
Fastening blocks are used as risers for all system elements which have no movable seating faces - these include locating supports K0816, vertical V-blocks K0819.600.
They also allow positioning and fastening elements within a 50 ±0.01 mm pitch (see application example).

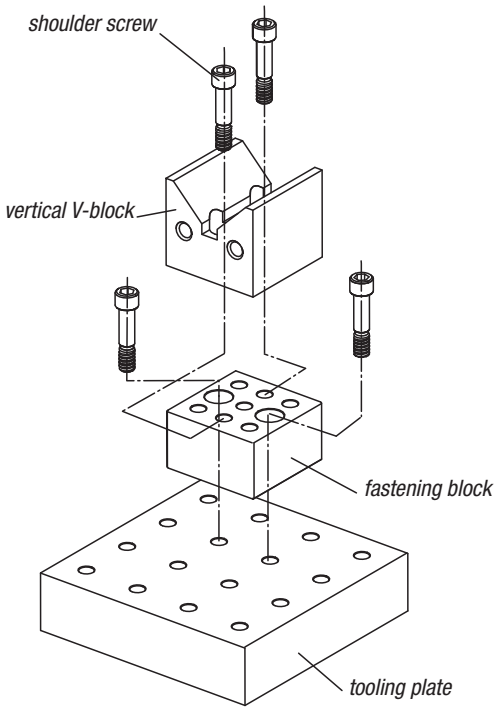


## KIPP Fastening blocks Form M

| Order No. | A locating hole | A thread | B Ø for shoulder screw | C | No. of grid holes | No. of mounting holes | Suitable shoulder screw | Approx. weight kg |
|---|---|---|---|---|---|---|---|---|
| **K0810.12112050** | 12 F7 | M12 | 12 F7 | 22 | 7 | 2 | K0815.112055 | 2,39 |
| **K0810.12116050** | 16 F7 | M16 | 16 F7 | 26 | 7 | 2 | K0815.116055 | 2,08 |

KIRÁLY TRADING KFT H-1151 Budapest Mogyoród útja 12 - 14 tel: 061307-3801 Email:pzoli@kiralytrading.hu

# Precision riser blocks

Form D

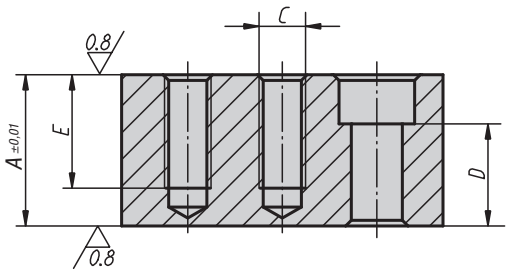


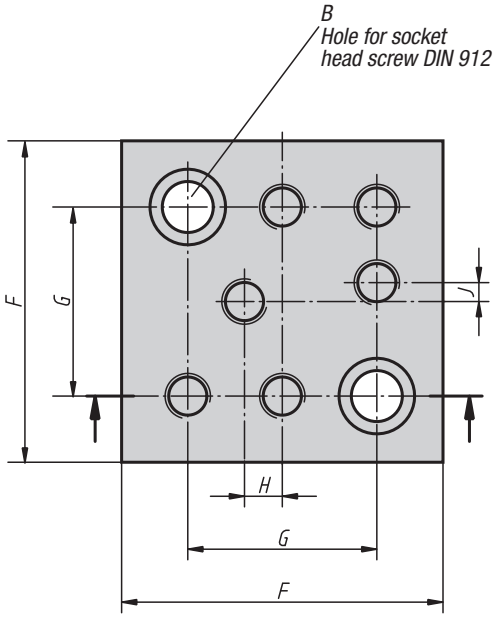


**Material:**
Carbon steel.

**Version:**
Black oxidised.
Contact faces ground.

**Sample order:**
K0811.14012025

**Note:**
Riser blocks are used to achieve a certain support height. The additional tapped holes in the risers are for mounting further fixture elements.

## KIPP Precision riser blocks Form D

| Order No. | A | B Hole for | C | D | E | F | G | H | J | Approx. weight kg |
|---|---|---|---|---|---|---|---|---|---|---|
| **K0811.14012025** | 25 | M12 | M12 | 12 | 25 | 85 | 50 | 10 | 5 | 1,2 |
| **K0811.14012032** | 32 | M12 | M12 | 19 | 32 | 85 | 50 | 10 | 5 | 1,55 |
| **K0811.14012040** | 40 | M12 | M12 | 27 | 30 | 85 | 50 | 10 | 5 | 1,99 |
| **K0811.14012050** | 50 | M12 | M12 | 37 | 30 | 85 | 50 | 10 | 5 | 2,48 |
| **K0811.14016025** | 25 | M16 | M16 | 8 | 25 | 85 | 50 | 10 | 5 | 1,03 |
| **K0811.14016032** | 32 | M16 | M16 | 15 | 32 | 85 | 50 | 10 | 5 | 1,34 |
| **K0811.14016040** | 40 | M16 | M16 | 23 | 35 | 85 | 50 | 10 | 5 | 1,7 |
| **K0811.14016050** | 50 | M16 | M16 | 33 | 35 | 85 | 50 | 10 | 5 | 2,2 |

KIRÁLY TRADING KFT H-1151 Budapest Mogyoród útja 12 - 14 tel: 061307-3801 Email:pzoli@kiralytrading.hu

# Precision riser blocks

Form M

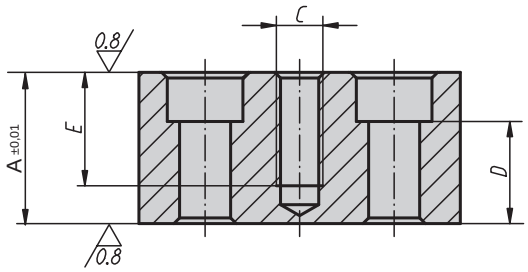


**Material:**
Carbon steel.

**Version:**
Black oxidised.
Contact faces ground.

**Sample order:**
K0811.14112025

**Note:**
Riser blocks are used to achieve a certain support height. The additional tapped holes in the risers are for mounting further fixture elements.

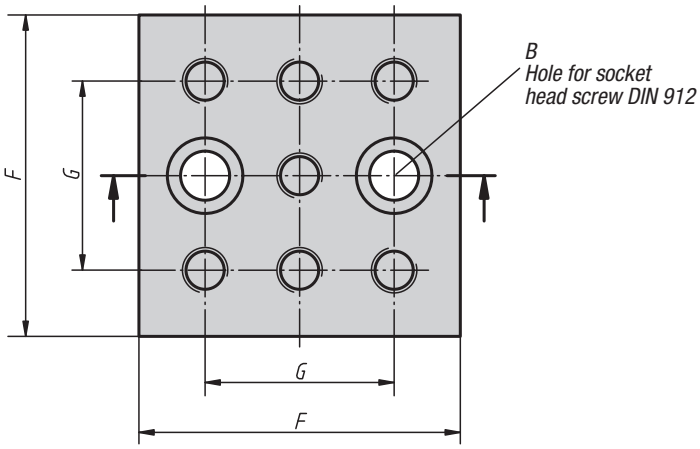


## KIPP Precision riser blocks Form M

| Order No. | A | B Hole for | C | D | E | F | G | Approx. weight kg |
|---|---|---|---|---|---|---|---|---|
| **K0811.14112025** | 25 | M12 | M12 | 12 | 25 | 85 | 50 | 1,18 |
| **K0811.14112032** | 32 | M12 | M12 | 19 | 32 | 85 | 50 | 1,52 |
| **K0811.14112040** | 40 | M12 | M12 | 27 | 30 | 85 | 50 | 1,94 |
| **K0811.14112050** | 50 | M12 | M12 | 37 | 30 | 85 | 50 | 2,44 |
| **K0811.14116025** | 25 | M16 | M16 | 8 | 25 | 85 | 50 | 0,99 |
| **K0811.14116032** | 32 | M16 | M16 | 15 | 32 | 85 | 50 | 1,29 |
| **K0811.14116040** | 40 | M16 | M16 | 23 | 35 | 85 | 50 | 1,63 |
| **K0811.14116050** | 50 | M16 | M16 | 33 | 35 | 85 | 50 | 2,06 |

KIRÁLY TRADING KFT H-1151 Budapest Mogyoród útja 12 - 14 tel: 061307-3801 Email:pzoli@kiralytrading.hu

# Precision riser blocks

Form E

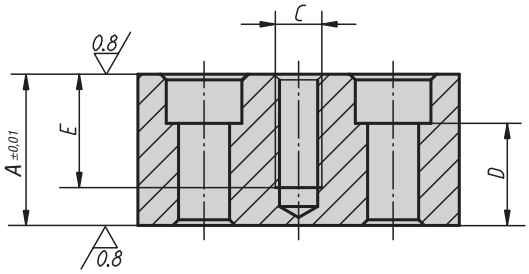


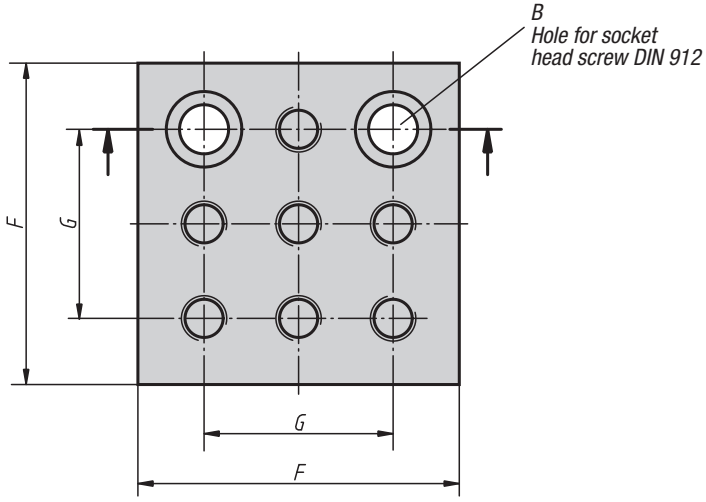


**Material:**
Carbon steel.

**Version:**
Black oxidised.
Contact faces ground.

**Sample order:**
K0811.14212025

**Note:**
Riser blocks are used to achieve a certain support height. The additional tapped holes in the risers are for mounting further fixture elements.

## KIPP Precision riser blocks Form E

| Order No. | A | B Hole for | C | D | E | F | G | Approx. weight kg |
|---|---|---|---|---|---|---|---|---|
| **K0811.14212025** | 25 | M12 | M12 | 12 | 25 | 85 | 50 | 1,18 |
| **K0811.14212032** | 32 | M12 | M12 | 19 | 25 | 85 | 50 | 1,53 |
| **K0811.14212040** | 40 | M12 | M12 | 27 | 30 | 85 | 50 | 1,94 |
| **K0811.14212050** | 50 | M12 | M12 | 37 | 30 | 85 | 50 | 2,46 |
| **K0811.14216025** | 25 | M16 | M16 | 8 | 25 | 85 | 50 | 0,99 |
| **K0811.14216032** | 32 | M16 | M16 | 15 | 32 | 85 | 50 | 1,285 |
| **K0811.14216040** | 40 | M16 | M16 | 23 | 35 | 85 | 50 | 1,63 |
| **K0811.14216050** | 50 | M16 | M16 | 33 | 35 | 85 | 50 | 2,06 |

KIRÁLY TRADING KFT H-1151 Budapest Mogyoród útja 12 - 14 tel: 061307-3801 Email:pzoli@kiralytrading.hu

# Round positioning plates

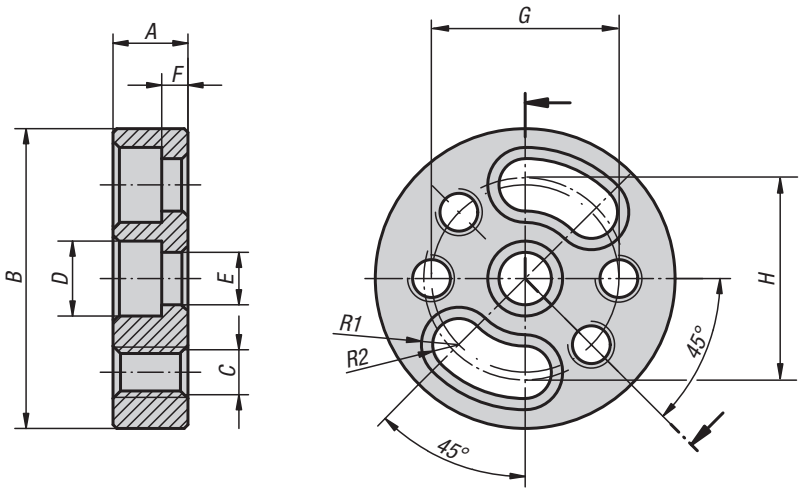


**Material:**
Carbon steel.

**Version:**
Black oxidised.

**Sample order:**
K0812.24212020

**Note:**
Round positioning plates allow clamps such as K0853.920 and K0853.930 to be positioned against the workpiece at an angle of e.g. 30°. The rack plates CL K0853.940 are mounted on the round positioning plate as intermediate adapters, the clamps are fitted and rotated to the correct position.

## KIPP Round positioning plates

| Order No. | A | B | C | D | E | F | G | H | R1 | R2 | Approx. weight kg |
|---|---|---|---|---|---|---|---|---|---|---|---|
| **K0812.24212020** | 20 | 80 | M12 | 20 | 14 | 7 | 50 | 50 | 10 | 7 | 0,485 |
| **K0812.24216025** | 25 | 100 | M16 | 26 | 18 | 7 | 50 | 70,7 | 13 | 9 | 0,86 |

KIRÁLY TRADING KFT H-1151 Budapest Mogyoród útja 12 - 14 tel: 061307-3801 Email:pzoli@kiralytrading.hu

# Riser blocks

Form H

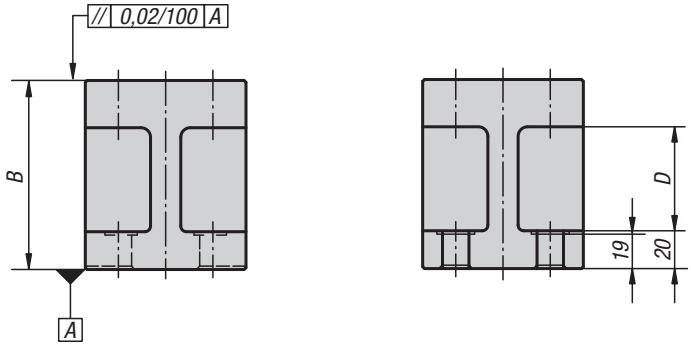


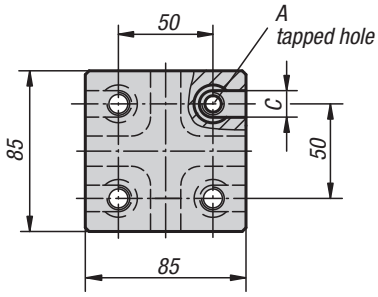


**Material:**
GJL 300

**Version:**
Black oxidised.

**Sample order:**
K0811.33012100

**Note:**
Form H riser blocks are mounted using DIN 912 socket head screws.

## KIPP Riser blocks Form H

| Order No. | A | B | C | D | Approx. weight kg |
|---|---|---|---|---|---|
| **K0811.33012100** | M12 | 100 | 14 | 55 | 3,155 |
| **K0811.33012125** | M12 | 125 | 14 | 80 | 3,695 |
| **K0811.33016100** | M16 | 100 | 18 | 55 | 2,96 |
| **K0811.33016125** | M16 | 125 | 18 | 80 | 3,49 |

# K0813

## Adjustable stops

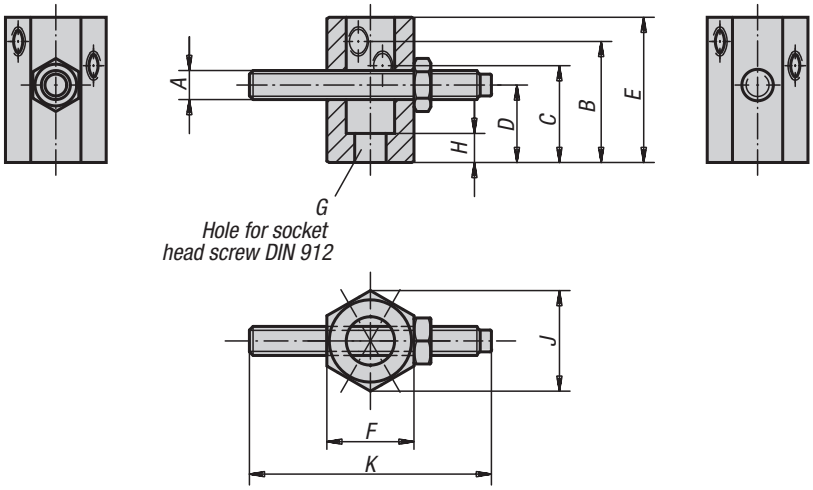

**Material:**
Body and set screw carbon steel.

**Version:**
Body black oxidised.
Set screw tempered and black oxidised.

**Sample order:**
K0813.16063

**Note:**
The adjustable stops have three tapped holes to accept the set screws.

### KIPP Adjustable stops

| Order No. | A | B | C | D | E | F | G hole for | H | J | K |
|---|---|---|---|---|---|---|---|---|---|---|
| **K0813.08032** | M8 | 32 | 25 | 20 | 40 | 21 | M8 | 7 | 24,3 | 50 |
| **K0813.12050** | M12 | 50 | 40 | 32 | 60 | 36 | M12 | 12 | 41,6 | 100 |
| **K0813.16063** | M16 | 63 | 50 | 40 | 80 | 46 | M16 | 16 | 53,1 | 100 |

# K0814

## Locating sleeve

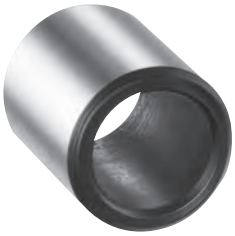

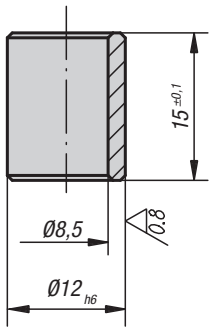


**Material:**
Tool steel

**Version:**
Hardened and black oxidised.
Toleranced diameter ground.

**Sample order:**
K0814.44008012

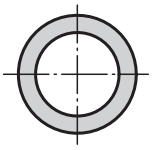

### KIPP Locating sleeve

| Order No. | Approx. weight kg |
|---|---|
| **K0814.44008012** | 0,007 |

# K0815

## Shoulder screws

Form A

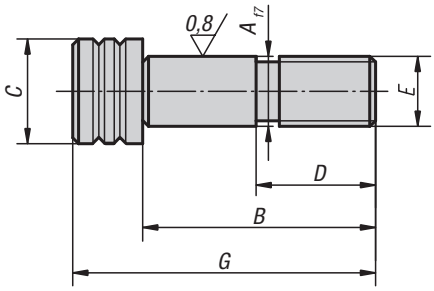


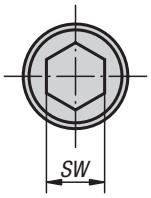

**Material:**
Carbon steel.

**Version:**
Tempered, black oxidised.
Precision diameters ground.

**Sample order:**
K0815.112045

### KIPP Shoulder screws Form A

| Order No. | A | B | C | D | E | G | SW |
|---|---|---|---|---|---|---|---|
| K0815.112045 | 12 | 45 | 18 | 22 | M12 | 57 | 10 |
| K0815.112055 | 12 | 55 | 18 | 22 | M12 | 67 | 10 |
| K0815.112065 | 12 | 65 | 18 | 22 | M12 | 77 | 10 |
| K0815.112075 | 12 | 75 | 18 | 22 | M12 | 87 | 10 |
| K0815.116055 | 16 | 55 | 24 | 25 | M16 | 71 | 14 |
| K0815.116065 | 16 | 65 | 24 | 25 | M16 | 81 | 14 |
| K0815.116075 | 16 | 75 | 24 | 25 | M16 | 91 | 14 |

# K0815

## Shoulder screws

Form B

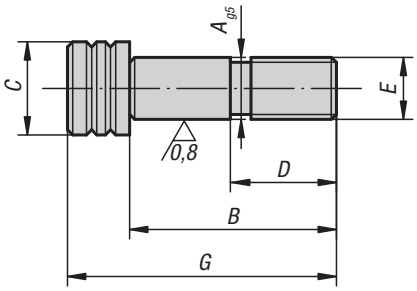


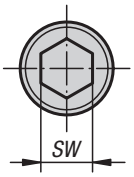

**Material:**
Carbon steel.

**Version:**
Tempered, black oxidised.
Precision diameters ground.

**Sample order:**
K0815.12065

### KIPP Shoulder screws Form B

| Order No. | A | B | C | D | E | G | SW |
|---|---|---|---|---|---|---|---|
| K0815.12045 | 12 | 45 | 18 | 22 | M12 | 57 | 10 |
| K0815.12055 | 12 | 55 | 18 | 22 | M12 | 67 | 10 |
| K0815.12065 | 12 | 65 | 18 | 22 | M12 | 77 | 10 |
| K0815.12075 | 12 | 75 | 18 | 22 | M12 | 87 | 10 |
| K0815.16055 | 16 | 55 | 24 | 25 | M16 | 71 | 14 |
| K0815.16065 | 16 | 65 | 24 | 25 | M16 | 81 | 14 |
| K0815.16075 | 16 | 75 | 24 | 25 | M16 | 91 | 14 |

KIRÁLY TRADING KFT H-1151 Budapest Mogyoród útja 12 - 14 tel: 061307-3801 Email:pzoli@kiralytrading.hu

# Locating supports

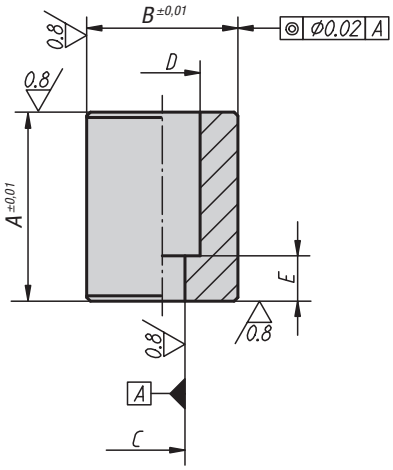


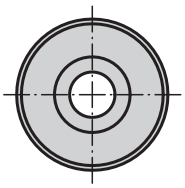

**Material:**
Carbon steel.

**Version:**
Tempered.
OD and support faces ground.

**Sample order:**
K0816.08020

**Note:**
Depending on the system (M8, M12, M16), the locating supports are positioned and secured using shoulder screws or locating sleeves with socket head screw.

## KIPP Locating supports

| Order No. | A | B | C<br>Ø for<br>locating sleeve | D | E | Suitable<br>locating sleeve | Approx.<br>weight<br>kg |
|---|---|---|---|---|---|---|---|
| **K0816.08032** | 32 | 25 | 12 H6 | 16 | 9 | K0814.44008012 | 0,085 |
| **K0816.08050** | 50 | 25 | 12 H6 | 16 | 9 | K0814.44008012 | 0,125 |
| **K0816.08063** | 63 | 25 | 12 H6 | 16 | 9 | K0814.44008012 | 0,155 |

## KIPP Locating supports

| Order No. | A | B | C<br>Ø for<br>shoulder screw | D | E | Suitable<br>shoulder screw | Approx.<br>weight<br>kg |
|---|---|---|---|---|---|---|---|
| **K0816.12025** | 25 | 40 | 12 H7 | 20 | 12 | K0815.112045 | 0,2 |
| **K0816.12050** | 50 | 40 | 12 H7 | 20 | 12 | K0815.12045 | 0,385 |
| **K0816.12075** | 75 | 40 | 12 H7 | 20 | 12 | K0815.12045 | 0,57 |
| **K0816.12100** | 100 | 50 | 12 H7 | 20 | 22 | K0815.12055 | 1,325 |
| **K0816.16050** | 50 | 50 | 16 H7 | 26 | 15 | K0815.16055 | 0,6 |
| **K0816.16075** | 75 | 50 | 16 H7 | 26 | 15 | K0815.16055 | 0,88 |
| **K0816.16100** | 100 | 50 | 16 H7 | 26 | 25 | K0815.16065 | 1,185 |
| **K0816.16125** | 125 | 50 | 16 H7 | 26 | 25 | K0815.16065 | 1,455 |

# K0817

## Removable locating pins

Forms A and C

Form A

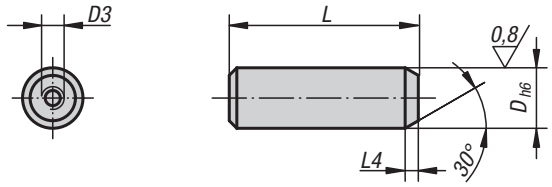


Form C

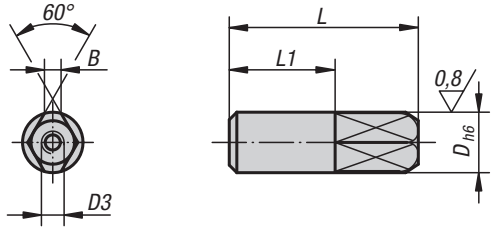

**Material:**
Tool steel

**Version:**
Hardened and ground (HRC 56 +2).

**Sample order:**
K0817.12

**Note:**
The locating pins can be easily removed with an extractor.

### KIPP Locating pins Form A and C

| Order No. Form A | Order No. Form C | D | D3 | L | L1 | L4 | B |
|---|---|---|---|---|---|---|---|
| **K0817.08** | **K0817.082** | 8 | M3 | 25 | -/14 | 3/- | -/2,2 |
| **K0817.10** | **K0817.102** | 10 | M3 | 30 | -/17 | 3/- | -/3 |
| **K0817.12** | **K0817.122** | 12 | M5 | 34 | -/20 | 4/- | -/3,5 |
| **K0817.16** | **K0817.162** | 16 | M5 | 42 | -/26 | 4/- | -/5 |
| **K0817.20** | **K0817.202** | 20 | M5 | 47 | -/30 | 5/- | -/6 |
| **K0817.25** | **K0817.252** | 25 | M5 | 49 | -/30 | 5/- | -/8 |

# K0818

## Removable locating pins

Forms B and D

Form B

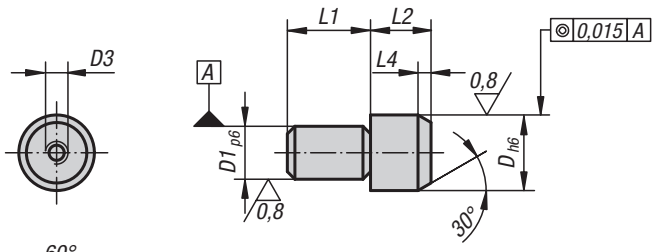


Form D

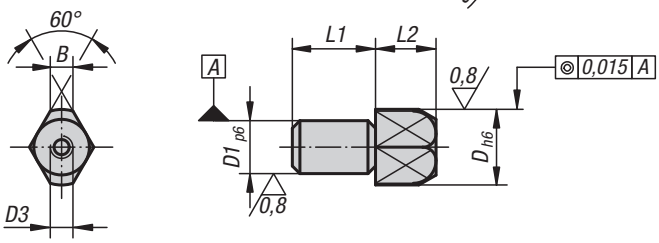

**Material:**
Tool steel.

**Version:**
Hardened and ground (HRC 55-60).

**Sample order:**
K0818.20

**Note:**
Locating pins can be easily removed with an extractor.

### KIPP Locating pins Form B and D

| Order No. Form B | Order No. Form D | D | D1 | D3 | L1 | L2 | L4 | B |
|---|---|---|---|---|---|---|---|---|
| **K0818.10** | **K0818.102** | 10 | 7 | M3 | 11 | 11 | 3 | -/3 |
| **K0818.12** | **K0818.122** | 12 | 8 | M5 | 13 | 12 | 4 | -/3,5 |
| **K0818.16** | **K0818.162** | 16 | 12 | M5 | 18 | 14 | 4,5 | -/5 |
| **K0818.20** | **K0818.202** | 20 | 14 | M5 | 22 | 15 | 5 | -/6 |
| **K0818.22** | **K0818.222** | 22 | 16 | M5 | 22 | 17 | 5 | -/7 |
| **K0818.25** | **K0818.252** | 25 | 18 | M5 | 25 | 17 | 5 | -/8 |

# K0350

## Locating pins

with ball-end Form A

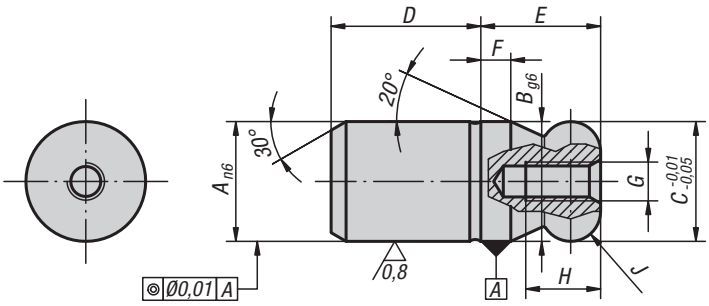

**Material:**
Tool steel or stainless steel 1.4305.

**Version:**
Steel hardened and ground.
Stainless steel ground and kolsterised.

**Sample order:**
K0350.12

**Note:**
Ball end locating pins are specially designed to ease the locating process. The tendency to jam, caused by the locating hole not being at right angles to the pin or by the pushing force not being parallel to the pin axis, is minimized by the ball-end form. (See the illustration for K0351 Form B)

### KIPP Locating pins with ball-end Form A

| Order No. steel | Order No. stainless steel | A | B | C | D | E | F | G | H | J |
|---|---|---|---|---|---|---|---|---|---|---|
| K0350.08 | K0350.508 | 8 | 8 | 8 | 10 | 8 | 2 | M3 | 6 | R 2 |
| K0350.10 | K0350.510 | 10 | 10 | 10 | 13 | 10 | 2,5 | M3 | 6 | R 2,5 |
| K0350.12 | K0350.512 | 12 | 12 | 12 | 15 | 12 | 3 | M4 | 8 | R 3 |
| K0350.16 | K0350.516 | 16 | 16 | 16 | 20 | 16 | 4 | M5 | 10 | R 4 |
| K0350.20 | K0350.520 | 20 | 20 | 20 | 25 | 20 | 5 | M5 | 10 | R 5 |
| K0350.25 | - | 25 | 25 | 25 | 25 | 25 | 6 | M5 | 10 | R 6 |
| K0350.30 | - | 30 | 30 | 30 | 30 | 30 | 8 | M6 | 12 | R 8 |
| K0350.40 | - | 40 | 40 | 40 | 40 | 40 | 10 | M6 | 12 | R 10 |
| K0350.50 | - | 50 | 50 | 50 | 50 | 50 | 12 | M6 | 12 | R 12 |

# K0351

## Locating pins

with ball-end Form B

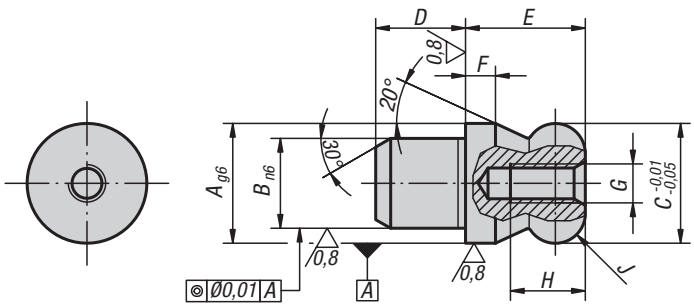

mounting illustration

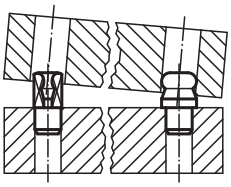

**Material:**
Tool steel or stainless steel 1.4305.

**Version:**
Steel hardened and ground.
Stainless steel ground and kolsterised.

**Sample order:**
K0351.20

**Note:**
Ball end locating pins are specially designed to ease the locating process. The tendency to jam, caused by the locating hole not being at right angles to the pin or by the pushing force not being parallel to the pin axis, is minimized by the ball-end form (see illustration).

### KIPP Locating pins with ball-end Form B

| Order No. steel | Order No. stainless steel | A | B | C | D | E | F | G | H | J |
|---|---|---|---|---|---|---|---|---|---|---|
| K0351.10 | K0351.510 | 10 | 7 | 10 | 7 | 10 | 2,5 | M3 | 6 | R 2,5 |
| K0351.12 | K0351.512 | 12 | 8 | 12 | 8 | 12 | 3 | M4 | 8 | R 3 |
| K0351.16 | K0351.516 | 16 | 12 | 16 | 12 | 16 | 4 | M5 | 10 | R 4 |
| K0351.20 | K0351.520 | 20 | 14 | 20 | 14 | 20 | 5 | M5 | 10 | R 5 |
| K0351.22 | - | 22 | 16 | 22 | 16 | 22 | 5,5 | M5 | 10 | R 5,5 |
| K0351.25 | - | 25 | 18 | 25 | 18 | 25 | 6 | M5 | 10 | R 6 |

# K0350

## Locating pins

with flattened ball-end Form C

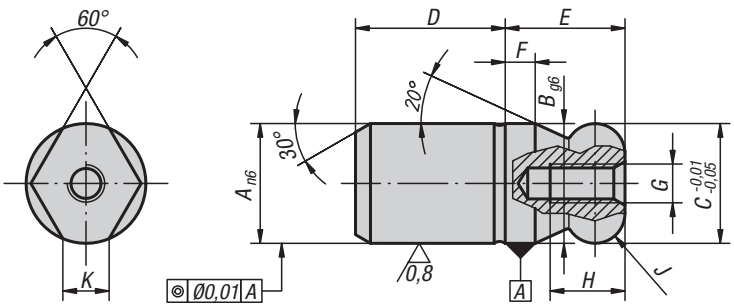

**Material:**
Tool steel or stainless steel 1.4305.

**Version:**
Steel hardened and ground.
Stainless steel ground and kolsterised.

**Sample order:**
K0350.162

**Note:**
Ball end locating pins are specially designed to ease the locating process. The tendency to jam, caused by the locating hole not being at right angles to the pin or by the pushing force not being parallel to the pin axis, is minimized by the ball-end form (see illustration for K0351 Form B)

### KIPP Locating pins with flattened ball-end Form C

| Order No. steel | Order No. stainless steel | A | B | C | D | E | F | G | H | J | K |
|---|---|---|---|---|---|---|---|---|---|---|---|
| K0350.082 | K0350.5082 | 8 | 8 | 8 | 10 | 8 | 2 | M3 | 6 | R 2 | 1,9 |
| K0350.102 | K0350.5102 | 10 | 10 | 10 | 13 | 10 | 2,5 | M3 | 6 | R 2,5 | 2,5 |
| K0350.122 | K0350.5122 | 12 | 12 | 12 | 15 | 12 | 3 | M4 | 8 | R 3 | 2,5 |
| K0350.162 | K0350.5162 | 16 | 16 | 16 | 20 | 16 | 4 | M5 | 10 | R 4 | 4,3 |
| K0350.202 | K0350.5202 | 20 | 20 | 20 | 25 | 20 | 5 | M5 | 10 | R 5 | 5 |
| K0350.252 | - | 25 | 25 | 25 | 25 | 25 | 6 | M5 | 10 | R 6 | 5,6 |
| K0350.302 | - | 30 | 30 | 30 | 30 | 30 | 8 | M6 | 12 | R 8 | 8,8 |
| K0350.402 | - | 40 | 40 | 40 | 40 | 40 | 10 | M6 | 12 | R 10 | 12,8 |
| K0350.502 | - | 50 | 50 | 50 | 50 | 50 | 12 | M6 | 12 | R 12 | 16,7 |

# K0351

## Locating pins

with flattened ball-end Form D

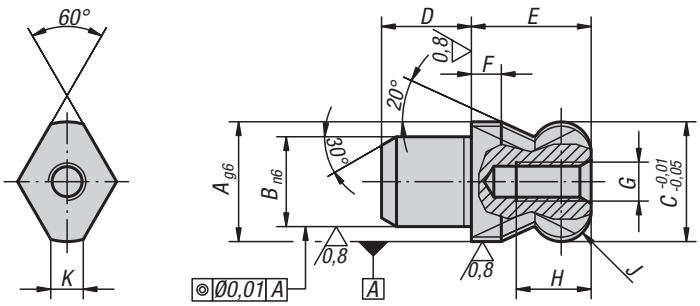

**Material:**
Tool steel or stainless steel 1.4305.

**Version:**
Steel hardened and ground.
Stainless steel ground and kolsterised.

**Sample order:**
K0351.162

**Note:**
Ball end locating pins are specially designed to ease the locating process. The tendency to jam, caused by the locating hole not being at right angles to the pin or by the pushing force not being parallel to the pin axis, is minimized by the ball-end form (see illustration for K0351 Form B)

### KIPP Locating pins with flattened ball-end Form D

| Order No. steel | Order No. stainless steel | A | B | C | D | E | F | G | H | J | K |
|---|---|---|---|---|---|---|---|---|---|---|---|
| K0351.102 | K0351.5102 | 10 | 7 | 10 | 7 | 10 | 2,5 | M3 | 6 | R 2,5 | 2,5 |
| K0351.122 | K0351.5122 | 12 | 8 | 12 | 8 | 12 | 3 | M4 | 8 | R 3 | 2,5 |
| K0351.162 | K0351.5162 | 16 | 12 | 16 | 12 | 16 | 4 | M5 | 10 | R 4 | 4,3 |
| K0351.202 | K0351.5202 | 20 | 14 | 20 | 14 | 20 | 5 | M5 | 10 | R 5 | 5 |
| K0351.222 | - | 22 | 16 | 22 | 16 | 22 | 5,5 | M5 | 10 | R 5,5 | 5 |
| K0351.252 | - | 25 | 18 | 25 | 18 | 25 | 6 | M5 | 10 | R 6 | 5,6 |

# K0819

## V-blocks, vertical

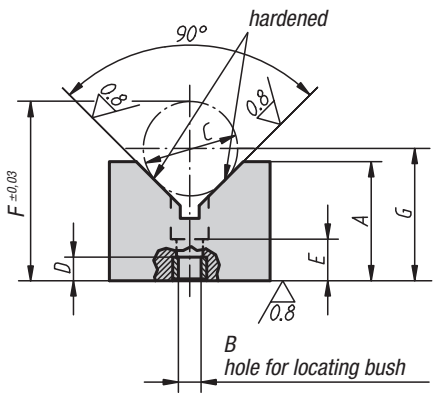

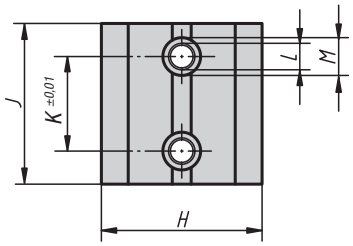


**Material:**
Carbon steel.

**Version:**
Black oxidised.
Prism and contact faces ground.

**Sample order:**
K0819.60008032

### KIPP V-blocks vertical

| Order No. | A | B Ø for locating bush | C min. | C max. | C Test-Ø | D | E | F | G | H | J | K | L | M | Approx. weight kg |
|---|---|---|---|---|---|---|---|---|---|---|---|---|---|---|---|
| **K0819.60008032** | 32 | 12 H6 | 10 | 25 | 15±0,003 | 8,5 | 13 | 40,1 | C/2 x√ 2+22 | 25 | 45 | 25 | 9 | 14 | 0,21 |

# K0819

## V-blocks, vertical

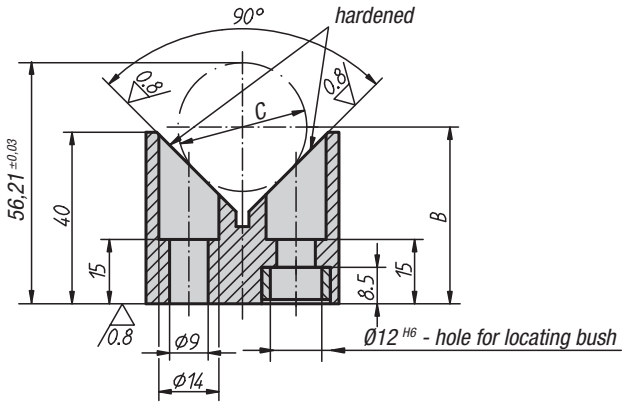

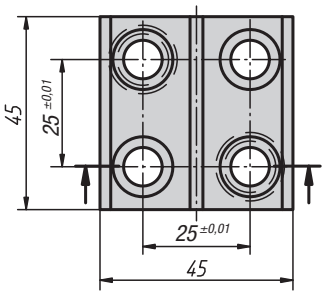


**Material:**
Carbon steel.

**Version:**
Black oxidised.
Prism and contact faces ground.

**Sample order:**
K0819.60008040

### KIPP V-blocks vertical

| Order No. | C min. | C max. | C Test-Ø | B | Approx. weight kg |
|---|---|---|---|---|---|
| **K0819.60008040** | 15 | 50 | 30±0,003 | A/2 x √2+20 | 0,39 |

# K0819

## V-blocks, vertical

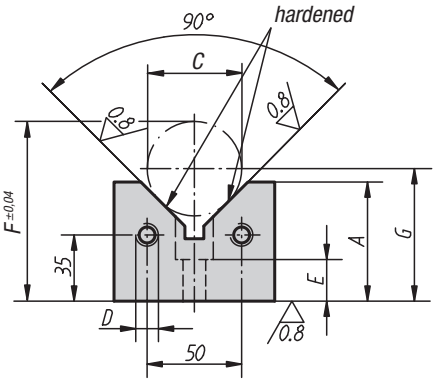

**Material:**
Carbon steel.

**Version:**
Black oxidised.
Prism and contact faces ground.

**Sample order:**
K0819.60012063

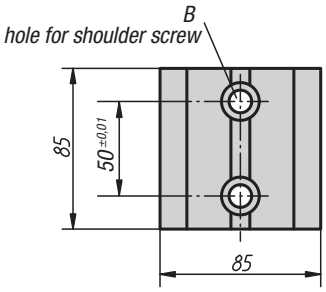


### KIPP V-blocks vertical

| Order No. | A | B Ø for shoulder screw | C min. | C max. | C Test-Ø | D | E | F | G | Suitable shoulder screw | Approx. weight kg |
|---|---|---|---|---|---|---|---|---|---|---|---|
| **K0819.60012063** | 63 | 12 F7 | 15 | 80 | 50±0,003 | M12 | 22 | 95,071 | C/2 x √2+34,716 | K0815.112055 | 2,825 |
| **K0819.60012075** | 75 | 12 F7 | 15 | 100 | 70±0,003 | M12 | 22 | 124,142 | C/2 x √2+39,645 | K0815.112055 | 3,17 |
| **K0819.60016063** | 63 | 16 F7 | 15 | 80 | 50±0,003 | M16 | 25 | 95,071 | C/2 x√ 2+34,716 | K0815.116065 | 2,69 |
| **K0819.60016075** | 75 | 16 F7 | 15 | 100 | 70±0,003 | M16 | 25 | 124,142 | C/2 x√2+39,645 | K0815.116065 | 2,995 |

# K0819

## V-blocks, vertical

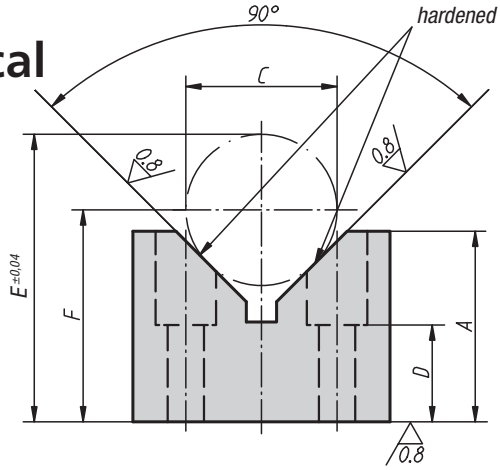

**Material:**
Carbon steel.

**Version:**
Black oxidised.
Prism and contact faces ground.

**Sample order:**
K0819.60512063

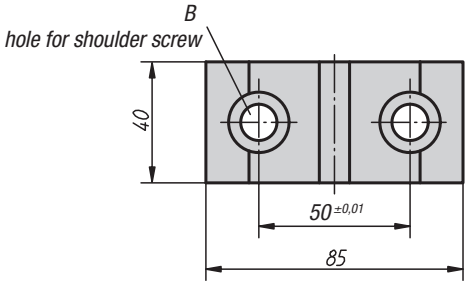


### KIPP V-blocks, vertical

| Order No. | A | B Ø for shoulder screw | C min. | C max. | C Test-Ø | D | E | F | Suitable shoulder screw | Approx. weight kg |
|---|---|---|---|---|---|---|---|---|---|---|
| **K0819.60512063** | 63 | 12 F7 | 15 | 80 | 50±0,003 | 32 | 95,071 | C/2 x √2+34,716 | K0815.112065 | 1,211 |
| **K0819.60512075** | 75 | 12 F7 | 15 | 100 | 70±0,003 | 32 | 124,142 | C/2 x √2+39,645 | K0815.112065 | 1,363 |
| **K0819.60516063** | 63 | 16 F7 | 15 | 80 | 50±0,003 | 25 | 95,071 | C/2 x √2+34,716 | K0815.116065 | 1,04 |
| **K0819.60516075** | 75 | 16 F7 | 15 | 100 | 70±0,003 | 25 | 124,142 | C/2 x √2+39,645 | K0815.116065 | 1,162 |

# K0819

# V-blocks split

left hand

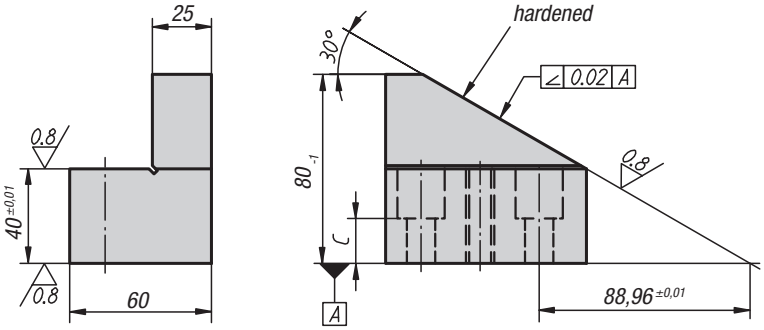


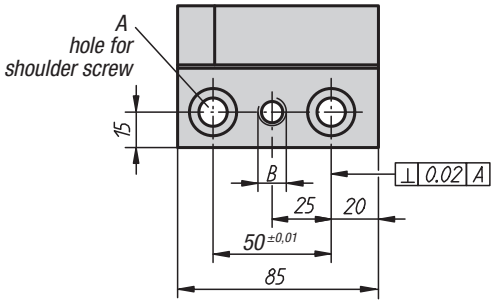


**Material:**
Carbon steel.

**Version:**
Black oxidised.
Half prism (30°) and contact faces ground.

**Sample order:**
K0819.6301230

**Note:**
Right-hand and left-hand split V-blocks are used for positioning round parts. Split V-blocks permit adjustment to the respective workpiece diameter.

right hand

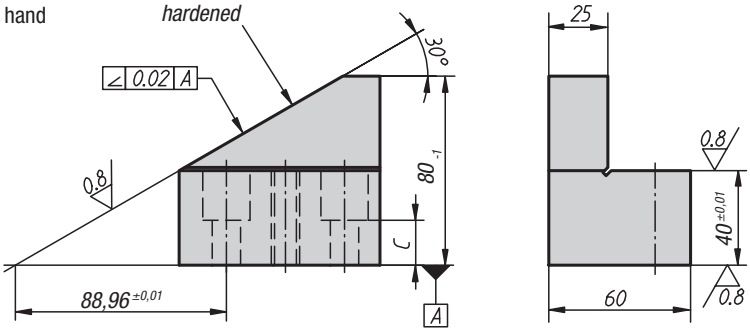


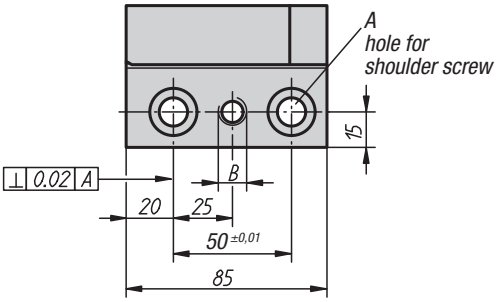


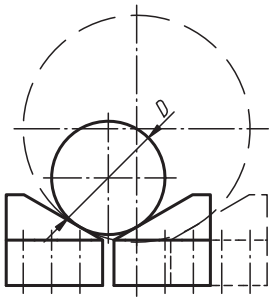


## KIPP V-blocks split

| Order No. Right-hand | Order No. Left-hand | A | B | C | D min. | D max. | Suitable shoulder screw | Approx. weight kg |
|---|---|---|---|---|---|---|---|---|
| **K0819.6301230** | **K0819.6311230** | 12 F7 | M12 | 23 | 50 | 600 | K0815.112055 | 1,82 |
| **K0819.6301630** | **K0819.6311630** | 16 F7 | M16 | 20 | 50 | 600 | K0815.116055 | 1,69 |

KIRÁLY TRADING KFT H-1151 Budapest Mogyoród útja 12 - 14 tel: 061307-3801 Email:pzoli@kiralytrading.hu

# Screw stop

adjustable

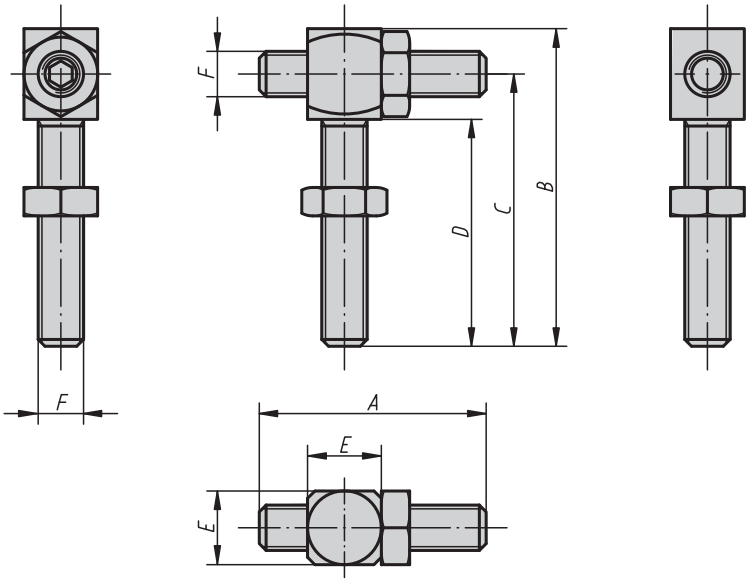


**Material:**
Carbon steel, tempered.

**Version:**
Black oxidised.

**Sample order:**
K0820.10

## KIPP Screw stop adjustable

| Order No. | A | B | C | D | E | F |
|---|---|---|---|---|---|---|
| **K0820.08** | 40 | 56 | 48 | 40 | 13 | M8 |
| **K0820.10** | 50 | 70 | 60 | 50 | 17 | M10 |
| **K0820.12** | 60 | 84 | 72 | 60 | 19 | M12 |
| **K0820.16** | 80 | 112 | 96 | 80 | 24 | M16 |

# Flexible clamps for vertical machining

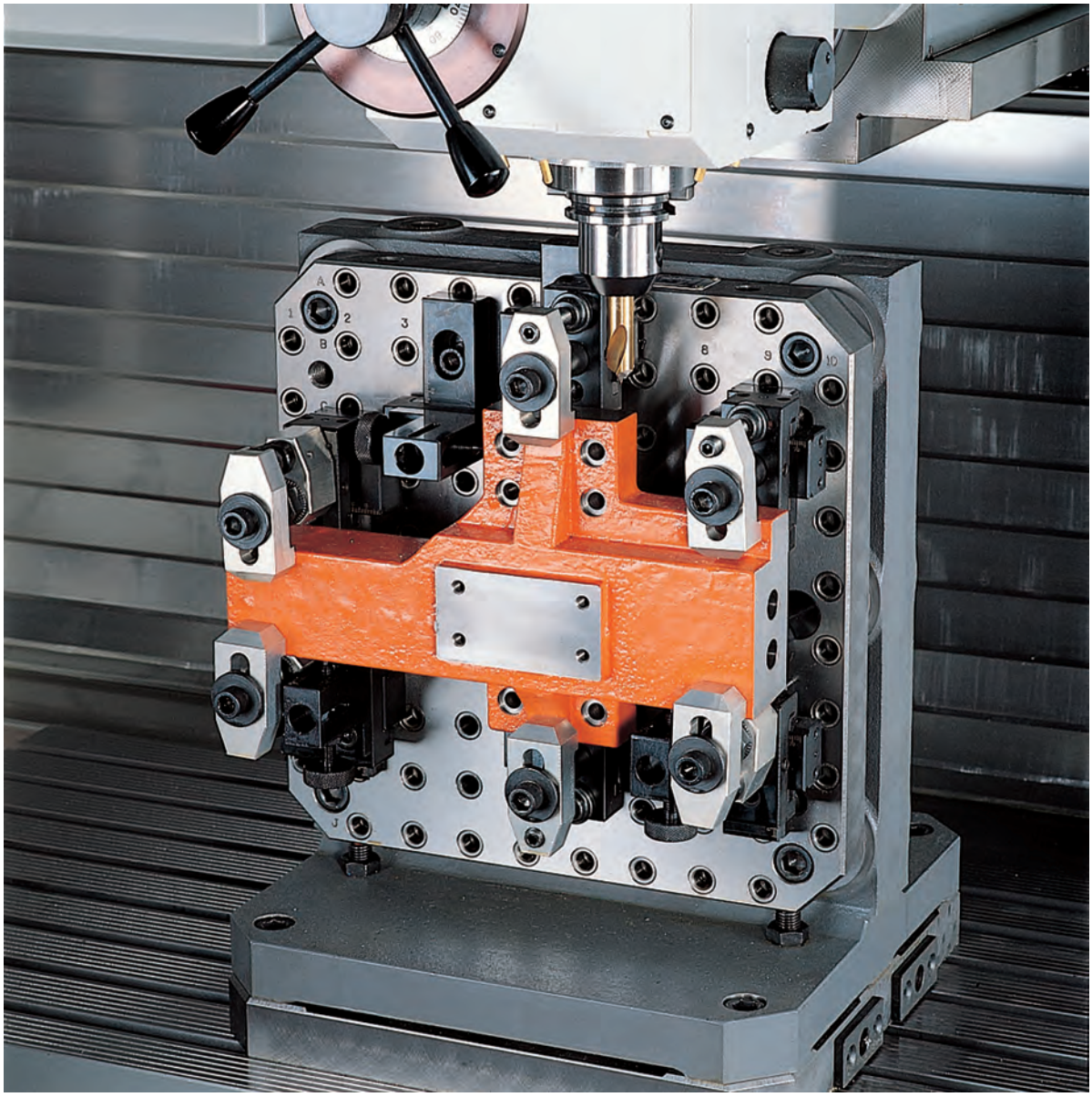

KIRÁLY TRADING KFT H-1151 Budapest Mogyoród útja 12 - 14 tel: 061307-3801 Email:pzoli@kiralytrading.hu

# Rest pads

Form A
smooth

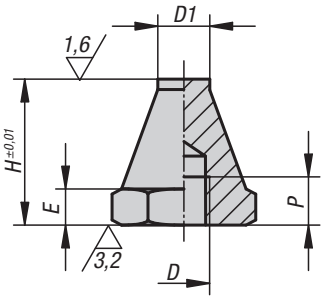


Form B
spherical

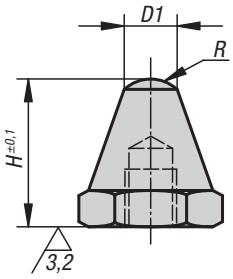


Form C
serrated

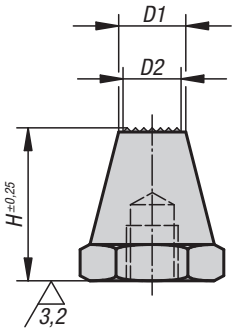


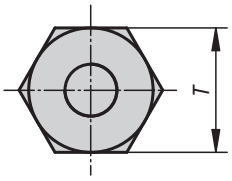


**Material:**
Body carbon steel.

**Version:**
Body tempered and black oxidised.

**Sample order:**
K0294.106012

**Note:**
Rest pads are for supporting machined and non-machined parts. They can also be used as stops and thrust pads in fixtures and toolmaking.
Studs or grub screws can be screwed and glued into the tapped hole D to make a rest pad with external thread.

## KIPP Rest pads

| Order No. Form A | Order No. Form B | Order No. Form C | D | D1 | D2 | E | H | P | R | T |
|---|---|---|---|---|---|---|---|---|---|---|
| K0294.106012 | K0294.206012 | K0294.306012 | M6 | 6 | -/-/5 | 3 | 12,5 | 4 | -/5/- | 11 |
| K0294.106025 | K0294.206025 | K0294.306025 | M6 | 6 | -/-/5 | 3 | 25 | 7 | -/5/- | 11 |
| K0294.108015 | K0294.208015 | K0294.308015 | M8 | 8 | -/-/6 | 4 | 15 | 6 | -/8,5/- | 13 |
| K0294.108030 | K0294.208030 | K0294.308030 | M8 | 8 | -/-/6 | 4 | 30 | 9 | -/8,5/- | 13 |
| K0294.110020 | K0294.210020 | K0294.310020 | M10 | 10 | -/-/8 | 5 | 20 | 9 | -/9/- | 17 |
| K0294.110040 | K0294.210040 | K0294.310040 | M10 | 10 | -/-/8 | 5 | 40 | 13 | -/9/- | 17 |
| K0294.112025 | K0294.212025 | K0294.312025 | M12 | 12 | -/-/9,5 | 6 | 25 | 11 | -/12,75/- | 19 |
| K0294.112050 | K0294.212050 | K0294.312050 | M12 | 12 | -/-/9,5 | 6 | 50 | 16 | -/12,75/- | 19 |
| K0294.116030 | K0294.216030 | K0294.316030 | M16 | 16 | -/-/13 | 8 | 30 | 12 | -/17/- | 24 |
| K0294.116060 | K0294.216060 | K0294.316060 | M16 | 16 | -/-/13 | 8 | 60 | 20 | -/17/- | 24 |

KIRÁLY TRADING KFT H-1151 Budapest Mogyoród útja 12 - 14 tel: 061307-3801 Email:pzoli@kiralytrading.hu

# Ball-end thrust screws with head

Form A
full ball

Form B
flattened ball

Form BV
flattened ball
non-rotating

Form F
flattened ball
diamond grip

Form FV
flattened ball
diamond grip
non-rotating

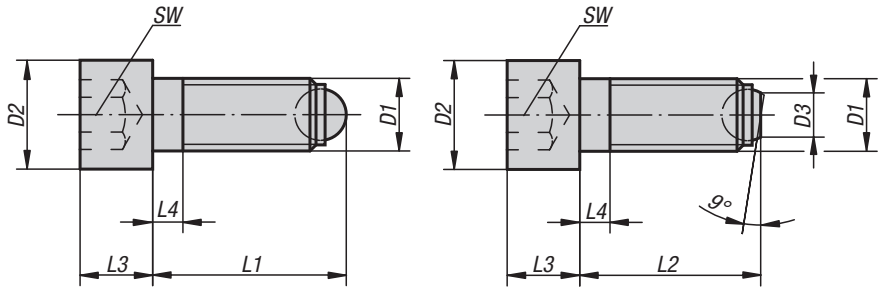


**Material:**
Screw carbon steel.
Ball ball-bearing steel.

**Version:**
Screw, grade 10.9, black.
Ball hardened, bright.

**Sample order:**
K0380.10820

**Note:**
Form A with full ball is used when a clean, polished contact surface is required. Surfaces which are not flat and parallel can be firmly clamped or supported with Form B with flattened ball, the movable ball can adapt itself up to 9°.

## KIPP Ball-end thrust screws with head

| Order No. Form A | D1 | D2 | L1 | L3 | L4 | Ball-Ø | SW |
|---|---|---|---|---|---|---|---|
| **K0380.10620** | M6 | 10 | 20,8 | 6 | 3 | 4 | 5 |
| **K0380.10630** | M6 | 10 | 30,8 | 6 | 3 | 4 | 5 |
| **K0380.10640** | M6 | 10 | 40,8 | 6 | 16 | 4 | 5 |
| **K0380.10820** | M8 | 13 | 21,2 | 8 | 3,5 | 5,5 | 6 |
| **K0380.10835** | M8 | 13 | 36,2 | 8 | 3,5 | 5,5 | 6 |
| **K0380.10850** | M8 | 13 | 51,2 | 8 | 22 | 5,5 | 6 |
| **K0380.11025** | M10 | 16 | 26,7 | 10 | 4,5 | 7 | 8 |
| **K0380.11040** | M10 | 16 | 41,7 | 10 | 4,5 | 7 | 8 |
| **K0380.11060** | M10 | 16 | 61,7 | 10 | 28 | 7 | 8 |
| **K0380.11230** | M12 | 18 | 32 | 12 | 5 | 8,5 | 10 |
| **K0380.11250** | M12 | 18 | 52 | 12 | 5 | 8,5 | 10 |
| **K0380.11280** | M12 | 18 | 82 | 12 | 44 | 8,5 | 10 |
| **K0380.11640** | M16 | 24 | 43,3 | 16 | 6 | 12 | 14 |
| **K0380.11660** | M16 | 24 | 63,3 | 16 | 6 | 12 | 14 |
| **K0380.11680** | M16 | 24 | 83,3 | 16 | 36 | 12 | 14 |
| **K0380.12050** | M20 | 30 | 54,2 | 20 | 7,5 | 15 | 17 |
| **K0380.12080** | M20 | 30 | 84,2 | 20 | 28 | 15 | 17 |
| **K0380.120100** | M20 | 30 | 104,2 | 20 | 48 | 15 | 17 |
| **K0380.12460** | M24 | 36 | 64,7 | 24 | 9 | 18 | 19 |
| **K0380.12490** | M24 | 36 | 94,7 | 24 | 30 | 18 | 19 |
| **K0380.124120** | M24 | 36 | 124,7 | 24 | 60 | 18 | 19 |

KIRÁLY TRADING KFT H-1151 Budapest Mogyoród útja 12 - 14 tel: 061307-3801 Email:pzoli@kiralytrading.hu

# Ball-end thrust screws with head

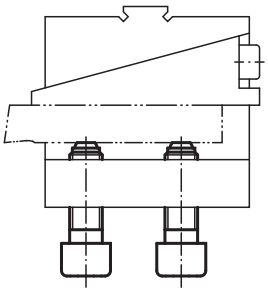

| Order No. Form B | Order No. Form F | D1 | D2 | L2 | L3 | L4 | Ball-Ø | SW |
|---|---|---|---|---|---|---|---|---|
| K0380.20620 | - | M6 | 10 | 20 | 6 | 3 | 4 | 5 |
| K0380.20630 | - | M6 | 10 | 30 | 6 | 3 | 4 | 5 |
| K0380.20640 | - | M6 | 10 | 40 | 6 | 16 | 4 | 5 |
| K0380.20820 | - | M8 | 13 | 20 | 8 | 3,5 | 5,5 | 6 |
| K0380.20835 | - | M8 | 13 | 35 | 8 | 3,5 | 5,5 | 6 |
| K0380.20850 | - | M8 | 13 | 50 | 8 | 22 | 5,5 | 6 |
| K0380.21025 | K0380.31025 | M10 | 16 | 25 | 10 | 4,5 | 7 | 8 |
| K0380.21040 | K0380.31040 | M10 | 16 | 40 | 10 | 4,5 | 7 | 8 |
| K0380.21060 | K0380.31060 | M10 | 16 | 60 | 10 | 28 | 7 | 8 |
| K0380.21230 | K0380.31230 | M12 | 18 | 30 | 12 | 5 | 8,5 | 10 |
| K0380.21250 | K0380.31250 | M12 | 18 | 50 | 12 | 5 | 8,5 | 10 |
| K0380.21280 | K0380.31280 | M12 | 18 | 80 | 12 | 44 | 8,5 | 10 |
| K0380.21640 | K0380.31640 | M16 | 24 | 40 | 16 | 6 | 12 | 14 |
| K0380.21660 | K0380.31660 | M16 | 24 | 60 | 16 | 6 | 12 | 14 |
| K0380.21680 | K0380.31680 | M16 | 24 | 80 | 16 | 36 | 12 | 14 |
| K0380.22050 | - | M20 | 30 | 50 | 20 | 7,5 | 15 | 17 |
| K0380.22080 | - | M20 | 30 | 80 | 20 | 28 | 15 | 17 |
| K0380.220100 | - | M20 | 30 | 100 | 20 | 48 | 15 | 17 |
| K0380.22460 | - | M24 | 36 | 60 | 24 | 9 | 18 | 19 |
| K0380.22490 | - | M24 | 36 | 90 | 24 | 30 | 18 | 19 |
| K0380.224120 | - | M24 | 36 | 120 | 24 | 60 | 18 | 19 |

| Order No. Form BV | Order No. Form FV | D1 | D2 | D3 | L2 | L3 | L4 | Ball-Ø | SW | Load rating max. kN (static load only) |
|---|---|---|---|---|---|---|---|---|---|---|
| K0380.40820 | - | M8 | 13 | 4,5 | 20 | 8 | 3,5 | 5,5 | 6 | 9 |
| K0380.40835 | - | M8 | 13 | 4,5 | 35 | 8 | 3,5 | 5,5 | 6 | 9 |
| K0380.40850 | - | M8 | 13 | 4,5 | 50 | 8 | 22 | 5,5 | 6 | 9 |
| K0380.41025 | K0380.51025 | M10 | 16 | 6 | 25 | 10 | 4,5 | 7 | 8 | 12 |
| K0380.41040 | K0380.51040 | M10 | 16 | 6 | 40 | 10 | 4,5 | 7 | 8 | 12 |
| K0380.41060 | K0380.51060 | M10 | 16 | 6 | 60 | 10 | 28 | 7 | 8 | 12 |
| K0380.41230 | K0380.51230 | M12 | 18 | 7,2 | 30 | 12 | 5 | 8,5 | 10 | 18 |
| K0380.41250 | K0380.51250 | M12 | 18 | 7,2 | 50 | 12 | 5 | 8,5 | 10 | 18 |
| K0380.41280 | K0380.51280 | M12 | 18 | 7,2 | 80 | 12 | 44 | 8,5 | 10 | 18 |
| K0380.41640 | K0380.51640 | M16 | 24 | 10,7 | 40 | 16 | 6 | 12 | 14 | 36 |
| K0380.41660 | K0380.51660 | M16 | 24 | 10,7 | 60 | 16 | 6 | 12 | 14 | 36 |
| K0380.41680 | K0380.51680 | M16 | 24 | 10,7 | 80 | 16 | 36 | 12 | 14 | 36 |

KIRÁLY TRADING KFT H-1151 Budapest Mogyoród útja 12 - 14 tel: 061307-3801 Email:pzoli@kiralytrading.hu

# Ball-end thrust screws without head

with flattened ball

Form B
steel ball

Form C
POM ball

Form F
serrated steel ball

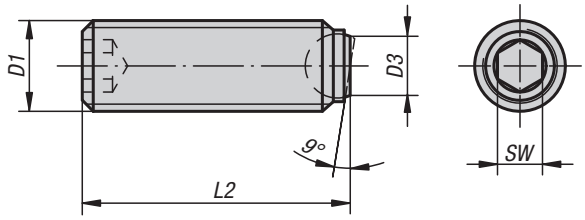

## KIPP Ball-end thrust screws without head with flattened ball, ball POM

| Order No. | Form | D1 | D3 | L2 | Ball-Ø | SW | Load rating max. kN (static load only) |
|---|---|---|---|---|---|---|---|
| K0383.7046 | C | M4 | 1,8 | 5,9 | 2,5 | 2 | 0,3 |
| K0383.7048 | C | M4 | 1,8 | 7,9 | 2,5 | 2 | 0,3 |
| K0383.70410 | C | M4 | 1,8 | 9,9 | 2,5 | 2 | 0,3 |
| K0383.70412 | C | M4 | 1,8 | 11,9 | 2,5 | 2 | 0,3 |
| K0383.70416 | C | M4 | 1,8 | 15,9 | 2,5 | 2 | 0,3 |
| K0383.7058 | C | M5 | 2,1 | 7,8 | 3 | 2,5 | 0,5 |
| K0383.70510 | C | M5 | 2,1 | 9,8 | 3 | 2,5 | 0,5 |
| K0383.70512 | C | M5 | 2,1 | 11,8 | 3 | 2,5 | 0,5 |
| K0383.70516 | C | M5 | 2,1 | 15,8 | 3 | 2,5 | 0,5 |
| K0383.70520 | C | M5 | 2,1 | 19,8 | 3 | 2,5 | 0,5 |
| K0383.70525 | C | M5 | 2,1 | 24,8 | 3 | 2,5 | 0,5 |
| K0383.70610 | C | M6 | 3 | 10,3 | 4 | 3 | 0,9 |
| K0383.70612 | C | M6 | 3 | 12,3 | 4 | 3 | 0,9 |
| K0383.70616 | C | M6 | 3 | 16,3 | 4 | 3 | 0,9 |
| K0383.70620 | C | M6 | 3 | 20,3 | 4 | 3 | 0,9 |
| K0383.70625 | C | M6 | 3 | 25,3 | 4 | 3 | 0,9 |
| K0383.70810 | C | M8 | 4,2 | 10,4 | 5,5 | 4 | 1,5 |
| K0383.70812 | C | M8 | 4,2 | 12,4 | 5,5 | 4 | 1,5 |
| K0383.70816 | C | M8 | 4,2 | 16,4 | 5,5 | 4 | 1,5 |
| K0383.70820 | C | M8 | 4,2 | 20,4 | 5,5 | 4 | 1,5 |
| K0383.70825 | C | M8 | 4,2 | 25,4 | 5,5 | 4 | 1,5 |
| K0383.70830 | C | M8 | 4,2 | 30,4 | 5,5 | 4 | 1,5 |

## KIPP Ball-end thrust screws without head with flattened ball, ball serrated steel

| Order No. | Form | D1 | D3 | L2 | Ball-Ø | SW | Load rating max. kN (static load only) |
|---|---|---|---|---|---|---|---|
| K0383.41012 | F | M10 | 6 | 12 | 7 | 5 | 20 |
| K0383.41016 | F | M10 | 6 | 16 | 7 | 5 | 20 |
| K0383.41025 | F | M10 | 6 | 25 | 7 | 5 | 20 |
| K0383.41035 | F | M10 | 6 | 35 | 7 | 5 | 20 |
| K0383.41216 | F | M12 | 7,2 | 16 | 8,5 | 6 | 30 |
| K0383.41220 | F | M12 | 7,2 | 20 | 8,5 | 6 | 30 |
| K0383.41230 | F | M12 | 7,2 | 30 | 8,5 | 6 | 30 |
| K0383.41240 | F | M12 | 7,2 | 40 | 8,5 | 6 | 30 |
| K0383.41620 | F | M16 | 10,7 | 20 | 12 | 8 | 60 |
| K0383.41625 | F | M16 | 10,7 | 25 | 12 | 8 | 60 |
| K0383.41635 | F | M16 | 10,7 | 35 | 12 | 8 | 60 |
| K0383.41650 | F | M16 | 10,7 | 50 | 12 | 8 | 60 |

**Material:**
Screw carbon steel, grade 10.9.
Ball, ball-bearing steel or POM.

**Version:**
Screw black.
Ball hardened bright or POM.

**Sample order:**
K0383.41012

**Note:**
Surfaces which are not flat and parallel can be firmly clamped or supported with Form B, C or F with flattened ball, the movable ball can adapt itself up to 9°.
Longer versions have been specially designed to glue in, allowing mechanical connecting elements with external thread to be made cost-effectively for small and medium-sized series.

KIRÁLY TRADING KFT H-1151 Budapest Mogyoród útja 12 - 14 tel: 061307-3801 Email:pzoli@kiralytrading.hu

# Ball-end thrust screws without head

with flattened ball

## KIPP Ball-end thrust screws without head with flattened ball, ball steel

| Order No. | Form | D1 | D3 | L2 | Ball-Ø | SW | Load rating max. kN (static load only) |
|---|---|---|---|---|---|---|---|
| K0383.2046 | B | M4 | 1,4 | 5,8 | 2,5 | 2 | 3,5 |
| K0383.2048 | B | M4 | 1,4 | 7,8 | 2,5 | 2 | 3,5 |
| K0383.20410 | B | M4 | 1,4 | 9,8 | 2,5 | 2 | 3,5 |
| K0383.20412 | B | M4 | 1,4 | 11,8 | 2,5 | 2 | 3,5 |
| K0383.20416 | B | M4 | 1,4 | 15,8 | 2,5 | 2 | 3,5 |
| K0383.2058 | B | M5 | 2 | 7,6 | 3 | 2,5 | 4,5 |
| K0383.20510 | B | M5 | 2 | 9,6 | 3 | 2,5 | 4,5 |
| K0383.20512 | B | M5 | 2 | 11,6 | 3 | 2,5 | 4,5 |
| K0383.20516 | B | M5 | 2 | 15,6 | 3 | 2,5 | 4,5 |
| K0383.20520 | B | M5 | 2 | 19,6 | 3 | 2,5 | 4,5 |
| K0383.20525 | B | M5 | 2 | 24,6 | 3 | 2,5 | 4,5 |
| K0383.20610 | B | M6 | 3 | 10,1 | 4 | 3 | 9 |
| K0383.20612 | B | M6 | 3 | 12,1 | 4 | 3 | 9 |
| K0383.20616 | B | M6 | 3 | 16,1 | 4 | 3 | 9 |
| K0383.20620 | B | M6 | 3 | 20,1 | 4 | 3 | 9 |
| K0383.20625 | B | M6 | 3 | 25,1 | 4 | 3 | 9 |
| K0383.20650 | B | M6 | 3 | 50,1 | 4 | 3 | 9 |
| K0383.20660 | B | M6 | 3 | 60,1 | 4 | 3 | 9 |
| K0383.20680 | B | M6 | 3 | 80,1 | 4 | 3 | 9 |
| K0383.20810 | B | M8 | 4,1 | 10,3 | 5,5 | 4 | 10 |
| K0383.20812 | B | M8 | 4,1 | 12,3 | 5,5 | 4 | 10 |
| K0383.20816 | B | M8 | 4,1 | 16,3 | 5,5 | 4 | 15 |
| K0383.20820 | B | M8 | 4,1 | 20,3 | 5,5 | 4 | 15 |
| K0383.20825 | B | M8 | 4,1 | 25,3 | 5,5 | 4 | 15 |
| K0383.20830 | B | M8 | 4,1 | 30,3 | 5,5 | 4 | 15 |
| K0383.20850 | B | M8 | 4,1 | 50,3 | 5,5 | 4 | 15 |
| K0383.20860 | B | M8 | 4,1 | 60,3 | 5,5 | 4 | 15 |
| K0383.20880 | B | M8 | 4,1 | 80,3 | 5,5 | 4 | 15 |
| K0383.21012 | B | M10 | 5,6 | 12,3 | 7 | 5 | 20 |
| K0383.21016 | B | M10 | 5,6 | 16,3 | 7 | 5 | 20 |
| K0383.21020 | B | M10 | 5,6 | 20,3 | 7 | 5 | 20 |
| K0383.21025 | B | M10 | 5,6 | 25,3 | 7 | 5 | 20 |
| K0383.21035 | B | M10 | 5,6 | 35,3 | 7 | 5 | 20 |
| K0383.21216 | B | M12 | 7 | 16,2 | 8,5 | 6 | 30 |
| K0383.21220 | B | M12 | 7 | 20,2 | 8,5 | 6 | 30 |
| K0383.21230 | B | M12 | 7 | 30,2 | 8,5 | 6 | 30 |
| K0383.21240 | B | M12 | 7 | 40,2 | 8,5 | 6 | 30 |
| K0383.21620 | B | M16 | 10,7 | 20 | 12 | 8 | 60 |
| K0383.21625 | B | M16 | 10,7 | 25 | 12 | 8 | 60 |
| K0383.21635 | B | M16 | 10,7 | 35 | 12 | 8 | 60 |
| K0383.21650 | B | M16 | 10,7 | 50 | 12 | 8 | 60 |
| K0383.22030 | B | M20 | 13,5 | 30 | 15 | 10 | 90 |
| K0383.22040 | B | M20 | 13,5 | 40 | 15 | 10 | 90 |
| K0383.22060 | B | M20 | 13,5 | 60 | 15 | 10 | 90 |
| K0383.22435 | B | M24 | 15,8 | 35 | 18 | 12 | 120 |
| K0383.22450 | B | M24 | 15,8 | 50 | 18 | 12 | 120 |
| K0383.22480 | B | M24 | 15,8 | 80 | 18 | 12 | 120 |

KIRÁLY TRADING KFT H-1151 Budapest Mogyoród útja 12 - 14 tel: 061307-3801 Email:pzoli@kiralytrading.hu

# Ball-end thrust screws without head

with flattened ball and rotation lock

Form BV
flattened ball
non-rotating

Form FV
flattened ball
diamond grip, non-rotating

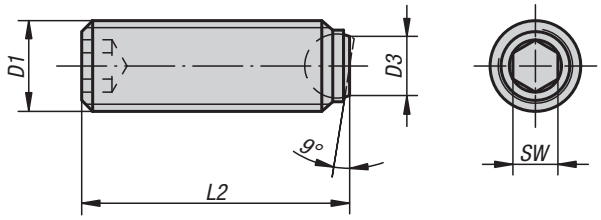


**Material:**
Screw carbon steel, grade 10.9.
Ball, ball-bearing steel.

**Version:**
Screw black.
Ball hardened, bright.

**Sample order:**
K0383.50820

**Note:**
Surfaces which are not flat and parallel can be firmly clamped or supported with with a flattened ball, the movable ball can adapt itself up to 9°.
Longer versions have been designed especially to be glued in. This allows mechanical connecting elements with external thread to be made cost-effectively for small and medium-sized series.

## KIPP Ball-end thrust screws without head, with flattened ball and rotation lock

| Order No. Form BV | Order No. Form FV | D1 | D3 | L2 | Ball-Ø | SW | Load rating max. kN (static load only) |
|---|---|---|---|---|---|---|---|
| **K0383.50820** | - | M8 | 4,1 | 20,3 | 5,5 | 4 | 9 |
| **K0383.50830** | - | M8 | 4,1 | 30,3 | 5,5 | 4 | 9 |
| **K0383.51035** | **K0383.61035** | M10 | 5,6 | 35,3 | 7 | 5 | 12 |
| **K0383.51025** | **K0383.61025** | M10 | 5,6 | 25,3 | 7 | 5 | 12 |
| **K0383.51230** | **K0383.61230** | M12 | 7 | 30,2 | 8,5 | 6 | 18 |
| **K0383.51240** | **K0383.61240** | M12 | 7 | 40,2 | 8,5 | 6 | 18 |
| **K0383.51635** | **K0383.61635** | M16 | 10,7 | 35 | 12 | 8 | 36 |
| **K0383.51650** | **K0383.61650** | M16 | 10,7 | 50 | 12 | 8 | 36 |

# Notes

KIRÁLY TRADING KFT H-1151 Budapest Mogyoród útja 12 - 14 tel: 061307-3801 Email:pzoli@kiralytrading.hu

# Ball-end thrust screws without head

with full ball

Form A
steel ball

Form D
POM ball

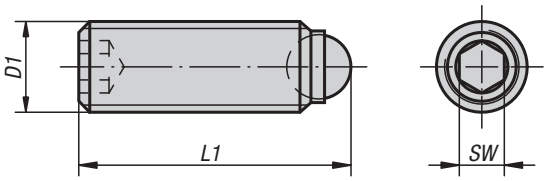


**Material:**
Screw carbon steel, grade 10.9.
Ball, ball-bearing steel or POM.

**Version:**
Screw black.
Ball hardened bright or POM.

**Sample order:**
K0383.10810

**Note:**
Ball-end thrust screws with full ball are used when a clean, polished contact surface is required.
Longer versions have been specially designed to be glued in, allowing mechanical connecting elements with external thread to be made cost-effectively for small and medium-sized series.

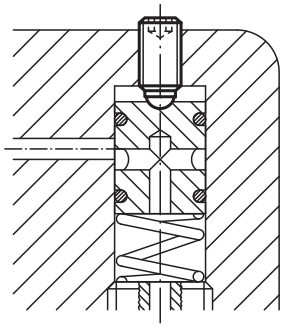

## KIPP Ball-end thrust screws without head with full ball

| Order No. Form A | Order No. Form D | D1 | L1 | Ball-Ø | SW | Load rating max. kN (static load only) |
|---|---|---|---|---|---|---|
| K0383.1046 | K0383.3046 | M4 | 6 | 2,5 | 2 | 3,5/0,3 |
| K0383.1048 | K0383.3048 | M4 | 8 | 2,5 | 2 | 3,5/0,3 |
| K0383.10410 | K0383.30410 | M4 | 10 | 2,5 | 2 | 3,5/0,3 |
| K0383.10412 | K0383.30412 | M4 | 12 | 2,5 | 2 | 3,5/0,3 |
| K0383.10416 | K0383.30416 | M4 | 16 | 2,5 | 2 | 3,5/0,3 |
| K0383.1058 | K0383.3058 | M5 | 8 | 3 | 2,5 | 4,5/0,5 |
| K0383.10510 | K0383.30510 | M5 | 10 | 3 | 2,5 | 4,5/0,5 |
| K0383.10512 | K0383.30512 | M5 | 12 | 3 | 2,5 | 4,5/0,5 |
| K0383.10516 | K0383.30516 | M5 | 16 | 3 | 2,5 | 4,5/0,5 |
| K0383.10520 | K0383.30520 | M5 | 20 | 3 | 2,5 | 4,5/0,5 |
| K0383.10525 | K0383.30525 | M5 | 25 | 3 | 2,5 | 4,5/0,5 |
| K0383.10610 | K0383.30610 | M6 | 10,8 | 4 | 3 | 9/0,9 |
| K0383.10612 | K0383.30612 | M6 | 12,8 | 4 | 3 | 9/0,9 |
| K0383.10616 | K0383.30616 | M6 | 16,8 | 4 | 3 | 9/0,9 |
| K0383.10620 | K0383.30620 | M6 | 20,8 | 4 | 3 | 9/0,9 |
| K0383.10625 | K0383.30625 | M6 | 25,8 | 4 | 3 | 9/0,9 |
| K0383.10650 | - | M6 | 50,8 | 4 | 3 | 9 |
| K0383.10660 | - | M6 | 60,8 | 4 | 3 | 9 |
| K0383.10680 | - | M6 | 80,8 | 4 | 3 | 9 |

KIRÁLY TRADING KFT H-1151 Budapest Mogyoród útja 12 - 14 tel: 061307-3801 Email:pzoli@kiralytrading.hu

# Ball-end thrust screws without head

with full ball

## KIPP Ball-end thrust screws without head with full ball

| Order No. Form A | Order No. Form D | D1 | L1 | Ball-Ø | SW | Load rating max. kN (static load only) |
|---|---|---|---|---|---|---|
| K0383.10810 | K0383.30810 | M8 | 11,2 | 5,5 | 4 | 10/1,5 |
| K0383.10812 | K0383.30812 | M8 | 13,2 | 5,5 | 4 | 10/1,5 |
| K0383.10816 | K0383.30816 | M8 | 17,2 | 5,5 | 4 | 15/1,5 |
| K0383.10820 | K0383.30820 | M8 | 21,2 | 5,5 | 4 | 15/1,5 |
| K0383.10825 | K0383.30825 | M8 | 26,2 | 5,5 | 4 | 15/1,5 |
| K0383.10830 | K0383.30830 | M8 | 31,2 | 5,5 | 4 | 15/1,5 |
| K0383.10850 | - | M8 | 51,2 | 5,5 | 4 | 15 |
| K0383.10860 | - | M8 | 61,2 | 5,5 | 4 | 15 |
| K0383.10880 | - | M8 | 81,2 | 5,5 | 4 | 15 |
| K0383.11012 | K0383.31012 | M10 | 13,7 | 7 | 5 | 20/2 |
| K0383.11016 | K0383.31016 | M10 | 17,7 | 7 | 5 | 20/2 |
| K0383.11020 | K0383.31020 | M10 | 21,7 | 7 | 5 | 20/2 |
| K0383.11025 | K0383.31025 | M10 | 26,7 | 7 | 5 | 20/2 |
| K0383.11035 | K0383.31035 | M10 | 36,7 | 7 | 5 | 20/2 |
| K0383.11216 | K0383.31216 | M12 | 18 | 8,5 | 6 | 30/3 |
| K0383.11220 | K0383.31220 | M12 | 22 | 8,5 | 6 | 30/3 |
| K0383.11225 | - | M12 | 27 | 8,5 | 6 | 30 |
| K0383.11230 | K0383.31230 | M12 | 32 | 8,5 | 6 | 30/3 |
| K0383.11232 | - | M12 | 34 | 8,5 | 6 | 30 |
| K0383.11240 | K0383.31240 | M12 | 42 | 8,5 | 6 | 30/3 |
| K0383.11620 | - | M16 | 23,3 | 12 | 8 | 60 |
| K0383.11625 | - | M16 | 28,3 | 12 | 8 | 60 |
| K0383.11635 | - | M16 | 38,3 | 12 | 8 | 60 |
| K0383.11650 | - | M16 | 53,3 | 12 | 8 | 60 |
| K0383.12030 | - | M20 | 34,2 | 15 | 10 | 90 |
| K0383.12040 | - | M20 | 44,2 | 15 | 10 | 90 |
| K0383.12060 | - | M20 | 64,2 | 15 | 10 | 90 |
| K0383.12435 | - | M24 | 39,7 | 18 | 12 | 120 |
| K0383.12450 | - | M24 | 54,7 | 18 | 12 | 120 |
| K0383.12480 | - | M24 | 84,7 | 18 | 12 | 120 |

KIRÁLY TRADING KFT H-1151 Budapest Mogyoród útja 12 - 14 tel: 061307-3801 Email:pzoli@kiralytrading.hu

# Self-aligning pads

Form C
external thread,
flattened ball,
flat face

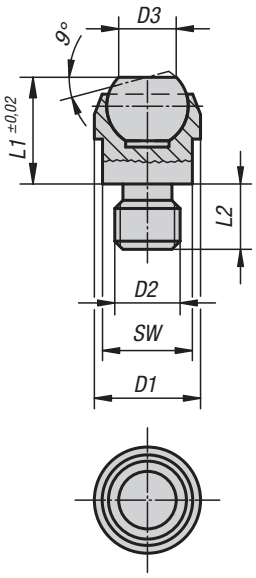


Form F
external thread,
flattened ball,
diamond grip

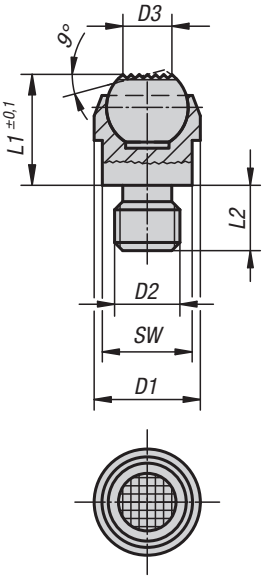


Form M
external thread,
flattened ball,
diamond grip

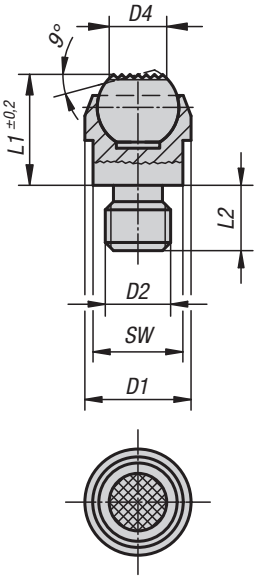


**Material:**
Body carbon steel.
Ball ball-bearing steel 1.2067.
Form M: ball carbon steel with carbide insert.

**Version:**
Body tempered and phosphated.
Ball hardened.
Form M ball tempered.

**Sample order:**
K0282.120

**Note:**
Self-aligning pads serve as stops, supports and thrust pads in fixture constructions.
The serrated carbide tips are soldered in.

Ball secured against rotation.

* Valid only if the minimum bore depth is observed.

Form G
press fit,
flattened ball, flat face

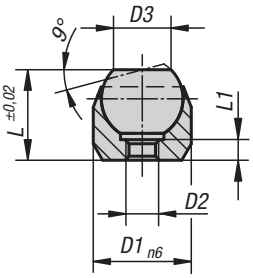


Form J
press fit,
flattened ball, diamond grip

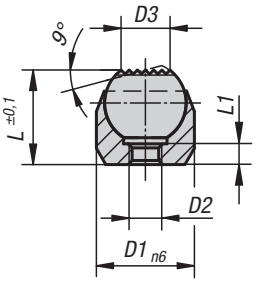


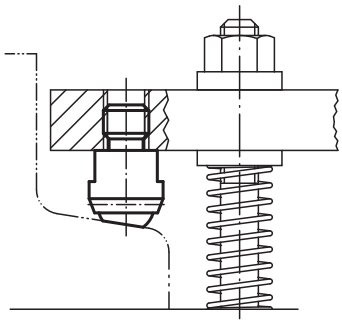

KIRÁLY TRADING KFT H-1151 Budapest Mogyoród útja 12 - 14 tel: 061307-3801 Email:pzoli@kiralytrading.hu

# Self-aligning pads

## KIPP Self-aligning pads

| Order No. | Form | D1 | D2 | D3 | L1 | L2 | Ball-Ø | SW | Load rating max. kN (static load only) |
|---|---|---|---|---|---|---|---|---|---|
| **K0282.108** | C | 13 | M8 | 7,2 | 13 | 8 | 10 | 11 | 10 |
| **K0282.110** | C | 20 | M10 | 10,5 | 18 | 10 | 16 | 17 | 25 |
| **K0282.112** | C | 20 | M12 | 10,5 | 18 | 12 | 16 | 17 | 25 |
| **K0282.116** | C | 30 | M16 | 20 | 27 | 16 | 25 | 27 | 90 |
| **K0282.120** | C | 50 | M20 | 34,5 | 35 | 20 | 40 | 41 | 165 |

| Order No. | Form | D1 | D2 | D3 | L1 | L2 | Ball-Ø | SW | Load rating max. kN (static load only) |
|---|---|---|---|---|---|---|---|---|---|
| **K0282.308** | F | 13 | M8 | 7,2 | 13 | 8 | 10 | 11 | 10 |
| **K0282.310** | F | 20 | M10 | 10,5 | 18 | 10 | 16 | 17 | 25 |
| **K0282.312** | F | 20 | M12 | 10,5 | 18 | 12 | 16 | 17 | 25 |
| **K0282.316** | F | 30 | M16 | 20 | 27 | 16 | 25 | 27 | 90 |
| **K0282.320** | F | 50 | M20 | 34,5 | 35 | 20 | 40 | 41 | 165 |

| Order No. | Form | D1 | D2 | D4 | L1 | L2 | SW | Ball-Ø | Load rating max. kN (static load only) |
|---|---|---|---|---|---|---|---|---|---|
| **K0282.908** | M | 13 | M8 | 7,7 | 13,3 | 8 | 11 | 10 | 10 |
| **K0282.910** | M | 20 | M10 | 12 | 18 | 10 | 17 | 16 | 25 |
| **K0282.912** | M | 20 | M12 | 12 | 18 | 12 | 17 | 16 | 25 |

| Order No. | Form | D1 | D2 | D3 | L | L1 | Ball-Ø | Receiving hole | Load rating max. kN (static load only) |
|---|---|---|---|---|---|---|---|---|---|
| **K0282.403** | G | 12 | M3 | 7,2 | 11 | 3,5 | 10 | ø 12 H7 x 6 min. | 10* |
| **K0282.404** | G | 18 | M4 | 10,5 | 17 | 4,4 | 16 | ø 18 H7 x 8 min. | 25* |
| **K0282.405** | G | 28 | M5 | 20 | 25 | 6,3 | 25 | ø 28 H7 x 13 min. | 90* |

| Order No. | Form | D1 | D2 | D3 | L | L1 | Ball-Ø | Receiving hole | Load rating max. kN (static load only) |
|---|---|---|---|---|---|---|---|---|---|
| **K0282.603** | J | 12 | M3 | 7,2 | 11 | 3,5 | 10 | ø 12 H7 x 6 min. | 10* |
| **K0282.604** | J | 18 | M4 | 10,5 | 17 | 4,4 | 16 | ø 18 H7 x 8 min. | 25* |
| **K0282.605** | J | 28 | M5 | 20 | 25 | 6,3 | 25 | ø 28 H7 x 13 min. | 90* |

KIRÁLY TRADING KFT H-1151 Budapest Mogyoród útja 12 - 14 tel: 061307-3801 Email:pzoli@kiralytrading.hu

# Self-aligning pads

swivel angle 12°

Form C
external thread,
flattened ball, flat face

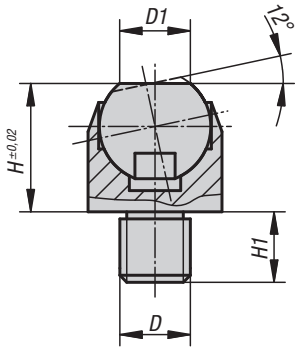


Form F
external thread
flattened ball, diamond grip

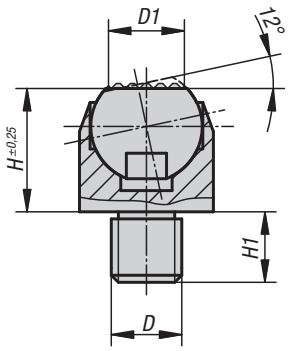


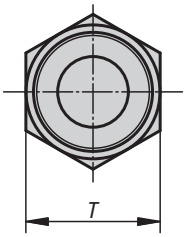


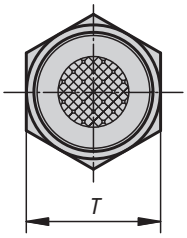


**Material:**
Body carbon steel.
Ball ball-bearing steel 1.3505.

**Version:**
Body tempered.
Ball hardened (50 - 55 HRC).

**Sample order:**
K0302.106

**Note:**
Self-aligning pads serve as stops, supports and thrust pads in fixture construction.

Ball secured against rotation.

## KIPP Self-aligning pads swivel angle 12°

| Order No. Form C | Order No. Form F | D | D1 | H | H1 | Ball-Ø | T | Load rating max. kN (static load only) |
|---|---|---|---|---|---|---|---|---|
| **K0302.106** | **K0302.306** | M6 | 6,7 | 13 | 7 | 10 | 13 | 10 |
| **K0302.108** | **K0302.308** | M8 | 6,7 | 13 | 8 | 10 | 13 | 10 |
| **K0302.110** | **K0302.310** | M10 | 10 | 18 | 10 | 16 | 19 | 25 |
| **K0302.112** | **K0302.312** | M12 | 10 | 18 | 12 | 16 | 19 | 25 |
| **K0302.116** | **K0302.316** | M16 | 20 | 27 | 16 | 24 | 30 | 90 |
| **K0302.120** | **K0302.320** | M20 | 20 | 27 | 20 | 24 | 30 | 90 |

KIRÁLY TRADING KFT H-1151 Budapest Mogyoród útja 12 - 14 tel: 061307-3801 Email:pzoli@kiralytrading.hu

# Self-aligning pads

swivel angle 14° and 20°

Form C
flattened ball,
flat face

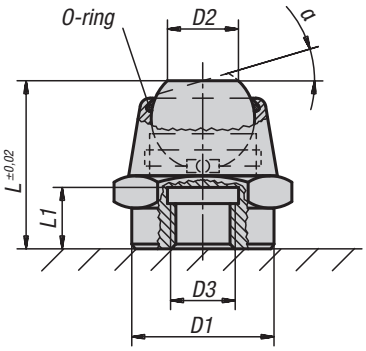


Form M
flattened ball,
carbide steel diamond grip

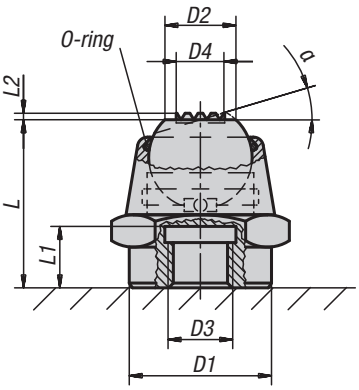


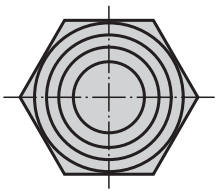

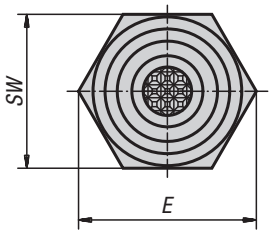


Type:
K0283.1061
K0283.1101
K0283.1161

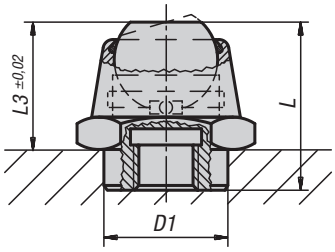


Type:
K0283.9061
K0283.9101
K0283.9161

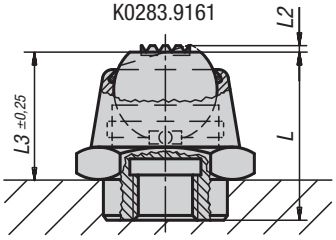

**Material:**
Body steel.
Ball rust and acid resistant steel.
Form M with carbide insert.

**Version:**
Body black oxidised.
Ball bright.

**Sample order:**
K0283.108

**Note:**
Self-aligning pads are used to support and clamp unmachined and machined workpieces. They also serve as stops, supports and thrust pads in fixture and toolmaking.
Grub screws or threaded studs can be screwed and glued into thread D3 making a self-aligning pad with external thread.

Ball secured against rotation.

**Advantages:**
- Self-aligning pads can be swiveled.
- High load forces can be absorbed.
- The built-in o-ring keeps dirt and foreign particles out, which in turn guarantees reliable operation.

## KIPP Self-aligning pads swivel angle 14° and 20°

| Order No. Form C | Order No. Form M | α | D1 | D2 | D3 | D4 | L | L1 | L2 | L3 | E | SW | Ball-Ø | Load rating max. kN (static load only) |
|---|---|---|---|---|---|---|---|---|---|---|---|---|---|---|
| **K0283.1061** | **K0283.9061** | 14° | 12 | 7 | M6 | -/5 | 17,5 | 6 | -/0,4 | 12,5 | 19,6 | 17 | 10 | 14 |
| **K0283.106** | **K0283.906** | 14° | 16 | 7 | M6 | -/5 | 17,5 | 6 | -/0,4 | - | 19,6 | 17 | 10 | 14 |
| **K0283.108** | **K0283.908** | 20° | 22 | 11 | M8 | -/7,5 | 26 | 9 | -/0,8 | - | 27,7 | 24 | 16 | 34 |
| **K0283.1101** | **K0283.9101** | 20° | 18 | 11 | M10 | -/7,5 | 26 | 9 | -/0,8 | 20 | 27,7 | 24 | 16 | 34 |
| **K0283.110** | **K0283.910** | 20° | 22 | 11 | M10 | -/7,5 | 26 | 9 | -/0,8 | - | 27,7 | 24 | 16 | 34 |
| **K0283.112** | **K0283.912** | 20° | 22 | 11 | M12 | -/7,5 | 26 | 9 | -/0,8 | - | 27,7 | 24 | 16 | 34 |
| **K0283.1161** | **K0283.9161** | 20° | 26 | 18 | M16 | -/13 | 40 | 15 | -/0,6 | 30 | 41,6 | 36 | 25 | 90 |
| **K0283.116** | **K0283.916** | 20° | 34 | 18 | M16 | -/13 | 40 | 15 | -/0,6 | - | 41,6 | 36 | 25 | 90 |
| **K0283.120** | **K0283.920** | 20° | 34 | 18 | M20 | -/13 | 40 | 15 | -/0,6 | - | 41,6 | 36 | 25 | 90 |

# Self-aligning pads

with O-ring

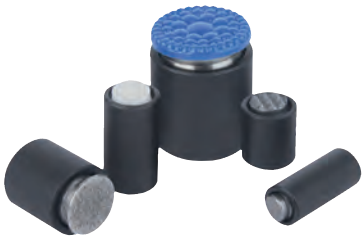

Form C
flattened steel ball, flat face

Form K
flattened POM ball, flat face

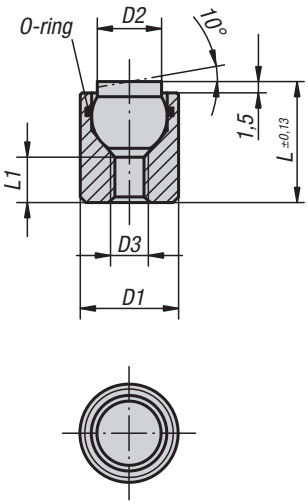


Form F
flattened steel ball,
diamond grip

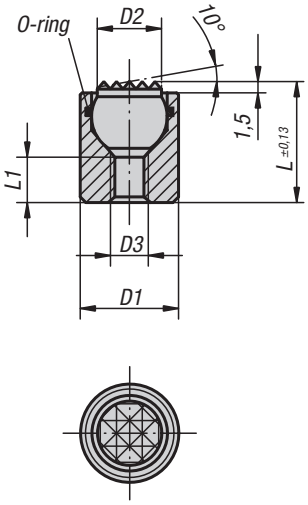


Form O
stainless steel ball,
diamond impregnated

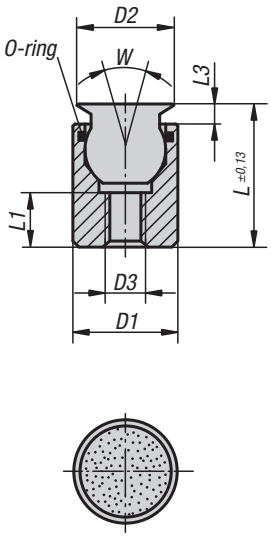


Form P
stainless steel ball
PUR surface

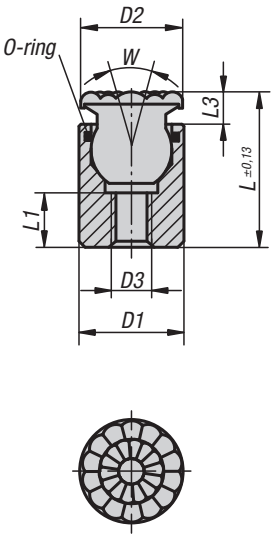


**Material:**
Body carbon steel.
Ball:
Form C, F tool steel.
Form K POM.
Form O stainless steel diamond impregnated.
Form P stainless steel with polyurethane face.

**Version:**
Body tempered, black oxidised.
Ball:
Form C, F hardened, black oxidised.
Form K POM ball, white.
Form O surface comparable to 100 grade abrasive grit.
Form P polyurethane, Shore hardness 60°.

**Sample order:**
K0284.704X012

**Note:**
Self-aligning pads are used to support and clamp unmachined and machined workpieces.
They also serve as stops, supports and thrust pads in fixtures and toolmaking.

Ball secured against rotation.

Form O: The abrasive diamond surface is fused firmly to the ball. It is ideally suited to supporting smooth or slippery applications with a minimum of clamping pressure. This allows the diamond particles to get a firm grip on a very small area with minimum damage to the surface. The diamond surface offers excellent wear resistance.

Form P: The polyurethane surface is permanently vulcanised on the ball. It is abrasion-resistant and does not discolour. Offers optimum protection against damage to delicate surfaces. The pearl-like surface gives a firm grip and allows air to escape so as to prevent any suction effect between the contact surface and the self-aligning pads.

**Advantages:**
The built-in O-ring holds the ball in place and keeps dirt and foreign particles out ensuring smooth and even movement.

KIRÁLY TRADING KFT H-1151 Budapest Mogyoród útja 12 - 14 tel: 061307-3801 Email:pzoli@kiralytrading.hu

# Self-aligning pads

with O-ring

## KIPP Self-aligning pads with O-ring

| Order No. | Form | D1 | D2 | D3 | L | L1 | Ball-Ø | Load rating max. kN (static load only) |
|---|---|---|---|---|---|---|---|---|
| **K0284.104X012** | C | 10 | 6 | M4 | 12 | 4,5 | 7 | 12 |
| **K0284.104X025** | C | 10 | 6 | M4 | 25 | 12 | 7 | 12 |
| **K0284.105X016** | C | 13 | 8,5 | M5 | 16 | 5 | 10 | 20 |
| **K0284.105X025** | C | 13 | 8,5 | M5 | 25 | 12 | 10 | 20 |

| Order No. | Form | D1 | D2 | D3 | L | L1 | Ball-Ø | Load rating max. kN (static load only) |
|---|---|---|---|---|---|---|---|---|
| **K0284.304X012** | F | 10 | 6 | M4 | 12 | 4,5 | 7 | 12 |
| **K0284.304X025** | F | 10 | 6 | M4 | 25 | 12 | 7 | 12 |
| **K0284.305X016** | F | 13 | 8,5 | M5 | 16 | 5 | 10 | 20 |
| **K0284.305X025** | F | 13 | 8,5 | M5 | 25 | 12 | 10 | 20 |

| Order No. | Form | D1 | D2 | D3 | L | L1 | Ball-Ø | Load rating max. kN (static load only) |
|---|---|---|---|---|---|---|---|---|
| **K0284.704X012** | K | 10 | 6 | M4 | 12 | 4,5 | 7 | 2 |
| **K0284.704X025** | K | 10 | 6 | M4 | 25 | 12 | 7 | 2 |
| **K0284.705X016** | K | 13 | 8,5 | M5 | 16 | 5 | 10 | 4 |
| **K0284.705X025** | K | 13 | 8,5 | M5 | 25 | 12 | 10 | 4 |

| Order No. | Form | D1 | D2 | D3 | L | L1 | L3 | W | Ball-Ø | Load rating max. kN (static load only) |
|---|---|---|---|---|---|---|---|---|---|---|
| **K0284.504X012** | O | 10 | 8 | M4 | 12,5 | 3,5 | 2 | 28 | 7 | 11,5 |
| **K0284.504X025** | O | 10 | 8 | M4 | 25,5 | 9 | 2 | 28 | 7 | 11,5 |
| **K0284.505X017** | O | 13 | 11 | M5 | 17,5 | 6,5 | 3 | 28 | 10 | 19,8 |
| **K0284.505X026** | O | 13 | 11 | M5 | 26,5 | 9 | 3 | 28 | 10 | 19,8 |
| **K0284.506X021** | O | 17 | 14 | M6 | 21 | 7,5 | 3 | 28 | 13 | 27,4 |
| **K0284.508X024** | O | 19 | 19 | M8 | 24 | 8,5 | 4 | 24 | 15 | 38,6 |
| **K0284.510X028** | O | 24 | 21 | M10 | 28 | 9 | 4 | 24 | 20 | 58,3 |

| Order No. | Form | D1 | D2 | D3 | L | L1 | L3 | W | Ball-Ø |
|---|---|---|---|---|---|---|---|---|---|
| **K0284.604X014** | P | 10 | 10 | M4 | 14,5 | 3,5 | 4 | 28 | 7 |
| **K0284.604X027** | P | 10 | 10 | M4 | 27,5 | 9 | 4 | 28 | 7 |
| **K0284.605X019** | P | 13 | 13 | M5 | 19,5 | 6,5 | 5 | 28 | 10 |
| **K0284.605X028** | P | 13 | 13 | M5 | 28,5 | 9 | 5 | 28 | 10 |
| **K0284.606X023** | P | 17 | 16 | M6 | 23 | 7,5 | 5 | 28 | 13 |
| **K0284.608X026** | P | 19 | 21 | M8 | 26 | 8,5 | 6 | 24 | 15 |
| **K0284.610X030** | P | 24 | 23 | M10 | 30 | 9 | 6 | 24 | 20 |

KIRÁLY TRADING KFT H-1151 Budapest Mogyoród útja 12 - 14 tel: 061307-3801 Email:pzoli@kiralytrading.hu

# Self-aligning pads

with O-ring and exchangeable inserts

Form C
steel insert, flat face

Form E
stainless steel insert,
flat face

Form F
diamond grip insert

Form M
carbide steel
diamond grip insert

Form K
POM insert, flat face

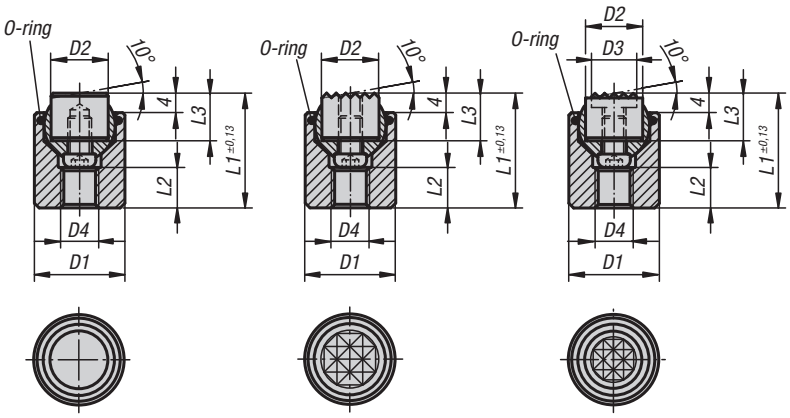


Form O
stainless steel insert
diamond impregnated

Form P
stainless steel insert
PUR surface

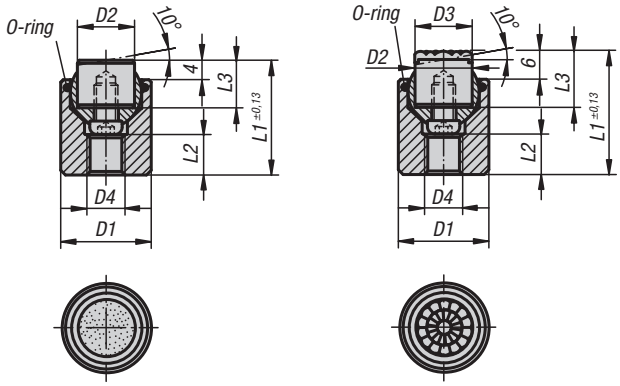


**Material:**
Body carbon steel.
Ball rust and acid resistant steel.
Inserts:
Form C, F, M tool steel
Form K POM
Form E stainless steel.
Form O stainless steel diamond impregnated.
Form P stainless steel with polyurethane surface.

**Version:**
Body tempered, black oxidised.
Ball hardened, bright.
Inserts:
Form C, F hardened, black oxidised.
Form M with carbide serrations, black oxidised.
Form K white.
Form E hardened, bright.
Form O diamond impregnated surface comparable to 100 grade abrasive grit.
Form P polyurethane surface, hardness 60° Shore.

**Sample order:**
K0285.736X036

**Note:**
Self-aligning pads are used to support and clamp unmachined and machined workpieces.
They can also be used as stops, supports and thrust pads in fixtures and toolmaking.
The ball can be removed from the housing by applying light pressure to the socket head screw.

Ball secured against rotation.

**Advantages:**
Highly cost-effective as inserts can be exchanged.
The built-in O-ring holds the ball in place and keeps dirt and foreign particles out, ensuring uniform movement.

## KIPP Self-aligning pads with O-ring and exchangeable inserts

| Order No. | Form | D1 | D2 | D4 | L1 | L2 | L3 | Ball-Ø | Load rating max. kN (static load only) | Order No. steel insert |
|---|---|---|---|---|---|---|---|---|---|---|
| **K0285.117X022** | C | 17 | 10 | M6 | 22 | 7 | 10 | 13 | 28 | K0385.10108 |
| **K0285.119X024** | C | 19 | 12 | M8 | 24 | 8 | 10 | 15 | 39 | K0385.12108 |
| **K0285.124X028** | C | 24 | 16 | M10 | 28 | 8 | 10 | 20 | 58 | K0385.16108 |
| **K0285.130X030** | C | 30 | 20 | M12 | 30 | 9 | 10 | 23 | 95 | K0385.20108 |
| **K0285.136X036** | C | 36 | 25 | M12 | 36 | 11 | 10 | 28 | 136 | K0385.25108 |

KIRÁLY TRADING KFT H-1151 Budapest Mogyoród útja 12 - 14 tel: 061307-3801 Email:pzoli@kiralytrading.hu

| Order No. | Form | D1 | D2 | D4 | L1 | L2 | L3 | Ball-Ø | Load rating max. kN (static load only) | Approx. weight kg | Order No. stainless steel insert |
|---|---|---|---|---|---|---|---|---|---|---|---|
| **K0285.236X036** | E | 36 | 25 | M12 | 36 | 11 | 10 | 28 | 136 | 0,251 | K0385.25102 |
| **K0285.219X024** | E | 19 | 12 | M8 | 24 | 8 | 10 | 15 | 39 | 0,043 | K0385.12102 |
| **K0285.217X022** | E | 17 | 10 | M6 | 22 | 7 | 10 | 13 | 28 | 0,031 | K0385.10102 |
| **K0285.224X028** | E | 24 | 16 | M10 | 28 | 8 | 10 | 20 | 58 | 0,081 | K0385.16102 |
| **K0285.230X030** | E | 30 | 20 | M12 | 30 | 9 | 10 | 23 | 95 | 0,139 | K0385.20102 |

| Order No. | Form | D1 | D2 | D4 | L1 | L2 | L3 | Ball-Ø | Load rating max. kN (static load only) | Order No. gripper |
|---|---|---|---|---|---|---|---|---|---|---|
| **K0285.317X022** | F | 17 | 10 | M6 | 22 | 7 | 10 | 13 | 28 | K0385.1010 |
| **K0285.319X024** | F | 19 | 12 | M8 | 24 | 8 | 10 | 15 | 39 | K0385.1210 |
| **K0285.324X028** | F | 24 | 16 | M10 | 28 | 8 | 10 | 20 | 58 | K0385.1610 |
| **K0285.330X030** | F | 30 | 20 | M12 | 30 | 9 | 10 | 23 | 95 | K0385.2010 |
| **K0285.336X036** | F | 36 | 25 | M12 | 36 | 11 | 10 | 28 | 136 | K0385.2510 |

| Order No. | Form | D1 | D2 | D4 | L1 | L2 | L3 | Ball-Ø | Load rating max. kN (static load only) | Order No. POM insert |
|---|---|---|---|---|---|---|---|---|---|---|
| **K0285.717X022** | K | 17 | 10 | M6 | 22 | 7 | 10 | 13 | 4 | K0385.10109 |
| **K0285.719X024** | K | 19 | 12 | M8 | 24 | 8 | 10 | 15 | 7 | K0385.12109 |
| **K0285.724X028** | K | 24 | 16 | M10 | 28 | 8 | 10 | 20 | 14 | K0385.16109 |
| **K0285.730X030** | K | 30 | 20 | M12 | 30 | 9 | 10 | 23 | 27 | K0385.20109 |
| **K0285.736X036** | K | 36 | 25 | M12 | 36 | 11 | 10 | 28 | 47 | K0385.25109 |

| Order No. | Form | D1 | D2 | D3 | D4 | L1 | L2 | L3 | Ball-Ø | Load rating max. kN (static load only) | Order No. gripper |
|---|---|---|---|---|---|---|---|---|---|---|---|
| **K0285.930X030** | M | 30 | 20 | 15,9 | M12 | 30 | 9 | 10 | 23 | 95 | K0385.20107 |
| **K0285.917X022** | M | 17 | 10 | 7,9 | M6 | 22 | 7 | 10 | 13 | 28 | K0385.10107 |
| **K0285.924X028** | M | 24 | 16 | 12,7 | M10 | 28 | 8 | 10 | 20 | 58 | K0385.16107 |
| **K0285.919X024** | M | 19 | 12 | 9,5 | M8 | 24 | 8 | 10 | 15 | 39 | K0385.12107 |
| **K0285.936X036** | M | 36 | 25 | 19 | M12 | 36 | 11 | 10 | 28 | 136 | K0385.25107 |

| Order No. | Form | D1 | D2 | D4 | L1 | L2 | L3 | Ball-Ø | Load rating max. kN (static load only) | Approx. weight kg | Order No. stainless steel insert, diamond surface |
|---|---|---|---|---|---|---|---|---|---|---|---|
| **K0285.517X022** | O | 17 | 10 | M6 | 22 | 7 | 10 | 13 | 28 | 0,031 | K0385.10105 |
| **K0285.519X024** | O | 19 | 12 | M8 | 24 | 8 | 10 | 15 | 39 | 0,043 | K0385.12105 |
| **K0285.524X028** | O | 24 | 16 | M10 | 28 | 8 | 10 | 20 | 58 | 0,081 | K0385.16105 |
| **K0285.530X030** | O | 30 | 20 | M12 | 30 | 9 | 10 | 23 | 95 | 0,139 | K0385.20105 |
| **K0285.536X036** | O | 36 | 25 | M12 | 36 | 11 | 10 | 28 | 136 | 0,251 | K0385.25105 |

| Order No. | Form | D1 | D2 | D3 | D4 | L1 | L2 | L3 | Ball-Ø | Approx. weight kg | Order No. stainless steel insert, polyurethane surface |
|---|---|---|---|---|---|---|---|---|---|---|---|
| **K0285.617X024** | P | 17 | 10 | 10 | M6 | 24 | 7 | 12 | 13 | 0,031 | K0385.10126 |
| **K0285.619X026** | P | 19 | 12 | 13 | M8 | 26 | 8 | 12 | 15 | 0,043 | K0385.12126 |
| **K0285.624X030** | P | 24 | 16 | 16 | M10 | 30 | 8 | 12 | 20 | 0,081 | K0385.16126 |
| **K0285.630X032** | P | 30 | 20 | 21 | M12 | 32 | 9 | 12 | 23 | 0,139 | K0385.20126 |
| **K0285.636X038** | P | 36 | 25 | 27 | M12 | 38 | 11 | 12 | 28 | 0,251 | K0385.25126 |

KIRÁLY TRADING KFT H-1151 Budapest Mogyoród útja 12 - 14 tel: 061307-3801 Email:pzoli@kiralytrading.hu

# Self-aligning pads adjustable

Form C
flattened ball, flat face

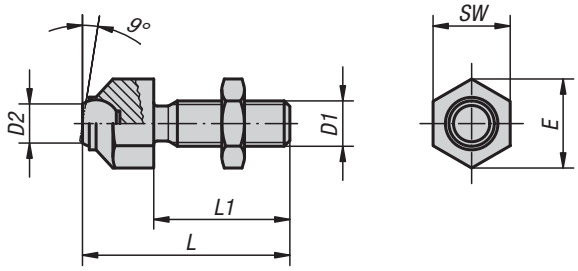


Form F
flattened ball, diamond grip

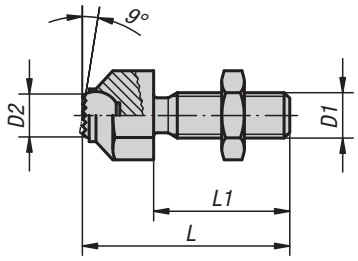


**Material:**
Steel.

**Version:**
Housing tempered and manganese phosphated.
Ball hardened, bright.
Nut black oxidised.

**Sample order:**
K0287.316

**Note:**
Ball secured against rotation.

## KIPP Self-aligning pads adjustable

| Order No. | Form | D1 | D2 | L | L1 | E | SW | Ball-Ø | Load rating max. kN (static load only) |
|---|---|---|---|---|---|---|---|---|---|
| **K0287.108** | C | M8 | 5,8 | 36,6 | 25 | 14,5 | 13 | 8,5 | 8 |
| **K0287.110** | C | M10 | 8,6 | 45,7 | 30 | 19 | 17 | 12 | 8 |
| **K0287.112** | C | M12 | 8,6 | 50,7 | 35 | 19 | 17 | 12 | 15 |
| **K0287.116** | C | M16 | 10,5 | 60,7 | 40 | 27 | 24 | 16 | 25 |
| **K0287.120** | C | M20 | 20 | 77,3 | 50 | 33 | 30 | 25 | 90 |
| **K0287.308** | F | M8 | 5,8 | 36,6 | 25 | 14,5 | 13 | 8,5 | 8 |
| **K0287.310** | F | M10 | 8,6 | 45,7 | 30 | 19 | 17 | 12 | 8 |
| **K0287.312** | F | M12 | 8,6 | 50,7 | 35 | 19 | 17 | 12 | 15 |
| **K0287.316** | F | M16 | 10,5 | 60,7 | 40 | 27 | 24 | 16 | 25 |
| **K0287.320** | F | M20 | 20 | 77,3 | 50 | 33 | 30 | 25 | 90 |

# Notes

KIRÁLY TRADING KFT H-1151 Budapest Mogyoród útja 12 - 14 tel: 061307-3801 Email:pzoli@kiralytrading.hu

# Self-aligning pads adjustable

with O-ring

Form C
steel ball, flat face

Form F
steel ball, diamond grip

Form K
POM ball, flat face

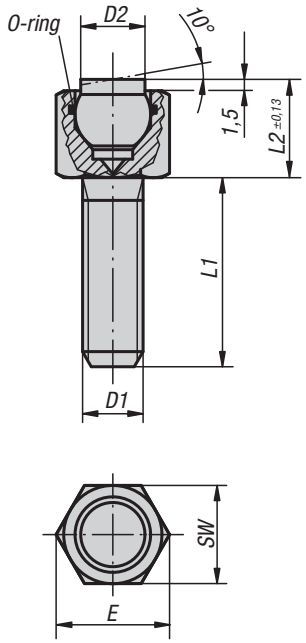


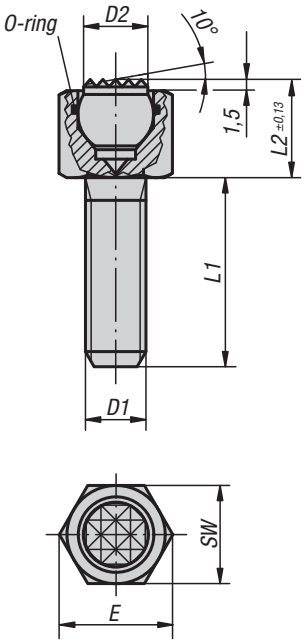


Form O
stainless steel ball
diamond impregnated

Form P
stainless steel ball
PUR surface

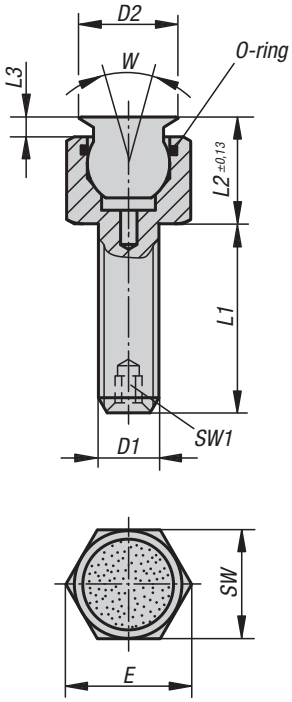


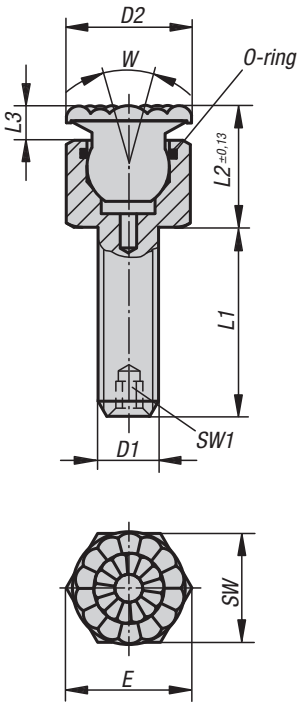


**Material:**
Body carbon steel.
Ball:
Form C, F, tool steel.
Form K POM.
Form O stainless steel diamond impregnated.
Form P stainless steel with polyurethane surface.

**Version:**
Body tempered, black oxidised.
Ball:
Form C, F hardened, black oxidised.
Form K POM ball white.
Form O surface comparable to 100 grade abrasive grit.
Form P polyurethane Shore hardness 60°.

**Sample order:**
K0288.506X012
(include length L1)

**Note:**
Self-aligning pads are used to support and clamp unmachined and machined workpieces.
They also serve as stops, supports and thrust pads in fixtures and toolmaking.

Ball secured against rotation.

Form O: The abrasive diamond surface is bonded firmly to the ball. It is ideally suited to supporting smooth or slippery applications with a minimum of clamping pressure. This allows the diamond particles to get a firm grip on a very small area with minimum damage to the surface.
The diamond surface offers excellent wear resistance.

Form P: The polyurethane surface is vulcanised firmly to the ball. It is abrasion-resistant and does not discolour.
It offers optimum protection against damage to delicate surfaces. The pearl-like surface gives a firm grip and allows air to escape so as to prevent any suction effect between the contact surface and the self-aligning pads.

**Advantages:**
The built-in O-ring holds the ball in place and keeps dirt and foreign particles out, ensuring uniform movement.

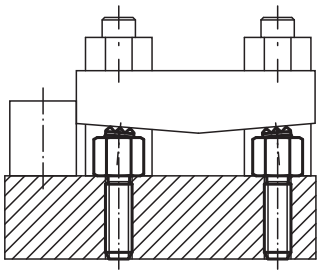

KIRÁLY TRADING KFT H-1151 Budapest Mogyoród útja 12 - 14 tel: 061307-3801 Email:pzoli@kiralytrading.hu

## KIPP Self-aligning pads adjustable with O-ring

| Order No. | Form | D1 | D2 | L1 | L2 | E | SW | Ball-Ø | Load rating max. kN (static load only) |
|---|---|---|---|---|---|---|---|---|---|
| **K0288.106X012** | C | M6 | 6 | 12 | 9,5 | 11,5 | 10 | 7 | 9 |
| **K0288.106X025** | C | M6 | 6 | 25 | 9,5 | 11,5 | 10 | 7 | 9 |
| **K0288.106X040** | C | M6 | 6 | 40 | 9,5 | 11,5 | 10 | 7 | 9 |
| **K0288.108X012** | C | M8 | 8,5 | 12 | 13 | 15 | 13 | 10 | 15 |
| **K0288.108X025** | C | M8 | 8,5 | 25 | 13 | 15 | 13 | 10 | 15 |
| **K0288.108X040** | C | M8 | 8,5 | 40 | 13 | 15 | 13 | 10 | 15 |

| Order No. | Form | D1 | D2 | L1 | L2 | E | SW | Ball-Ø | Load rating max. kN (static load only) |
|---|---|---|---|---|---|---|---|---|---|
| **K0288.306X012** | F | M6 | 6 | 12 | 9,5 | 11,5 | 10 | 7 | 9 |
| **K0288.306X025** | F | M6 | 6 | 25 | 9,5 | 11,5 | 10 | 7 | 9 |
| **K0288.306X040** | F | M6 | 6 | 40 | 9,5 | 11,5 | 10 | 7 | 9 |
| **K0288.308X012** | F | M8 | 8,5 | 12 | 13 | 15 | 13 | 10 | 15 |
| **K0288.308X025** | F | M8 | 8,5 | 25 | 13 | 15 | 13 | 10 | 15 |
| **K0288.308X040** | F | M8 | 8,5 | 40 | 13 | 15 | 13 | 10 | 15 |

| Order No. | Form | D1 | D2 | L1 | L2 | E | SW | Ball-Ø | Load rating max. kN (static load only) |
|---|---|---|---|---|---|---|---|---|---|
| **K0288.706X012** | K | M6 | 6 | 12 | 9,5 | 11,5 | 10 | 7 | 2 |
| **K0288.706X025** | K | M6 | 6 | 25 | 9,5 | 11,5 | 10 | 7 | 2 |
| **K0288.706X040** | K | M6 | 6 | 40 | 9,5 | 11,5 | 10 | 7 | 2 |
| **K0288.708X012** | K | M8 | 8,5 | 12 | 13 | 15 | 13 | 10 | 4 |
| **K0288.708X025** | K | M8 | 8,5 | 25 | 13 | 15 | 13 | 10 | 4 |
| **K0288.708X040** | K | M8 | 8,5 | 40 | 13 | 15 | 13 | 10 | 4 |

| Order No. | Form | D1 | D2 | L1 | L2 | L3 | E | SW | SW1 | W | Ball-Ø | Load rating max. kN (static load only) |
|---|---|---|---|---|---|---|---|---|---|---|---|---|
| **K0288.506X** | O | M6 | 8 | 12/25/40 | 10 | 2 | 11,5 | 10 | - | 28 | 7 | 9,2 |
| **K0288.508X** | O | M8 | 11 | 12/25/40 | 14,5 | 3 | 15 | 13 | - | 28 | 10 | 15,5 |
| **K0288.512X** | O | M12 | 19 | 20/40/60 | 19 | 4 | 21,9 | 19 | 5 | 24 | 15 | 29,8 |
| **K0288.510X** | O | M10 | 14 | 15/30/50 | 16 | 3 | 19,6 | 17 | 3 | 28 | 13 | 18,8 |
| **K0288.516X** | O | M16 | 21 | 25/50/80 | 23 | 4 | 27,7 | 24 | 6 | 24 | 20 | 50,3 |

| Order No. | Form | D1 | D2 | L1 | L2 | L3 | E | SW | SW1 | W | Ball-Ø |
|---|---|---|---|---|---|---|---|---|---|---|---|
| **K0288.612X** | P | M12 | 21 | 20/40/60 | 21 | 6 | 21,9 | 19 | 5 | 24 | 15 |
| **K0288.610X** | P | M10 | 16 | 15/30/50 | 18 | 5 | 19,6 | 17 | 3 | 28 | 13 |
| **K0288.608X** | P | M8 | 13 | 12/25/40 | 16,5 | 5 | 15 | 13 | - | 28 | 10 |
| **K0288.606X** | P | M6 | 10 | 12/25/40 | 12 | 4 | 11,5 | 10 | - | 28 | 7 |
| **K0288.616X** | P | M16 | 23 | 25/50/80 | 25 | 6 | 27,7 | 24 | 6 | 24 | 20 |

# K0289

# Self-aligning pads adjustable

with O-ring and exchangeable inserts

Form C
steel insert, flat face

Form F
diamond grip insert

Form M
carbide steel
diamond grip

Form E
stainless steel insert, flat face

Form K
POM insert, flat face

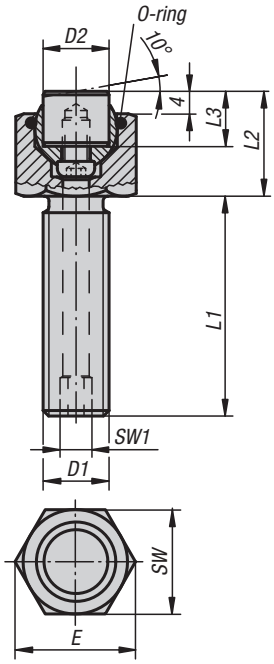


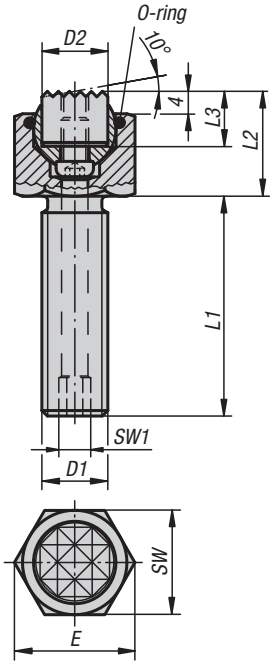


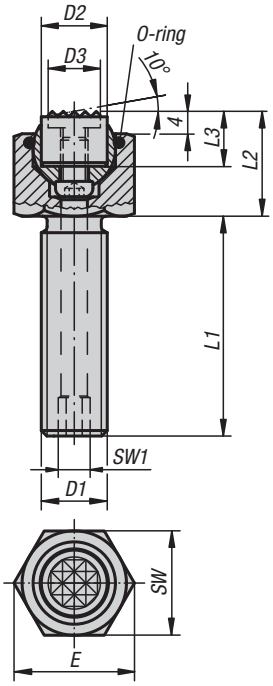


Form O
stainless steel insert
diamond impregnated

Form P
stainless steel insert,
PUR surface

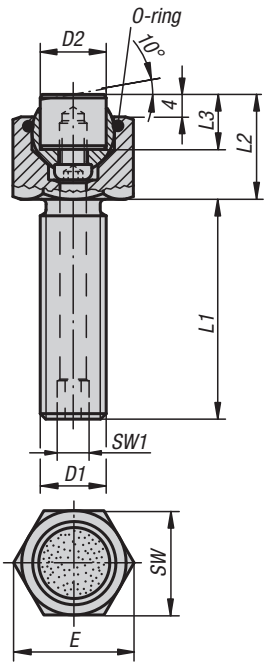


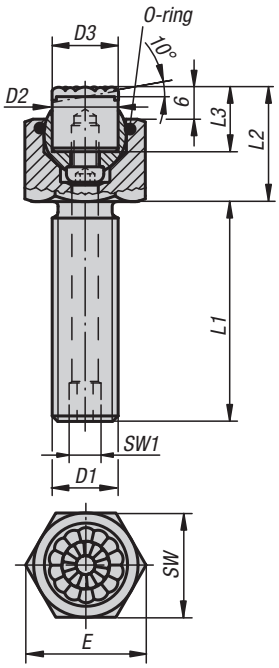


**Material:**
Body carbon steel.
Ball rust and acid resistant steel.
Inserts:
Form C, F, M tool steel
Form K POM
Form E stainless steel.
Form O stainless steel diamond impregnated.
Form P stainless steel with polyurethane surface.

**Version:**
Body tempered, black oxidised.
Ball hardened, bright.
Inserts:
Form C, F hardened, black oxidised.
Form M with carbide serrations, black oxidised.
Form K white.
Form E hardened, bright.
Form O diamond impregnated surface comparable to 100 grade abrasive grit.
Form P polyurethane surface, hardness 60° Shore.

**Sample order:**
K0289.124X100

**Note:**
Self-aligning pads are used to support and clamp unmachined and machined workpieces.
They also serve as stops, supports and thrust pads in fixtures and toolmaking.
The ball can be removed from the housing by applying light pressure to the socket head screw.

Ball secured against rotation.

**Advantages:**
Highly cost-effective as inserts can be exchanged.
The built-in O-ring holds the ball in place and keeps dirt and foreign particles out, ensuring uniform movement.

KIRÁLY TRADING KFT H-1151 Budapest Mogyoród útja 12 - 14 tel: 061307-3801 Email:pzoli@kiralytrading.hu

## KIPP Self-aligning pads adjustable with O-ring and exchangeable inserts

| Order No. | Form | D1 | D2 | L1 | L2 | L3 | E | SW | SW1 | Ball-Ø | Load rating max. kN (static load only) | Approx. weight kg | Order No. steel insert |
|---|---|---|---|---|---|---|---|---|---|---|---|---|---|
| **K0289.110X015** | C | M10 | 10 | 15 | 17 | 10 | 19,6 | 17 | 3 | 13 | 19 | 0,032 | K0385.10108 |
| **K0289.110X030** | C | M10 | 10 | 30 | 17 | 10 | 19,6 | 17 | 3 | 13 | 19 | 0,039 | K0385.10108 |
| **K0289.110X050** | C | M10 | 10 | 50 | 17 | 10 | 19,6 | 17 | 3 | 13 | 19 | 0,047 | K0385.10108 |
| **K0289.112X020** | C | M12 | 12 | 20 | 19 | 10 | 21,9 | 19 | 5 | 15 | 30 | 0,048 | K0385.12108 |
| **K0289.112X040** | C | M12 | 12 | 40 | 19 | 10 | 21,9 | 19 | 5 | 15 | 30 | 0,059 | K0385.12108 |
| **K0289.112X060** | C | M12 | 12 | 60 | 19 | 10 | 21,9 | 19 | 5 | 15 | 30 | 0,071 | K0385.12108 |
| **K0289.116X025** | C | M16 | 16 | 25 | 23 | 10 | 27,7 | 24 | 6 | 20 | 50 | 0,100 | K0385.16108 |
| **K0289.116X050** | C | M16 | 16 | 50 | 23 | 10 | 27,7 | 24 | 6 | 20 | 50 | 0,127 | K0385.16108 |
| **K0289.116X080** | C | M16 | 16 | 80 | 23 | 10 | 27,7 | 24 | 6 | 20 | 50 | 0,159 | K0385.16108 |
| **K0289.120X030** | C | M20 | 20 | 30 | 24 | 10 | 34,6 | 30 | 8 | 23 | 85 | 0,171 | K0385.20108 |
| **K0289.120X060** | C | M20 | 20 | 60 | 24 | 10 | 34,6 | 30 | 8 | 23 | 85 | 0,220 | K0385.20108 |
| **K0289.120X100** | C | M20 | 20 | 100 | 24 | 10 | 34,6 | 30 | 8 | 23 | 85 | 0,289 | K0385.20108 |
| **K0289.124X040** | C | M24 | 25 | 40 | 30 | 10 | 41,6 | 36 | 10 | 28 | 121 | 0,321 | K0385.25108 |
| **K0289.124X100** | C | M24 | 25 | 100 | 30 | 10 | 41,6 | 36 | 10 | 28 | 121 | 0,468 | K0385.25108 |

| Order No. | Form | D1 | D2 | L1 | L2 | L3 | E | SW | SW1 | Ball-Ø | Load rating max. kN (static load only) | Approx. weight kg | Order No. stainless steel insert |
|---|---|---|---|---|---|---|---|---|---|---|---|---|---|
| **K0289.210X015** | E | M10 | 10 | 15 | 17 | 10 | 19,6 | 17 | 3 | 13 | 19 | 0,032 | K0385.10102 |
| **K0289.210X030** | E | M10 | 10 | 30 | 17 | 10 | 19,6 | 17 | 3 | 13 | 19 | 0,039 | K0385.10102 |
| **K0289.210X050** | E | M10 | 10 | 50 | 17 | 10 | 19,6 | 17 | 3 | 13 | 19 | 0,047 | K0385.10102 |
| **K0289.212X020** | E | M12 | 12 | 20 | 19 | 10 | 21,9 | 19 | 5 | 15 | 30 | 0,048 | K0385.12102 |
| **K0289.212X040** | E | M12 | 12 | 40 | 19 | 10 | 21,9 | 19 | 5 | 15 | 30 | 0,059 | K0385.12102 |
| **K0289.212X060** | E | M12 | 12 | 60 | 19 | 10 | 21,9 | 19 | 5 | 15 | 30 | 0,071 | K0385.12102 |
| **K0289.216X025** | E | M16 | 16 | 25 | 23 | 10 | 27,7 | 24 | 6 | 20 | 50 | 0,100 | K0385.16102 |
| **K0289.216X050** | E | M16 | 16 | 50 | 23 | 10 | 27,7 | 24 | 6 | 20 | 50 | 0,127 | K0385.16102 |
| **K0289.216X080** | E | M16 | 16 | 80 | 23 | 10 | 27,7 | 24 | 6 | 20 | 50 | 0,159 | K0385.16102 |
| **K0289.220X030** | E | M20 | 20 | 30 | 24 | 10 | 34,6 | 30 | 8 | 23 | 85 | 0,171 | K0385.20102 |
| **K0289.220X060** | E | M20 | 20 | 60 | 24 | 10 | 34,6 | 30 | 8 | 23 | 85 | 0,220 | K0385.20102 |
| **K0289.220X100** | E | M20 | 20 | 100 | 24 | 10 | 34,6 | 30 | 8 | 23 | 85 | 0,289 | K0385.20102 |
| **K0289.224X040** | E | M24 | 25 | 40 | 30 | 10 | 41,6 | 36 | 10 | 28 | 121 | 0,321 | K0385.25102 |
| **K0289.224X100** | E | M24 | 25 | 100 | 30 | 10 | 41,6 | 36 | 10 | 28 | 121 | 0,468 | K0385.25102 |

| Order No. | Form | D1 | D2 | L1 | L2 | L3 | E | SW | SW1 | Ball-Ø | Load rating max. kN (static load only) | Approx. weight kg | Order No. gripper |
|---|---|---|---|---|---|---|---|---|---|---|---|---|---|
| **K0289.310X015** | F | M10 | 10 | 15 | 17 | 10 | 19,6 | 17 | 3 | 13 | 19 | 0,031 | K0385.1010 |
| **K0289.310X030** | F | M10 | 10 | 30 | 17 | 10 | 19,6 | 17 | 3 | 13 | 19 | 0,038 | K0385.1010 |
| **K0289.310X050** | F | M10 | 10 | 50 | 17 | 10 | 19,6 | 17 | 3 | 13 | 19 | 0,047 | K0385.1010 |
| **K0289.312X020** | F | M12 | 12 | 20 | 19 | 10 | 21,9 | 19 | 5 | 15 | 30 | 0,050 | K0385.1210 |
| **K0289.312X040** | F | M12 | 12 | 40 | 19 | 10 | 21,9 | 19 | 5 | 15 | 30 | 0,061 | K0385.1210 |
| **K0289.312X060** | F | M12 | 12 | 60 | 19 | 10 | 21,9 | 19 | 5 | 15 | 30 | 0,073 | K0385.1210 |
| **K0289.316X025** | F | M16 | 16 | 25 | 23 | 10 | 27,7 | 24 | 6 | 20 | 50 | 0,100 | K0385.1610 |
| **K0289.316X050** | F | M16 | 16 | 50 | 23 | 10 | 27,7 | 24 | 6 | 20 | 50 | 0,127 | K0385.1610 |
| **K0289.316X080** | F | M16 | 16 | 80 | 23 | 10 | 27,7 | 24 | 6 | 20 | 50 | 0,159 | K0385.1610 |
| **K0289.320X030** | F | M20 | 20 | 30 | 24 | 10 | 34,6 | 30 | 8 | 23 | 85 | 0,173 | K0385.2010 |
| **K0289.320X060** | F | M20 | 20 | 60 | 24 | 10 | 34,6 | 30 | 8 | 23 | 85 | 0,222 | K0385.2010 |
| **K0289.320X100** | F | M20 | 20 | 100 | 24 | 10 | 34,6 | 30 | 8 | 23 | 85 | 0,290 | K0385.2010 |
| **K0289.324X040** | F | M24 | 25 | 40 | 30 | 10 | 41,6 | 36 | 10 | 28 | 121 | 0,319 | K0385.2510 |
| **K0289.324X100** | F | M24 | 25 | 100 | 30 | 10 | 41,6 | 36 | 10 | 28 | 121 | 0,466 | K0385.2510 |

KIRÁLY TRADING KFT H-1151 Budapest Mogyoród útja 12 - 14 tel: 061307-3801 Email:pzoli@kiralytrading.hu

# Self-aligning pads adjustable

with O-ring and exchangeable inserts

| Order No. | Form | D1 | D2 | L1 | L2 | L3 | E | SW | SW1 | Ball-Ø | Load rating max. kN (static load only) | Approx. weight kg | Order No. POM insert |
|---|---|---|---|---|---|---|---|---|---|---|---|---|---|
| **K0289.710X015** | K | M10 | 10 | 15 | 17 | 10 | 19,6 | 17 | 3 | 13 | 4 | 0,027 | K0385.10109 |
| **K0289.710X030** | K | M10 | 10 | 30 | 17 | 10 | 19,6 | 17 | 3 | 13 | 4 | 0,034 | K0385.10109 |
| **K0289.710X050** | K | M10 | 10 | 50 | 17 | 10 | 19,6 | 17 | 3 | 13 | 4 | 0,043 | K0385.10109 |
| **K0289.712X020** | K | M12 | 12 | 20 | 19 | 10 | 21,9 | 19 | 5 | 15 | 7 | 0,041 | K0385.12109 |
| **K0289.712X040** | K | M12 | 12 | 40 | 19 | 10 | 21,9 | 19 | 5 | 15 | 7 | 0,052 | K0385.12109 |
| **K0289.712X060** | K | M12 | 12 | 60 | 19 | 10 | 21,9 | 19 | 5 | 15 | 7 | 0,064 | K0385.12109 |
| **K0289.716X025** | K | M16 | 16 | 25 | 23 | 10 | 27,7 | 24 | 6 | 20 | 14 | 0,088 | K0385.16109 |
| **K0289.716X050** | K | M16 | 16 | 50 | 23 | 10 | 27,7 | 24 | 6 | 20 | 14 | 0,115 | K0385.16109 |
| **K0289.716X080** | K | M16 | 16 | 80 | 23 | 10 | 27,7 | 24 | 6 | 20 | 14 | 0,147 | K0385.16109 |
| **K0289.720X030** | K | M20 | 20 | 30 | 24 | 10 | 34,6 | 30 | 8 | 23 | 27 | 0,152 | K0385.20109 |
| **K0289.720X060** | K | M20 | 20 | 60 | 24 | 10 | 34,6 | 30 | 8 | 23 | 27 | 0,202 | K0385.20109 |
| **K0289.720X100** | K | M20 | 20 | 100 | 24 | 10 | 34,6 | 30 | 8 | 23 | 27 | 0,270 | K0385.20109 |
| **K0289.724X040** | K | M24 | 25 | 40 | 30 | 10 | 41,6 | 36 | 10 | 28 | 47 | 0,291 | K0385.25109 |
| **K0289.724X100** | K | M24 | 25 | 100 | 30 | 10 | 41,6 | 36 | 10 | 28 | 47 | 0,438 | K0385.25109 |

| Order No. | Form | D1 | D2 | D3 | L1 | L2 | L3 | E | SW | SW1 | Ball-Ø | Load rating max. kN (static load only) | Order No. gripper |
|---|---|---|---|---|---|---|---|---|---|---|---|---|---|
| **K0289.910X015** | M | M10 | 10 | 7,9 | 15 | 17 | 10 | 19,6 | 17 | 3 | 13 | 19 | K0385.10107 |
| **K0289.910X030** | M | M10 | 10 | 7,9 | 30 | 17 | 10 | 19,6 | 17 | 3 | 13 | 19 | K0385.10107 |
| **K0289.910X050** | M | M10 | 10 | 7,9 | 50 | 17 | 10 | 19,6 | 17 | 3 | 13 | 19 | K0385.10107 |
| **K0289.912X020** | M | M12 | 12 | 9,5 | 20 | 19 | 10 | 21,9 | 19 | 5 | 15 | 30 | K0385.12107 |
| **K0289.912X040** | M | M12 | 12 | 9,5 | 40 | 19 | 10 | 21,9 | 19 | 5 | 15 | 30 | K0385.12107 |
| **K0289.912X060** | M | M12 | 12 | 9,5 | 60 | 19 | 10 | 21,9 | 19 | 5 | 15 | 30 | K0385.12107 |
| **K0289.916X025** | M | M16 | 16 | 12,7 | 25 | 23 | 10 | 27,7 | 24 | 6 | 20 | 50 | K0385.16107 |
| **K0289.916X050** | M | M16 | 16 | 12,7 | 50 | 23 | 10 | 27,7 | 24 | 6 | 20 | 50 | K0385.16107 |
| **K0289.916X080** | M | M16 | 16 | 12,7 | 80 | 23 | 10 | 27,7 | 24 | 6 | 20 | 50 | K0385.16107 |
| **K0289.920X030** | M | M20 | 20 | 15,9 | 30 | 24 | 10 | 34,6 | 30 | 8 | 23 | 85 | K0385.20107 |
| **K0289.920X060** | M | M20 | 20 | 15,9 | 60 | 24 | 10 | 34,6 | 30 | 8 | 23 | 85 | K0385.20107 |
| **K0289.920X100** | M | M20 | 20 | 15,9 | 100 | 24 | 10 | 34,6 | 30 | 8 | 23 | 85 | K0385.20107 |
| **K0289.924X040** | M | M24 | 25 | 19 | 40 | 30 | 10 | 41,6 | 36 | 10 | 28 | 121 | K0385.25107 |
| **K0289.924X100** | M | M24 | 25 | 19 | 100 | 30 | 10 | 41,6 | 36 | 10 | 28 | 121 | K0385.25107 |

KIRÁLY TRADING KFT H-1151 Budapest Mogyoród útja 12 - 14 tel: 061307-3801 Email:pzoli@kiralytrading.hu

# Self-aligning pads adjustable

with O-ring and exchangeable inserts

| Order No. | Form | D1 | D2 | L1 | L2 | L3 | E | SW | SW1 | Ball-Ø | Load rating max. kN (static load only) | Order No. stainless steel insert, diamond surface |
|---|---|---|---|---|---|---|---|---|---|---|---|---|
| **K0289.510X015** | 0 | M10 | 10 | 15 | 17 | 10 | 19,6 | 17 | 3 | 13 | 19 | K0385.10105 |
| **K0289.510X030** | 0 | M10 | 10 | 30 | 17 | 10 | 19,6 | 17 | 3 | 13 | 19 | K0385.10105 |
| **K0289.510X050** | 0 | M10 | 10 | 50 | 17 | 10 | 19,6 | 17 | 3 | 13 | 19 | K0385.10105 |
| **K0289.512X020** | 0 | M12 | 12 | 20 | 19 | 10 | 21,9 | 19 | 5 | 15 | 30 | K0385.12105 |
| **K0289.512X040** | 0 | M12 | 12 | 40 | 19 | 10 | 21,9 | 19 | 5 | 15 | 30 | K0385.12105 |
| **K0289.512X060** | 0 | M12 | 12 | 60 | 19 | 10 | 21,9 | 19 | 5 | 15 | 30 | K0385.12105 |
| **K0289.516X025** | 0 | M16 | 16 | 25 | 23 | 10 | 27,7 | 24 | 6 | 20 | 50 | K0385.16105 |
| **K0289.516X050** | 0 | M16 | 16 | 50 | 23 | 10 | 27,7 | 24 | 6 | 20 | 50 | K0385.16105 |
| **K0289.516X080** | 0 | M16 | 16 | 80 | 23 | 10 | 27,7 | 24 | 6 | 20 | 50 | K0385.16105 |
| **K0289.520X030** | 0 | M20 | 20 | 30 | 24 | 10 | 34,6 | 30 | 8 | 23 | 85 | K0385.20105 |
| **K0289.520X060** | 0 | M20 | 20 | 60 | 24 | 10 | 34,6 | 30 | 8 | 23 | 85 | K0385.20105 |
| **K0289.520X100** | 0 | M20 | 20 | 100 | 24 | 10 | 34,6 | 30 | 8 | 23 | 85 | K0385.20105 |
| **K0289.524X040** | 0 | M24 | 25 | 40 | 30 | 10 | 41,6 | 36 | 10 | 28 | 121 | K0385.25105 |
| **K0289.524X100** | 0 | M24 | 25 | 100 | 30 | 10 | 41,6 | 36 | 10 | 28 | 121 | K0385.25105 |

| Order No. | Form | D1 | D2 | D3 | L1 | L2 | L3 | E | SW | SW1 | Ball-Ø | Approx. weight kg | Order No. stainless steel insert, polyurethane surface |
|---|---|---|---|---|---|---|---|---|---|---|---|---|---|
| **K0289.610X015** | P | M10 | 10 | 10 | 15 | 19 | 12 | 19,6 | 17 | 3 | 13 | 0,032 | K0385.10126 |
| **K0289.610X030** | P | M10 | 10 | 10 | 30 | 19 | 12 | 19,6 | 17 | 3 | 13 | 0,039 | K0385.10126 |
| **K0289.610X050** | P | M10 | 10 | 10 | 50 | 19 | 12 | 19,6 | 17 | 3 | 13 | 0,047 | K0385.10126 |
| **K0289.612X020** | P | M12 | 12 | 13 | 20 | 21 | 12 | 21,9 | 19 | 5 | 15 | 0,049 | K0385.12126 |
| **K0289.612X040** | P | M12 | 12 | 13 | 40 | 21 | 12 | 21,9 | 19 | 5 | 15 | 0,059 | K0385.12126 |
| **K0289.612X060** | P | M12 | 12 | 13 | 60 | 21 | 12 | 21,9 | 19 | 5 | 15 | 0,071 | K0385.12126 |
| **K0289.616X025** | P | M16 | 16 | 16 | 25 | 25 | 12 | 27,7 | 24 | 6 | 20 | 0,100 | K0385.16126 |
| **K0289.616X050** | P | M16 | 16 | 16 | 50 | 25 | 12 | 27,7 | 24 | 6 | 20 | 0,127 | K0385.16126 |
| **K0289.616X080** | P | M16 | 16 | 16 | 80 | 25 | 12 | 27,7 | 24 | 6 | 20 | 0,159 | K0385.16126 |
| **K0289.620X030** | P | M20 | 20 | 21 | 30 | 26 | 12 | 34,6 | 30 | 8 | 23 | 0,171 | K0385.20126 |
| **K0289.620X060** | P | M20 | 20 | 21 | 60 | 26 | 12 | 34,6 | 30 | 8 | 23 | 0,220 | K0385.20126 |
| **K0289.620X100** | P | M20 | 20 | 21 | 100 | 26 | 12 | 34,6 | 30 | 8 | 23 | 0,289 | K0385.20126 |
| **K0289.624X040** | P | M24 | 25 | 27 | 40 | 32 | 12 | 41,6 | 36 | 10 | 28 | 0,321 | K0385.25126 |
| **K0289.624X100** | P | M24 | 25 | 27 | 100 | 32 | 12 | 41,6 | 36 | 10 | 28 | 0,468 | K0385.25126 |

KIRÁLY TRADING KFT H-1151 Budapest Mogyoród útja 12 - 14 tel: 061307-3801 Email:pzoli@kiralytrading.hu

# Self-aligning pads adjustable

with O-ring and hexagon socket

Form C
flattened steel ball,
flat face

Form K
flattened POM ball, flat face

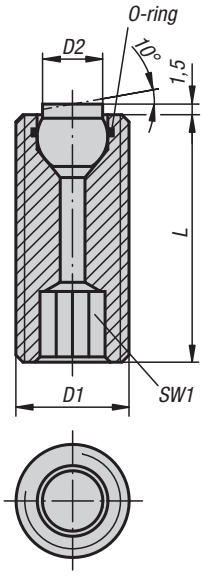


Form F
flattened steel ball,
diamond grip

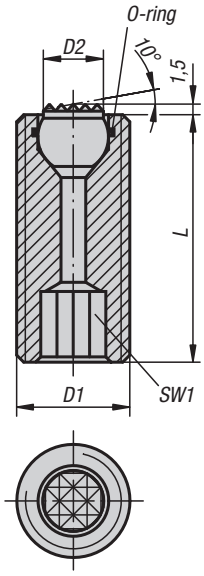


Form O
stainless steel ball
diamond impregnated

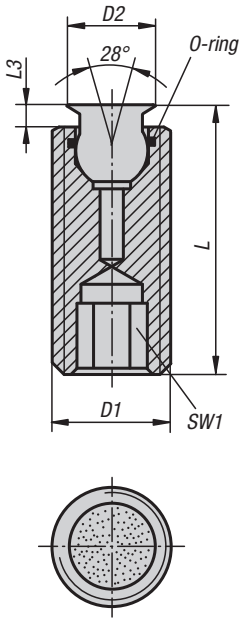


Form P
stainless steel ball,
PUR surface

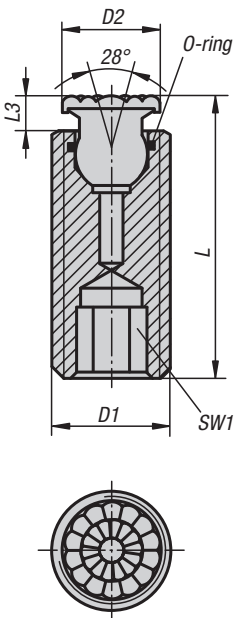


**Material:**
Body carbon steel.
Ball tool steel, Form K POM

**Version:**
Body tempered.
Ball hardened, black oxidised.
POM ball white.

**Sample order:**
K0290.510X026
(include length L)

**Note:**
Self-aligning pads are used to support and clamp unmachined and machined workpieces.
They can also be used as stops, supports and thrust pads in fixtures and toolmaking.

Ball secured against rotation.

**Advantages:**
The built-in O-ring holds the ball in place and keeps dirt and foreign particles out, ensuring uniform movement.
The hexagon socket allows easy adjustment and positioning in through holes.

KIRÁLY TRADING KFT H-1151 Budapest Mogyoród útja 12 - 14 tel: 061307-3801 Email:pzoli@kiralytrading.hu

# Self-aligning pads adjustable

with O-ring and hexagon socket

## KIPP Self-aligning pads adjustable with O-ring and hexagon socket

| Order No. | Form | D1 | D2 | L | SW1 | Ball-Ø | Load rating max. kN (static load only) |
|---|---|---|---|---|---|---|---|
| **K0290.112X025** | C | M12 | 6 | 25 | 6 | 7 | 15 |
| **K0290.112X035** | C | M12 | 6 | 35 | 6 | 7 | 15 |
| **K0290.112X050** | C | M12 | 6 | 50 | 6 | 7 | 15 |
| **K0290.116X025** | C | M16 | 8,5 | 25 | 8 | 10 | 23 |
| **K0290.116X035** | C | M16 | 8,5 | 35 | 8 | 10 | 23 |
| **K0290.116X050** | C | M16 | 8,5 | 50 | 8 | 10 | 23 |

| Order No. | Form | D1 | D2 | L | SW1 | Ball-Ø | Load rating max. kN (static load only) |
|---|---|---|---|---|---|---|---|
| **K0290.312X025** | F | M12 | 6 | 25 | 6 | 7 | 15 |
| **K0290.312X035** | F | M12 | 6 | 35 | 6 | 7 | 15 |
| **K0290.312X050** | F | M12 | 6 | 50 | 6 | 7 | 15 |
| **K0290.316X025** | F | M16 | 8,5 | 25 | 8 | 10 | 23 |
| **K0290.316X035** | F | M16 | 8,5 | 35 | 8 | 10 | 23 |
| **K0290.316X050** | F | M16 | 8,5 | 50 | 8 | 10 | 23 |

| Order No. | Form | D1 | D2 | L | SW1 | Ball-Ø | Load rating max. kN (static load only) |
|---|---|---|---|---|---|---|---|
| **K0290.712X025** | K | M12 | 6 | 25 | 6 | 7 | 2 |
| **K0290.712X035** | K | M12 | 6 | 35 | 6 | 7 | 2 |
| **K0290.712X050** | K | M12 | 6 | 50 | 6 | 7 | 2 |
| **K0290.716X025** | K | M16 | 8,5 | 25 | 8 | 10 | 4 |
| **K0290.716X035** | K | M16 | 8,5 | 35 | 8 | 10 | 4 |
| **K0290.716X050** | K | M16 | 8,5 | 50 | 8 | 10 | 4 |

| Order No. | Form | D1 | D2 | L | L3 | SW1 | Ball-Ø | Load rating max. kN (static load only) |
|---|---|---|---|---|---|---|---|---|
| **K0290.510X** | O | M10 | 6 | 26,5/36,5/51,5 | 1,5 | 5 | 5 | - |
| **K0290.512X** | O | M12 | 8 | 27/37/52 | 2 | 6 | 7 | 15,4 |
| **K0290.516X** | O | M16 | 11 | 28/38/53 | 3 | 8 | 10 | 23,3 |
| **K0290.520X** | O | M20 | 14 | 33/53/73 | 3 | 10 | 13 | 37,7 |

| Order No. | Form | D1 | D2 | L | L3 | SW1 | Ball-Ø |
|---|---|---|---|---|---|---|---|
| **K0290.610X** | P | M10 | 8 | 28,5/38,5/53,5 | 3,5 | 5 | 5 |
| **K0290.612X** | P | M12 | 10 | 29/39/54 | 4 | 6 | 7 |
| **K0290.616X** | P | M16 | 13 | 30/40/55 | 5 | 8 | 10 |
| **K0290.620X** | P | M20 | 16 | 35/55/75 | 5 | 10 | 13 |

KIRÁLY TRADING KFT H-1151 Budapest Mogyoród útja 12 - 14 tel: 061307-3801 Email:pzoli@kiralytrading.hu

# Self-aligning pads adjustable

with O-ring, exchangeable inserts and hexagon socket

Form C
steel insert, flat face

Form E
stainless steel insert, flat face

Form F
diamond grip insert

Form M
carbide steel
diamond grip

Form K
POM insert, flat face

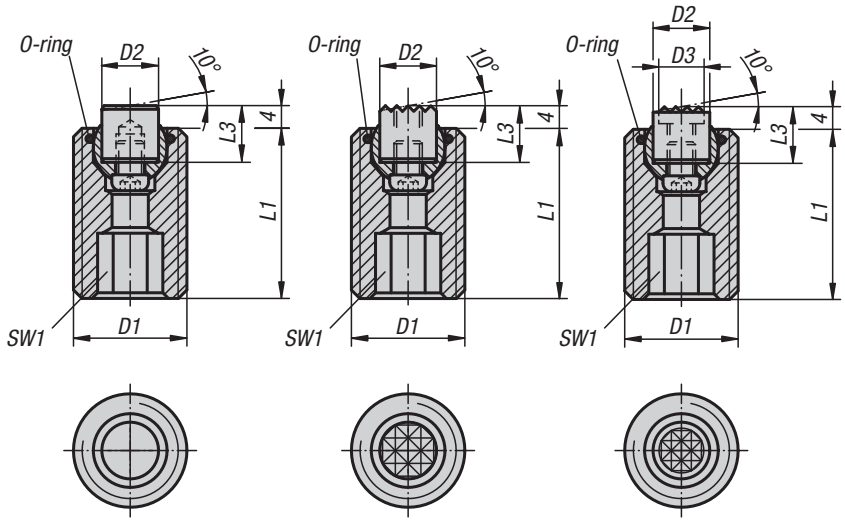


Form O
stainless steel insert
diamond impregnated

Form P
stainless steel insert,
PUR surface

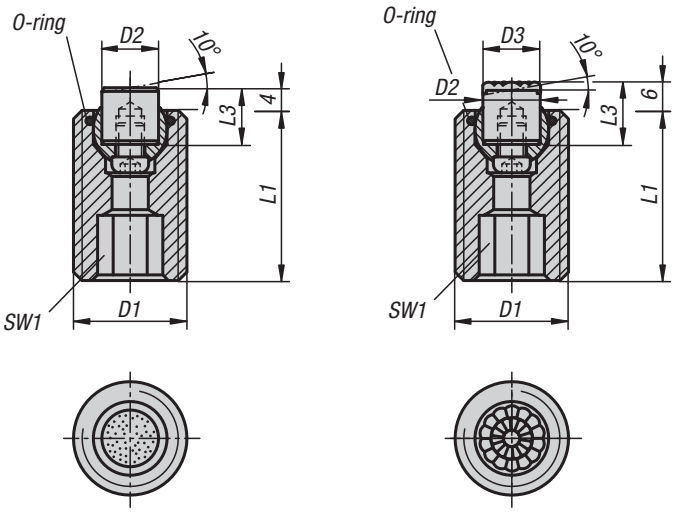


**Material:**
Body carbon steel.
Ball rust and acid resistant steel.
Inserts:
Form C, F, M tool steel
Form K POM
Form E stainless steel.
Form O stainless steel diamond impregnated.
Form P stainless steel with polyurethane surface.

**Version:**
Body tempered, black oxidised.
Ball hardened, bright.
Inserts:
Form C, F hardened, black oxidised.
Form M with carbide serrations, black oxidised.
Form K white.
Form E hardened, bright.
Form O diamond impregnated surface comparable to 100 grade abrasive grit.
Form P polyurethane surface, hardness 60° Shore.

**Sample order:**
K0291.720X070

**Note:**
Self-aligning pads are used to support and clamp unmachined and machined workpieces.
They also serve as stops, supports and thrust pads in fixtures and toolmaking.
The ball can be removed from the housing by applying light pressure to the socket head screw.

Ball secured against rotation.

**Advantages:**
Highly cost-effective as inserts can be exchanged.
The built-in O-ring holds the ball in place and keeps dirt and foreign particles out, ensuring uniform movement.

## KIPP Self-aligning pads adjustable with O-ring, exchangeable inserts and hexagon socket

| Order No. | Form | D1 | D2 | L1 | L3 | SW1 | Ball-Ø | Load rating max. kN (static load only) | Order No. steel insert |
|---|---|---|---|---|---|---|---|---|---|
| **K0291.120X030** | C | M20 | 10 | 30 | 10 | 10 | 13 | 37 | K0385.10108 |
| **K0291.120X050** | C | M20 | 10 | 50 | 10 | 10 | 13 | 37 | K0385.10108 |
| **K0291.120X070** | C | M20 | 10 | 70 | 10 | 10 | 13 | 37 | K0385.10108 |
| **K0291.124X040** | C | M24 | 12 | 40 | 10 | 10 | 15 | 55 | K0385.12108 |
| **K0291.124X080** | C | M24 | 12 | 80 | 10 | 10 | 15 | 55 | K0385.12108 |

KIRÁLY TRADING KFT H-1151 Budapest Mogyoród útja 12 - 14 tel: 061307-3801 Email:pzoli@kiralytrading.hu

# Self-aligning pads adjustable

with O-ring, exchangeable inserts and hexagon socket

| Order No. | Form | D1 | D2 | L1 | L3 | SW1 | Ball-Ø | Load rating max. kN (static load only) | Approx. weight kg | Order No. stainless steel insert |
|---|---|---|---|---|---|---|---|---|---|---|
| **K0291.220X030** | E | M20 | 10 | 30 | 10 | 10 | 13 | 37 | 0,049 | K0385.10102 |
| **K0291.220X050** | E | M20 | 10 | 50 | 10 | 10 | 13 | 37 | 0,084 | K0385.10102 |
| **K0291.220X070** | E | M20 | 10 | 70 | 10 | 10 | 13 | 37 | 0,122 | K0385.10102 |
| **K0291.224X040** | E | M24 | 12 | 40 | 10 | 10 | 15 | 55 | 0,101 | K0385.12102 |
| **K0291.224X080** | E | M24 | 12 | 80 | 10 | 10 | 15 | 55 | 0,200 | K0385.12102 |

| Order No. | Form | D1 | D2 | L1 | L3 | SW1 | Ball-Ø | Load rating max. kN (static load only) | Order No. gripper |
|---|---|---|---|---|---|---|---|---|---|
| **K0291.320X030** | F | M20 | 10 | 30 | 10 | 10 | 13 | 37 | K0385.1010 |
| **K0291.320X050** | F | M20 | 10 | 50 | 10 | 10 | 13 | 37 | K0385.1010 |
| **K0291.320X070** | F | M20 | 10 | 70 | 10 | 10 | 13 | 37 | K0385.1010 |
| **K0291.324X040** | F | M24 | 12 | 40 | 10 | 10 | 15 | 55 | K0385.1210 |
| **K0291.324X080** | F | M24 | 12 | 80 | 10 | 10 | 15 | 55 | K0385.1210 |

| Order No. | Form | D1 | D2 | L1 | L3 | SW1 | Ball-Ø | Load rating max. kN (static load only) | Order No. POM insert |
|---|---|---|---|---|---|---|---|---|---|
| **K0291.720X030** | K | M20 | 10 | 30 | 10 | 10 | 13 | 4 | K0385.10109 |
| **K0291.720X050** | K | M20 | 10 | 50 | 10 | 10 | 13 | 4 | K0385.10109 |
| **K0291.720X070** | K | M20 | 10 | 70 | 10 | 10 | 13 | 4 | K0385.10109 |
| **K0291.724X040** | K | M24 | 12 | 40 | 10 | 10 | 15 | 7 | K0385.12109 |
| **K0291.724X080** | K | M24 | 12 | 80 | 10 | 10 | 15 | 7 | K0385.12109 |

| Order No. | Form | D1 | D2 | D3 | L1 | L3 | SW1 | Ball-Ø | Load rating max. kN (static load only) | Order No. gripper |
|---|---|---|---|---|---|---|---|---|---|---|
| **K0291.920X030** | M | M20 | 10 | 7,9 | 30 | 10 | 10 | 13 | 37 | K0385.10107 |
| **K0291.920X050** | M | M20 | 10 | 7,9 | 50 | 10 | 10 | 13 | 37 | K0385.10107 |
| **K0291.920X070** | M | M20 | 10 | 7,9 | 70 | 10 | 10 | 13 | 37 | K0385.10107 |
| **K0291.924X040** | M | M24 | 12 | 9,5 | 40 | 10 | 10 | 15 | 55 | K0385.12107 |
| **K0291.924X080** | M | M24 | 12 | 9,5 | 80 | 10 | 10 | 15 | 55 | K0385.12107 |

| Order No. | Form | D1 | D2 | L1 | L3 | SW1 | Ball-Ø | Load rating max. kN (static load only) | Approx. weight kg | Order No. stainless steel insert, diamond surface |
|---|---|---|---|---|---|---|---|---|---|---|
| **K0291.520X050** | O | M20 | 10 | 50 | 10 | 10 | 13 | 37 | 0,084 | K0385.10105 |
| **K0291.520X070** | O | M20 | 10 | 70 | 10 | 10 | 13 | 37 | 0,122 | K0385.10105 |
| **K0291.524X040** | O | M24 | 12 | 40 | 10 | 10 | 15 | 55 | 0,101 | K0385.12105 |
| **K0291.520X030** | O | M20 | 10 | 30 | 10 | 10 | 13 | 37 | 0,049 | K0385.10105 |
| **K0291.524X080** | O | M24 | 12 | 80 | 10 | 10 | 15 | 55 | 0,200 | K0385.12105 |

| Order No. | Form | D1 | D2 | D3 | L1 | L3 | SW1 | Ball-Ø | Load rating max. kN (static load only) | Approx. weight kg | Order No. stainless steel insert, polyurethane surface |
|---|---|---|---|---|---|---|---|---|---|---|---|
| **K0291.620X030** | P | M20 | 10 | 10 | 30 | 12 | 10 | 13 | 37 | 0,049 | K0385.10126 |
| **K0291.620X050** | P | M20 | 10 | 10 | 50 | 12 | 10 | 13 | 37 | 0,084 | K0385.10126 |
| **K0291.620X070** | P | M20 | 10 | 10 | 70 | 12 | 10 | 13 | 37 | 0,122 | K0385.10126 |
| **K0291.624X040** | P | M24 | 12 | 13 | 40 | 12 | 10 | 15 | 55 | 0,101 | K0385.12126 |
| **K0291.624X080** | P | M24 | 12 | 13 | 80 | 12 | 10 | 15 | 55 | 0,200 | K0385.12126 |

KIRÁLY TRADING KFT H-1151 Budapest Mogyoród útja 12 - 14 tel: 061307-3801 Email:pzoli@kiralytrading.hu

# Grippers and inserts round

Form C, E, K

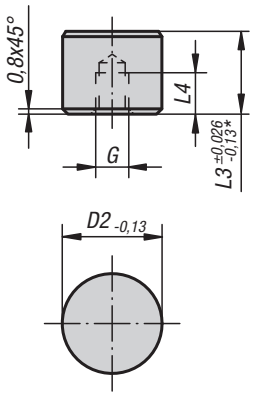


* Applies to Form K

Form O
stainless steel insert
diamond impregnated

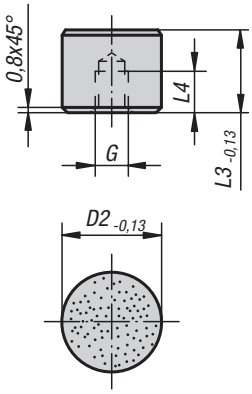


Form P
stainless steel insert,
PUR surface

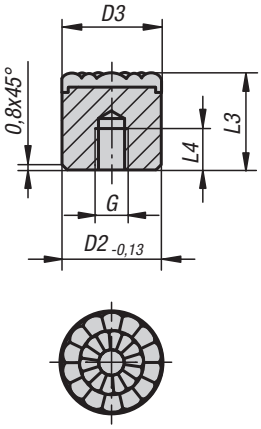


Form F
diamond grip insert

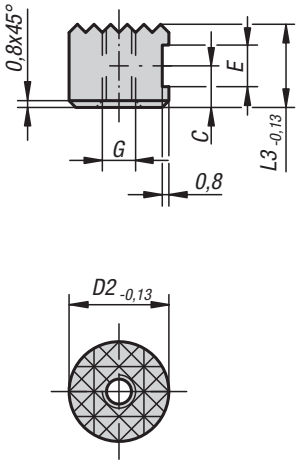


Form M
carbide steel
diamond grip

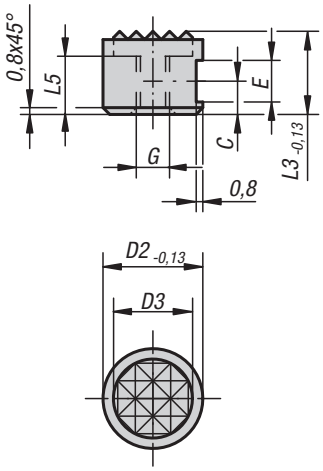


**Material:**
Form C, F, M tool steel
Form E, O, P stainless steel
Form K POM

**Version:**
Form C hardened and black oxidised.
Form E hardened, bright.
Form K white.
Form O with diamond impregnated surface comparable to 100 grade abrasive grit.
Form P with polyurethane surface, Shore hardness 60°.
Form F, hardened and black oxidised.
Form M with carbide serrations, black oxidised.

**Sample order:**
K0385.2510

**Note:**
Grippers and inserts are ideal for use in clamping arms, gripping systems, clamping fixtures, clamping jaws and self-aligning pads. The use of grippers allows the transfer of very high torque values and above average grip, even with hard materials and surface irregularities.

Form O: The abrasive diamond surface is bonded firmly to the base. It is ideally suited to supporting smooth or slippery applications with a minimum of clamping pressure. This allows the diamond particles to get a firm grip on a very small area with minimum damage to the surface.
The diamond surface offers excellent wear resistance.

Form P: The polyurethane surface is vulcanised firmly to the ball. It is abrasion-resistant and does not discolour. It offers optimum protection against damage to delicate surfaces. The pearl-like surface gives a firm grip and allows air to escape so as to prevent any suction effect between the contact surface and the self-aligning pads.

Grippers and inserts can be fitted in the following self-aligning pads:
Order No. K0285.117X022 up to K0285.936X036
Order No. K0289.110X015 up to K0289.924X100
Order No. K0291.120X030 up to K0291.924X080

KIRÁLY TRADING KFT H-1151 Budapest Mogyoród útja 12 - 14 tel: 061307-3801 Email:pzoli@kiralytrading.hu

# Grippers and inserts round

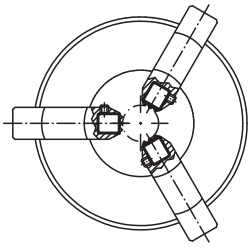

## KIPP Round inserts Form C, K, E, O

| Order No. Form C | Order No. Form E | Order No. Form K | Order No. Form O | D2 | L3 | L4 | G |
|---|---|---|---|---|---|---|---|
| K0385.10108 | K0385.10102 | K0385.10109 | K0385.10105 | 10 | 10 | 5 | M5 |
| K0385.10128 | K0385.10122 | K0385.10129 | K0385.10125 | 10 | 12 | 6,4 | M5 |
| K0385.12108 | K0385.12102 | K0385.12109 | K0385.12105 | 12 | 10 | 5 | M5 |
| K0385.12128 | K0385.12122 | K0385.12129 | K0385.12125 | 12 | 12 | 6,4 | M5 |
| K0385.16108 | K0385.16102 | K0385.16109 | K0385.16105 | 16 | 10 | 5 | M6 |
| K0385.16128 | K0385.16122 | K0385.16129 | K0385.16125 | 16 | 12 | 6,4 | M6 |
| K0385.20108 | K0385.20102 | K0385.20109 | K0385.20105 | 20 | 10 | 5 | M6 |
| K0385.20128 | K0385.20122 | K0385.20129 | K0385.20125 | 20 | 12 | 6,4 | M6 |
| K0385.25108 | K0385.25102 | K0385.25109 | K0385.25105 | 25 | 10 | 5 | M6 |
| K0385.25128 | K0385.25122 | K0385.25129 | K0385.25125 | 25 | 12 | 6,4 | M6 |

## KIPP Round inserts Form P

| Order No. | Form | D2 | D3 | L3 | L4 | G |
|---|---|---|---|---|---|---|
| K0385.08126 | Form P | 8 | 8 | 12 | 6 | M4 |
| K0385.10126 | Form P | 10 | 10 | 12 | 6 | M5 |
| K0385.12126 | Form P | 12 | 13 | 12 | 6 | M5 |
| K0385.16126 | Form P | 16 | 16 | 12 | 6 | M6 |
| K0385.20126 | Form P | 20 | 21 | 12 | 6 | M6 |
| K0385.25126 | Form P | 25 | 27 | 12 | 6 | M6 |

## KIPP Grippers Form F, M

| Order No. Form F | Order No. Form M | D2 | D3 | L3 | L5 | C | E | G |
|---|---|---|---|---|---|---|---|---|
| K0385.1010 | K0385.10107 | 10 | -/7,9 | 10 | -/6 | 4,5 | 4,75 | M5 |
| K0385.1210 | K0385.12107 | 12 | -/9,5 | 10 | -/6 | 4,5 | 4,75 | M5 |
| K0385.1212 | K0385.12127 | 12 | -/9,5 | 12 | -/7 | 6 | 4,75 | M5 |
| K0385.1610 | K0385.16107 | 16 | -/12,7 | 10 | -/6 | 4,5 | 4,75 | M6 |
| K0385.2010 | K0385.20107 | 20 | -/15,9 | 10 | -/6 | 4,5 | 4,75 | M6 |
| K0385.2510 | K0385.25107 | 25 | -/19 | 10 | -/6 | 4,5 | 4,75 | M6 |

KIRÁLY TRADING KFT H-1151 Budapest Mogyoród útja 12 - 14 tel: 061307-3801 Email:pzoli@kiralytrading.hu

# Grippers hexagonal

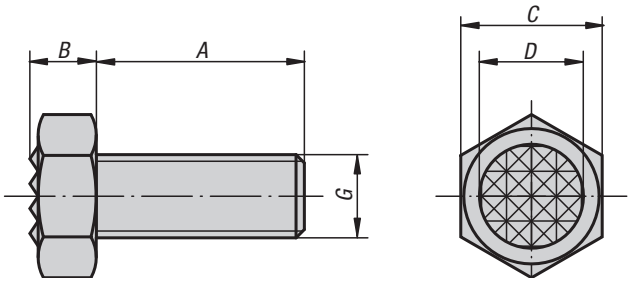


**Material:**
Hex head screw, grade 10.9.
Serrations carbide, hardness 72-74 HRC.

**Version:**
Black oxidised.

**Sample order:**
K0386.1710

**Note:**
The serrated carbide tips are soldered in.

## KIPP Grippers hexagonal

| Order No. | A | B | C | D | G | Serration |
|---|---|---|---|---|---|---|
| **K0386.1006** | 25 | 5 | 10 | 7,9 | M6 | superfine |
| **K0386.1308** | 25 | 6,4 | 13 | 9,5 | M8 | fine |
| **K0386.1710** | 25 | 8,3 | 17 | 12,7 | M10 | fine |
| **K0386.17102** | 40 | 8,3 | 17 | 12,7 | M10 | fine |
| **K0386.1912** | 25 | 8,7 | 19 | 15,9 | M12 | fine |
| **K0386.19122** | 40 | 8,7 | 19 | 15,9 | M12 | fine |
| **K0386.2416** | 35 | 11 | 24 | 19 | M16 | fine |
| **K0386.24162** | 50 | 11 | 24 | 19 | M16 | fine |
| **K0386.3020** | 40 | 13,7 | 30 | 25,4 | M20 | superfine |
| **K0386.30202** | 60 | 13,7 | 30 | 25,4 | M20 | superfine |

KIRÁLY TRADING KFT H-1151 Budapest Mogyoród útja 12 - 14 tel: 061307-3801 Email:pzoli@kiralytrading.hu

# Grippers square

Form A
tool steel

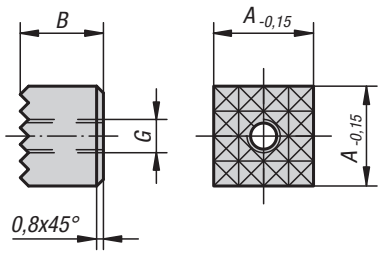


Form B
tool steel
carbide diamond grip

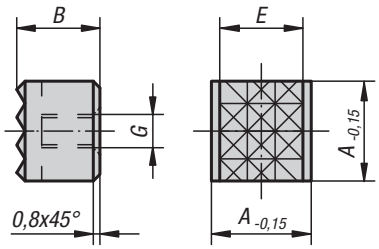


Form C
tool steel

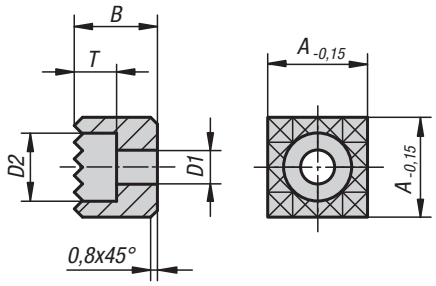


**Material:**
Tool steel hardened or carbide.

**Version:**
Black oxidised.

**Sample order:**
K0387.2506

**Note:**
Grippers and inserts are ideal for use in clamping arms, gripping systems, clamping fixtures, clamping jaws and self-aligning pads.
Grippers transfer very high torque values,even with hard materials and surface irregularities. Grippers guarantee above average holding forces at high cutting forces.
The serrated carbide tips are soldered in.

## KIPP Grippers square

| Order No. | Form | A | B | D1 | D2 | E | G | T | Serration |
|---|---|---|---|---|---|---|---|---|---|
| **K0387.101205** | A | 10 | 12 | - | - | - | M5 | - | superfine |
| **K0387.121205** | A | 12 | 12 | - | - | - | M5 | - | fine |
| **K0387.2005** | A | 20 | 10 | - | - | - | M5 | - | fine |
| **K0387.2506** | A | 25 | 10 | - | - | - | M6 | - | fine |
| **K0387.1005** | A | 10 | 10 | - | - | - | M5 | - | superfine |
| **K0387.1606** | A | 16 | 10 | - | - | - | M6 | - | fine |
| **K0387.161206** | A | 16 | 12 | - | - | - | M6 | - | fine |
| **K0387.251206** | A | 25 | 12 | - | - | - | M6 | - | fine |
| **K0387.201205** | A | 20 | 12 | - | - | - | M5 | - | fine |
| **K0387.1205** | A | 12 | 10 | - | - | - | M5 | - | fine |
| **K0387.12057** | B | 12 | 10 | - | - | 10,3 | M5 | - | fine |
| **K0387.2012058** | C | 20 | 12 | 5,5 | 10 | - | - | 6,6 | fine |
| **K0387.1210048** | C | 12 | 10 | 4,5 | 8 | - | - | 5,6 | fine |
| **K0387.1610048** | C | 16 | 10 | 4,5 | 8 | - | - | 5,6 | fine |
| **K0387.2010058** | C | 20 | 10 | 5,5 | 10 | - | - | 6,6 | fine |
| **K0387.1212048** | C | 12 | 12 | 4,5 | 8 | - | - | 5,6 | fine |
| **K0387.2510068** | C | 25 | 10 | 6,6 | 11 | - | - | 7,6 | fine |
| **K0387.2512068** | C | 25 | 12 | 6,6 | 11 | - | - | 7,6 | fine |
| **K0387.1612048** | C | 16 | 12 | 4,5 | 8 | - | - | 5,6 | fine |

KIRÁLY TRADING KFT H-1151 Budapest Mogyoród útja 12 - 14 tel: 061307-3801 Email:pzoli@kiralytrading.hu

# Grippers adjustable

Form A
tool steel

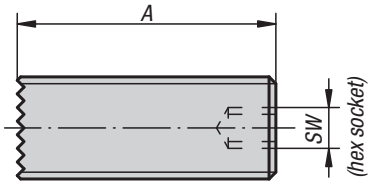


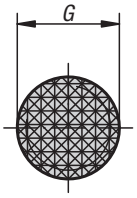

Form B
carbide diamond grip

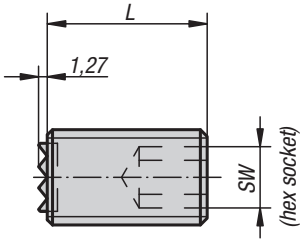


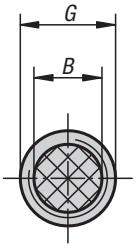


**Material:**
Hardened tool steel or carbide.

**Version:**
Black oxidised.

**Sample order:**
K0388.5012

**Note:**
The full thread on the grippers allows exact adjustment to the clamping application.
The carbide tips are soldered in.

Form C
4-point carbide insert

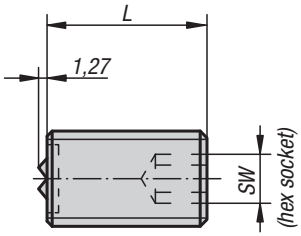


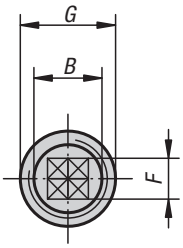

## KIPP Grippers adjustable

| Order No. | Form | A | L | B | G | F | SW |
|---|---|---|---|---|---|---|---|
| **K0388.4010** | A | 40 | - | - | M10 | - | 3 |
| **K0388.4012** | A | 40 | - | - | M12 | - | 5 |
| **K0388.4016** | A | 40 | - | - | M16 | - | 6 |
| **K0388.4020** | A | 40 | - | - | M20 | - | 8 |
| **K0388.2510** | B | - | 25 | 6,4 | M10 | - | 5 |
| **K0388.5010** | B | - | 50 | 6,4 | M10 | - | 5 |
| **K0388.2512** | B | - | 25 | 7,9 | M12 | - | 6 |
| **K0388.5012** | B | - | 50 | 7,9 | M12 | - | 6 |
| **K0388.2516** | B | - | 25 | 11,2 | M16 | - | 8 |
| **K0388.5016** | B | - | 50 | 11,2 | M16 | - | 8 |
| **K0388.2520** | B | - | 25 | 12,7 | M20 | - | 10 |
| **K0388.5020** | B | - | 50 | 12,7 | M20 | - | 10 |
| **K0388.25124** | C | - | 25 | 7,9 | M12 | 6,5 | 6 |
| **K0388.50124** | C | - | 50 | 7,9 | M12 | 6,5 | 6 |
| **K0388.25164** | C | - | 25 | 11,2 | M16 | 8 | 8 |
| **K0388.50164** | C | - | 50 | 11,2 | M16 | 8 | 8 |
| **K0388.25204** | C | - | 25 | 12,7 | M20 | 8 | 10 |
| **K0388.50204** | C | - | 50 | 12,7 | M20 | 8 | 10 |

KIRÁLY TRADING KFT H-1151 Budapest Mogyoród útja 12 - 14 tel: 061307-3801 Email:pzoli@kiralytrading.hu

# Rest pads

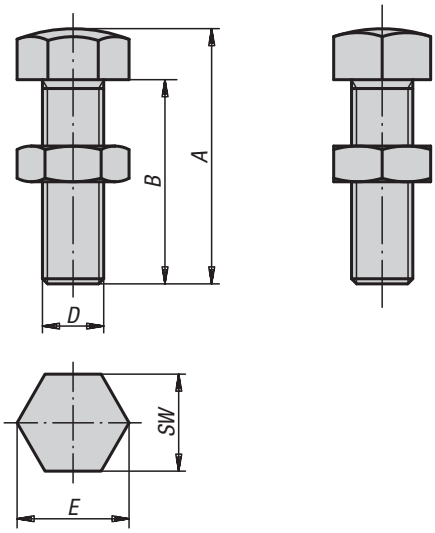


**Material:**
Carbon steel.

**Version:**
Tempered and black oxidised.

**Sample order:**
K0307.16055

## KIPP Rest pads

| Order No. | Material | A | B | D | E | SW |
|---|---|---|---|---|---|---|
| **K0307.06030** | tempered steel | 30 | 25 | M6 | 11,5 | 10 |
| **K0307.06040** | tempered steel | 40 | 35 | M6 | 11,5 | 10 |
| **K0307.06050** | tempered steel | 50 | 45 | M6 | 11,5 | 10 |
| **K0307.08036** | tempered steel | 36 | 30 | M8 | 15 | 13 |
| **K0307.08046** | tempered steel | 46 | 40 | M8 | 15 | 13 |
| **K0307.08056** | tempered steel | 56 | 50 | M8 | 15 | 13 |
| **K0307.10042** | tempered steel | 42 | 35 | M10 | 19,6 | 17 |
| **K0307.10048** | tempered steel | 48 | 40 | M10 | 19,6 | 17 |
| **K0307.10058** | tempered steel | 58 | 50 | M10 | 19,6 | 17 |
| **K0307.10068** | tempered steel | 68 | 60 | M10 | 19,6 | 17 |
| **K0307.12048** | tempered steel | 50 | 42 | M12 | 21,9 | 19 |
| **K0307.12070** | tempered steel | 70 | 60 | M12 | 21,9 | 19 |
| **K0307.12080** | tempered steel | 80 | 70 | M12 | 21,9 | 19 |
| **K0307.16055** | tempered steel | 55 | 45 | M16 | 27,7 | 24 |
| **K0307.16075** | tempered steel | 75 | 65 | M16 | 27,7 | 24 |
| **K0307.16085** | tempered steel | 85 | 75 | M16 | 27,7 | 24 |
| **K0307.12148** | brass | 50 | 42 | M12 | 21,9 | 19 |
| **K0307.16155** | brass | 55 | 45 | M16 | 27,7 | 24 |

KIRÁLY TRADING KFT H-1151 Budapest Mogyoród útja 12 - 14 tel: 061307-3801 Email:pzoli@kiralytrading.hu

# Extension pieces

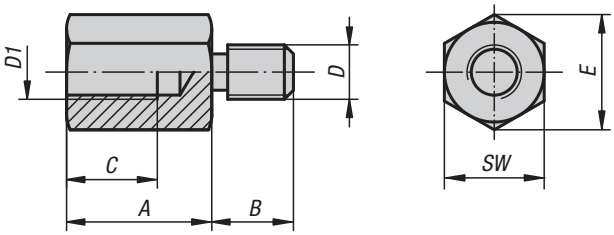


**Material:**
Carbon steel.

**Version:**
Black oxidised.

**Sample order:**
K0821.120750

**Note:**
Extension pieces are used to extend self-aligning pads, spring plungers, positioning feet, rest pads etc.

## KIPP Extension pieces

| Order No. | A | B | C | D | D1 | E | SW |
|---|---|---|---|---|---|---|---|
| K0821.08025 | 25 | 13 | 15 | M8 | M8 | 15 | 13 |
| K0821.08032 | 32 | 13 | 15 | M8 | M8 | 15 | 13 |
| K0821.08040 | 40 | 13 | 15 | M8 | M8 | 15 | 13 |
| K0821.10025 | 25 | 15 | 17 | M10 | M10 | 19,6 | 17 |
| K0821.10032 | 32 | 15 | 17 | M10 | M10 | 19,6 | 17 |
| K0821.10040 | 40 | 15 | 17 | M10 | M10 | 19,6 | 17 |
| K0821.10050 | 50 | 16 | 20 | M10 | M10 | 19,6 | 17 |
| K0821.10075 | 75 | 16 | 20 | M10 | M10 | 19,6 | 17 |
| K0821.120320 | 32 | 18 | 20 | M12 | M12 | 25,4 | 22 |
| K0821.120500 | 50 | 18 | 20 | M12 | M12 | 25,4 | 22 |
| K0821.120750 | 75 | 18 | 20 | M12 | M12 | 25,4 | 22 |
| K0821.160320 | 32 | 25 | 20 | M16 | M16 | 31,2 | 27 |
| K0821.160500 | 50 | 25 | 30 | M16 | M16 | 31,2 | 27 |
| K0821.160750 | 75 | 25 | 30 | M16 | M16 | 31,2 | 27 |
| K0821.108025 | 25 | 19 | 15 | M8 | M8 | 15 | 13 |
| K0821.108032 | 32 | 19 | 15 | M8 | M8 | 15 | 13 |
| K0821.108040 | 40 | 19 | 15 | M8 | M8 | 15 | 13 |
| K0821.112032 | 32 | 30 | 20 | M12 | M12 | 25,4 | 22 |
| K0821.112050 | 50 | 30 | 20 | M12 | M12 | 25,4 | 22 |
| K0821.112075 | 75 | 30 | 20 | M12 | M12 | 25,4 | 22 |
| K0821.116032 | 32 | 30 | 20 | M16 | M16 | 31,2 | 27 |
| K0821.116050 | 50 | 30 | 30 | M16 | M16 | 31,2 | 27 |
| K0821.116075 | 75 | 30 | 30 | M16 | M16 | 31,2 | 27 |

# K0822

# Eccentric supports

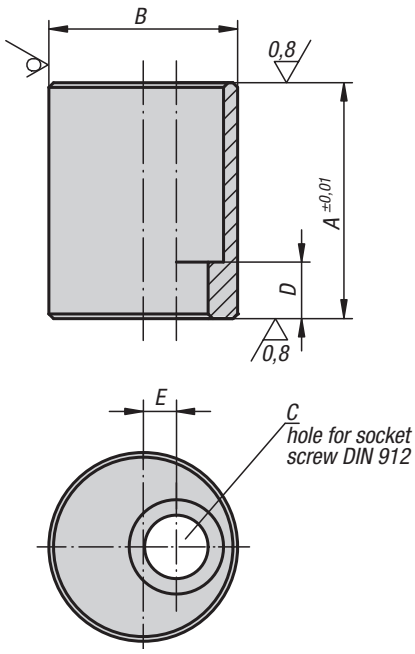

**Material:**
Special steel alloy.

**Version:**
Tempered, black oxidised.
Contact faces ground.

**Sample order:**
K0822.10040

## KIPP Eccentric supports

| Order No. | A | B | C thru hole for | D | E |
|---|---|---|---|---|---|
| K0822.08016 | 16 | 25 | M8 | 7 | 3,5 |
| K0822.08020 | 20 | 25 | M8 | 7 | 3,5 |
| K0822.08025 | 25 | 25 | M8 | 7 | 3,5 |
| K0822.08032 | 32 | 25 | M8 | 7 | 3,5 |
| K0822.08040 | 40 | 25 | M8 | 7 | 3,5 |
| K0822.08050 | 50 | 25 | M8 | 7 | 3,5 |
| K0822.10020 | 20 | 32 | M10 | 9 | 5 |
| K0822.10025 | 25 | 32 | M10 | 9 | 5 |
| K0822.10032 | 32 | 32 | M10 | 9 | 5 |
| K0822.10040 | 40 | 32 | M10 | 9 | 5 |
| K0822.10050 | 50 | 32 | M10 | 9 | 5 |
| K0822.10063 | 63 | 32 | M10 | 9 | 5 |
| K0822.12020 | 20 | 40 | M12 | 7 | 7 |
| K0822.12025 | 25 | 40 | M12 | 12 | 7 |
| K0822.12032 | 32 | 40 | M12 | 12 | 7 |
| K0822.12040 | 40 | 40 | M12 | 12 | 7 |
| K0822.12050 | 50 | 40 | M12 | 12 | 7 |
| K0822.12063 | 63 | 40 | M12 | 12 | 7 |
| K0822.12080 | 80 | 40 | M12 | 22 | 7 |
| K0822.12100 | 100 | 40 | M12 | 22 | 7 |
| K0822.12125 | 125 | 40 | M12 | 22 | 7 |
| K0822.16025 | 25 | 50 | M16 | 8 | 10 |
| K0822.16032 | 32 | 50 | M16 | 15 | 10 |
| K0822.16040 | 40 | 50 | M16 | 15 | 10 |
| K0822.16050 | 50 | 50 | M16 | 15 | 10 |
| K0822.16063 | 63 | 50 | M16 | 15 | 10 |
| K0822.16080 | 80 | 50 | M16 | 35 | 10 |
| K0822.16100 | 100 | 50 | M16 | 35 | 10 |
| K0822.16125 | 125 | 50 | M16 | 35 | 10 |

KIRÁLY TRADING KFT H-1151 Budapest Mogyoród útja 12 - 14 tel: 061307-3801 Email:pzoli@kiralytrading.hu

# Supports

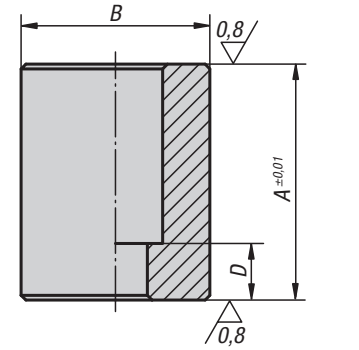


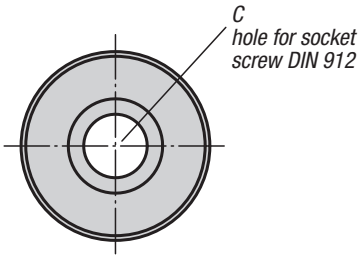

**Material:**
Carbon steel.

**Version:**
Tempered, black oxidised.
Contact faces ground.

**Sample order:**
K0823.08016

## KIPP Supports

| Order No. | A | B | C thru hole for | D | Approx. weight kg |
|---|---|---|---|---|---|
| **K0823.08016** | 16 | 25 | M8 | 7 | 0,043 |
| **K0823.08020** | 20 | 25 | M8 | 7 | 0,05 |
| **K0823.08025** | 25 | 25 | M8 | 7 | 0,07 |
| **K0823.08032** | 32 | 25 | M8 | 7 | 0,085 |
| **K0823.08040** | 40 | 25 | M8 | 7 | 0,105 |
| **K0823.08050** | 50 | 25 | M8 | 7 | 0,135 |
| **K0823.10020** | 20 | 32 | M10 | 9 | 0,092 |
| **K0823.10025** | 25 | 32 | M10 | 9 | 0,115 |
| **K0823.10032** | 32 | 32 | M10 | 9 | 0,15 |
| **K0823.10040** | 40 | 32 | M10 | 9 | 0,185 |
| **K0823.10050** | 50 | 32 | M10 | 9 | 0,23 |
| **K0823.10063** | 63 | 32 | M10 | 9 | 0,285 |
| **K0823.12020** | 20 | 40 | M12 | 7 | 0,155 |
| **K0823.12025** | 25 | 40 | M12 | 12 | 0,2 |
| **K0823.12032** | 32 | 40 | M12 | 12 | 0,255 |
| **K0823.12040** | 40 | 40 | M12 | 12 | 0,315 |
| **K0823.12050** | 50 | 40 | M12 | 12 | 0,39 |
| **K0823.12063** | 63 | 40 | M12 | 12 | 0,49 |
| **K0823.12080** | 80 | 40 | M12 | 22 | 0,62 |
| **K0823.12100** | 100 | 40 | M12 | 22 | 0,765 |
| **K0823.16025** | 25 | 50 | M16 | 8 | 0,3 |
| **K0823.16032** | 32 | 50 | M16 | 15 | 0,395 |
| **K0823.16040** | 40 | 50 | M16 | 15 | 0,485 |
| **K0823.16050** | 50 | 50 | M16 | 15 | 0,57 |
| **K0823.16063** | 63 | 50 | M16 | 15 | 0,735 |
| **K0823.16080** | 80 | 50 | M16 | 35 | 0,97 |
| **K0823.16100** | 100 | 50 | M16 | 35 | 1,195 |
| **K0823.16125** | 125 | 50 | M16 | 35 | 1,43 |

KIRÁLY TRADING KFT H-1151 Budapest Mogyoród útja 12 - 14 tel: 061307-3801 Email:pzoli@kiralytrading.hu

# Seating blocks adjustable

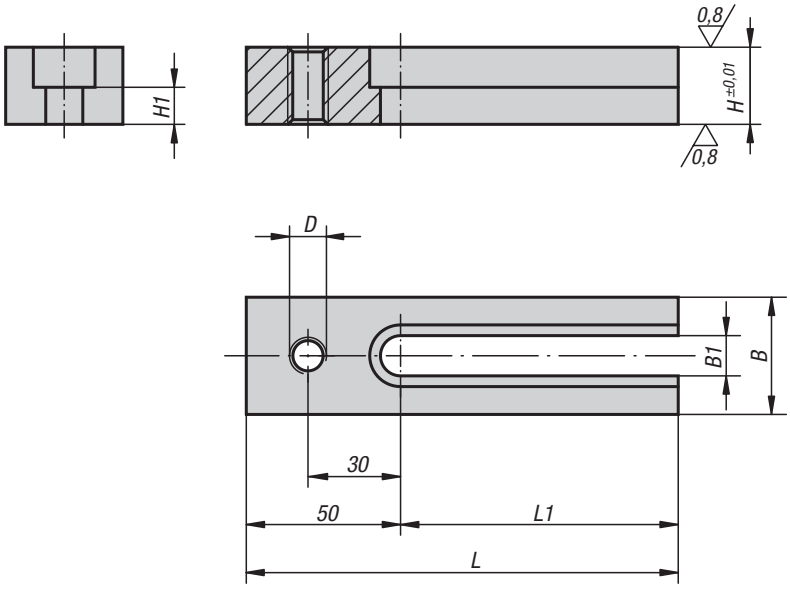


**Material:**
Carbon steel.

**Version:**
Tempered, black oxidised.
Contact faces ground.

**Sample order:**
K0824.12125

**Note:**
The tapped hole is for mounting fixture components.
The slot allows the riser to be set in any desired position.

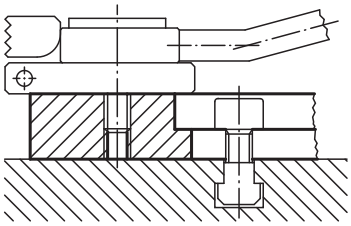

## KIPP Seating blocks adjustable

| Order No. | D | L | L1 | B | B1 | H | H1 |
|---|---|---|---|---|---|---|---|
| **K0824.12025** | M12 | 90 | 40 | 38 | 13 | 25 | 12 |
| **K0824.12032** | M12 | 90 | 40 | 38 | 13 | 32 | 19 |
| **K0824.12040** | M12 | 90 | 40 | 38 | 13 | 40 | 27 |
| **K0824.12050** | M12 | 90 | 40 | 38 | 13 | 50 | 37 |
| **K0824.12125** | M12 | 140 | 90 | 38 | 13 | 25 | 12 |
| **K0824.12132** | M12 | 140 | 90 | 38 | 13 | 32 | 19 |
| **K0824.12140** | M12 | 140 | 90 | 38 | 13 | 40 | 27 |
| **K0824.12150** | M12 | 140 | 90 | 38 | 13 | 50 | 37 |
| **K0824.16032** | M16 | 90 | 40 | 50 | 17 | 32 | 15 |
| **K0824.16040** | M16 | 90 | 40 | 50 | 17 | 40 | 23 |
| **K0824.16050** | M16 | 90 | 40 | 50 | 17 | 50 | 33 |
| **K0824.16132** | M16 | 140 | 90 | 50 | 17 | 32 | 15 |
| **K0824.16140** | M16 | 140 | 90 | 50 | 17 | 40 | 23 |
| **K0824.16150** | M16 | 140 | 90 | 50 | 17 | 50 | 33 |

KIRÁLY TRADING KFT H-1151 Budapest Mogyoród útja 12 - 14 tel: 061307-3801 Email:pzoli@kiralytrading.hu

# Adjustable supports

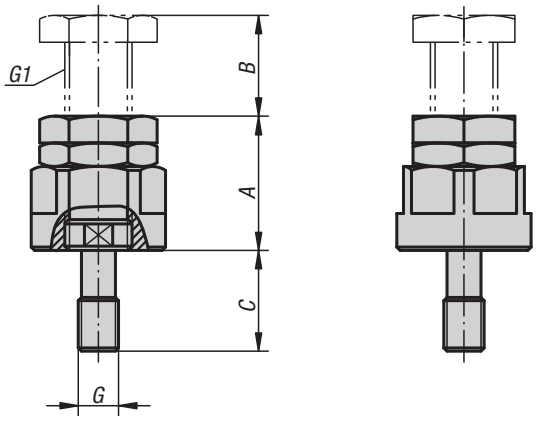


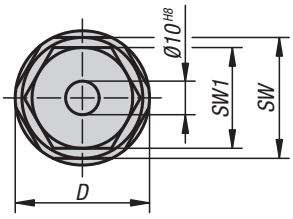


**Material:**
Carbon steel.

**Version:**
Black oxidised.
Adjustment spindle tempered.

**Sample order:**
K0825.16100

**Note:**
Inserts K0826 can be mounted in the top to suit the application.

## KIPP Adjustable supports

| Order No. | A min. | B max. | C | D | SW | SW1 | G | G1 |
|---|---|---|---|---|---|---|---|---|
| **K0825.12040** | 40 | 10 | 30 | 40 | 36 | 30 | M12 | M20x1,5 |
| **K0825.12050** | 50 | 20 | 30 | 40 | 36 | 30 | M12 | M20x1,5 |
| **K0825.12070** | 70 | 40 | 30 | 40 | 36 | 30 | M12 | M20x1,5 |
| **K0825.12100** | 100 | 50 | 30 | 50 | 46 | 36 | M12 | M24x2 |
| **K0825.12150** | 150 | 100 | 30 | 50 | 46 | 36 | M12 | M24x2 |
| **K0825.16040** | 40 | 10 | 30 | 40 | 36 | 30 | M16 | M20x1,5 |
| **K0825.16050** | 50 | 20 | 30 | 40 | 36 | 30 | M16 | M20x1,5 |
| **K0825.16070** | 70 | 40 | 30 | 40 | 36 | 30 | M16 | M20x1,5 |
| **K0825.16100** | 100 | 50 | 30 | 50 | 46 | 36 | M16 | M24x2 |
| **K0825.16150** | 150 | 100 | 30 | 50 | 46 | 36 | M16 | M24x2 |

# K0826

## Inserts

rounded insert

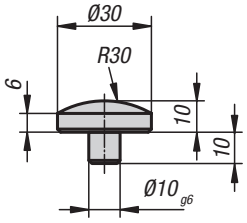


cone insert

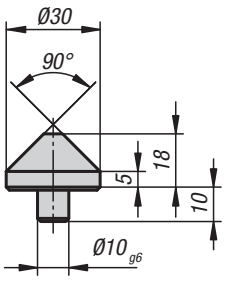


prism insert

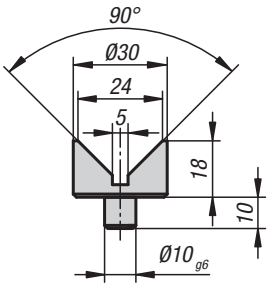


**Material:**
Carbon steel.

**Version:**
Tempered to 1100-1200 N/mm², black oxidised.

**Sample order:**
K0826.02

### KIPP Inserts

| Order No. | Version |
|---|---|
| **K0826.01** | rounded insert |
| **K0826.02** | cone insert |
| **K0826.03** | prism insert |

KIRÁLY TRADING KFT H-1151 Budapest Mogyoród útja 12 - 14 tel: 061307-3801 Email:pzoli@kiralytrading.hu

# Support blocks

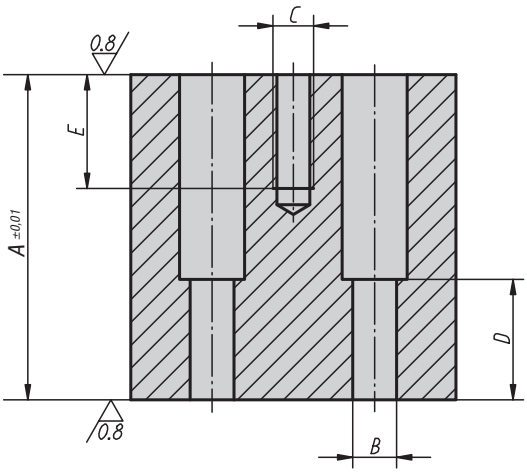


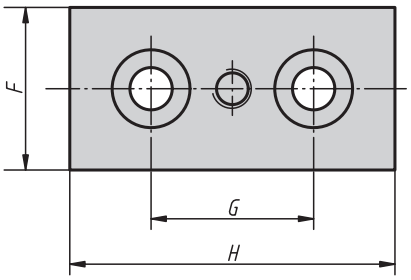


**Material:**
Carbon steel.

**Version:**
Tempered, black oxidised.
Contact faces ground.

**Sample order:**
K0827.36012020

**Note:**
Support blocks are for placing under long workpieces to prevent bending during machining or clamping. The tapped hole is for mounting fixture elements between the grid holes.

## KIPP Support blocks

| Order No. | A | B Hole for | C | D | E | F | G | H | Approx. weight kg |
|---|---|---|---|---|---|---|---|---|---|
| **K0827.36012020** | 20 | M12 | M12 | 7 | 20 | 50 | 50 | 100 | 0,67 |
| **K0827.36012025** | 25 | M12 | M12 | 12 | 25 | 50 | 50 | 100 | 0,849 |
| **K0827.36012032** | 32 | M12 | M12 | 19 | 32 | 50 | 50 | 100 | 1,124 |
| **K0827.36012040** | 40 | M12 | M12 | 27 | 40 | 50 | 50 | 100 | 1,38 |
| **K0827.36012050** | 50 | M12 | M12 | 37 | 35 | 50 | 50 | 100 | 1,727 |
| **K0827.36012063** | 63 | M12 | M12 | 37 | 35 | 50 | 50 | 100 | 2,205 |
| **K0827.36012080** | 80 | M12 | M12 | 37 | 35 | 50 | 50 | 100 | 2,715 |
| **K0827.36012100** | 100 | M12 | M12 | 37 | 35 | 50 | 50 | 100 | 3,361 |
| **K0827.36012125** | 125 | M12 | M12 | 37 | 35 | 50 | 50 | 100 | 4,207 |
| **K0827.36016025** | 25 | M16 | M16 | 8 | 25 | 50 | 50 | 100 | 0,748 |
| **K0827.36016032** | 32 | M16 | M16 | 15 | 32 | 50 | 50 | 100 | 1 |
| **K0827.36016040** | 40 | M16 | M16 | 23 | 40 | 50 | 50 | 100 | 1,248 |
| **K0827.36016050** | 50 | M16 | M16 | 33 | 35 | 50 | 50 | 100 | 1,584 |
| **K0827.36016063** | 63 | M16 | M16 | 46 | 35 | 50 | 50 | 100 | 2,035 |
| **K0827.36016080** | 80 | M16 | M16 | 46 | 35 | 50 | 50 | 100 | 2,525 |
| **K0827.36016100** | 100 | M16 | M16 | 46 | 35 | 50 | 50 | 100 | 3,16 |

KIRÁLY TRADING KFT H-1151 Budapest Mogyoród útja 12 - 14 tel: 061307-3801 Email:pzoli@kiralytrading.hu

# Support bolts

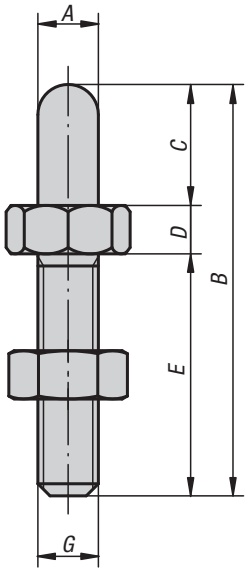


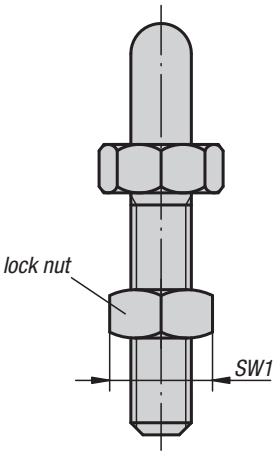


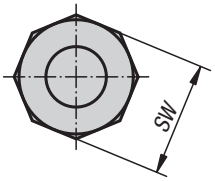


**Material:**
Carbon steel, tempered.

**Version:**
Black oxidised.

**Sample order:**
K0297.16016

**Note:**
The rounded nose also allows support bolts to be used as positioning elements for workpieces with matching holes.

The version K0297.08016 has a hex collar.

## KIPP Support bolts

| Order No. | A | B | C | D | E | G | SW | SW1 |
|---|---|---|---|---|---|---|---|---|
| **K0297.06006** | 6 | 37 | 6 | 6 | 25 | M6 | 13 | 10 |
| **K0297.06012** | 6 | 43 | 12 | 6 | 25 | M6 | 13 | 10 |
| **K0297.08008** | 8 | 45 | 8 | 7 | 30 | M8 | 13 | 13 |
| **K0297.08016** | 8 | 53 | 16 | 7 | 30 | M8 | 13 | 13 |
| **K0297.10010** | 10 | 58 | 10 | 8 | 40 | M10 | 17 | 17 |
| **K0297.10020** | 10 | 68 | 20 | 8 | 40 | M10 | 17 | 17 |
| **K0297.12012** | 12 | 72 | 12 | 10 | 50 | M12 | 19 | 19 |
| **K0297.12024** | 12 | 84 | 24 | 10 | 50 | M12 | 19 | 19 |
| **K0297.16016** | 16 | 89 | 16 | 13 | 60 | M16 | 24 | 24 |
| **K0297.16032** | 16 | 105 | 32 | 13 | 60 | M16 | 24 | 24 |
| **K0297.20020** | 20 | 115 | 20 | 15 | 80 | M20 | 36 | 30 |
| **K0297.20040** | 20 | 135 | 40 | 15 | 80 | M20 | 36 | 30 |

KIRÁLY TRADING KFT H-1151 Budapest Mogyoród útja 12 - 14 tel: 061307-3801 Email:pzoli@kiralytrading.hu

# Support bolts

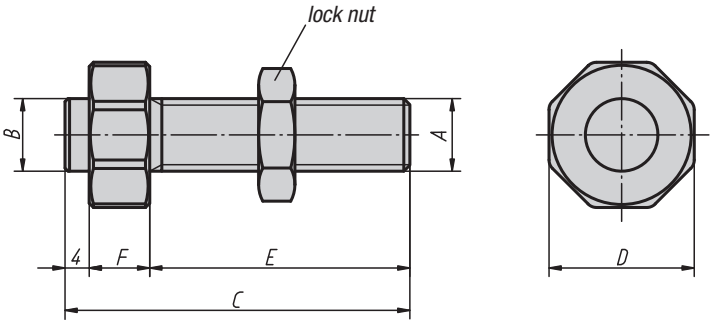


**Material:**
Carbon steel.

**Version:**
Tempered and black oxidised.

**Sample order:**
K0828.08041

## KIPP Support bolts

| Order No. | A | B | C | D | E | F | Approx. weight kg |
|---|---|---|---|---|---|---|---|
| **K0828.08041** | M8 | 8 | 41 | 17 | 30 | 7 | 0,027 |
| **K0828.08051** | M8 | 8 | 51 | 17 | 40 | 7 | 0,029 |
| **K0828.12057** | M12 | 12 | 57 | 24 | 43 | 10 | 0,08 |
| **K0828.12072** | M12 | 12 | 72 | 24 | 58 | 10 | 0,091 |
| **K0828.16057** | M16 | 16 | 57 | 30 | 43 | 10 | 0,142 |
| **K0828.16072** | M16 | 16 | 72 | 30 | 58 | 10 | 0,16 |

KIRÁLY TRADING KFT H-1151 Budapest Mogyoród útja 12 - 14 tel: 061307-3801 Email:pzoli@kiralytrading.hu

# Grub screws with thrust pad

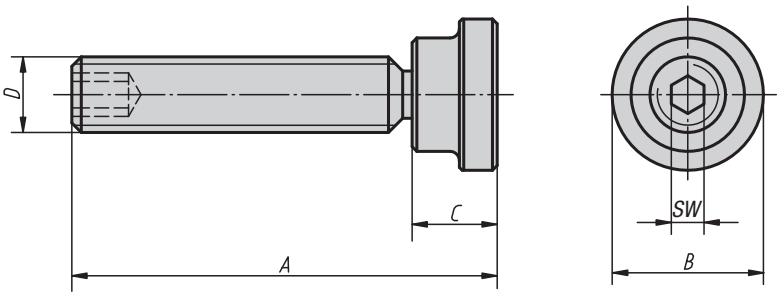


**Material, version:**
Thrust pad: carbon steel, tempered, black oxidised.
Grub screw: carbon steel, tempered.

**Sample order:**
K0829.08X43

## KIPP Grub screws with thrust pad

| Order No. | A | B | C | D | SW | Approx. weight kg |
|---|---|---|---|---|---|---|
| **K0829.08X43** | 43 | 16 | 9 | M8 | 4 | 0,022 |
| **K0829.08X63** | 63 | 16 | 9 | M8 | 4 | 0,028 |
| **K0829.10X64** | 64 | 20 | 11 | M10 | 5 | 0,045 |
| **K0829.10X84** | 84 | 20 | 11 | M10 | 5 | 0,055 |
| **K0829.12X65** | 65 | 25 | 13 | M12 | 6 | 0,07 |
| **K0829.12X85** | 85 | 25 | 13 | M12 | 6 | 0,09 |
| **K0829.12X105** | 105 | 25 | 13 | M12 | 6 | 0,1 |
| **K0829.16X85** | 85 | 32 | 15 | M16 | 8 | 0,154 |
| **K0829.16X105** | 105 | 32 | 15 | M16 | 8 | 0,18 |
| **K0829.16X130** | 130 | 32 | 15 | M16 | 8 | 0,215 |
| **K0829.20X105** | 105 | 40 | 16 | M20 | 10 | 0,295 |
| **K0829.20X130** | 130 | 40 | 16 | M20 | 10 | 0,342 |
| **K0829.20X155** | 155 | 40 | 16 | M20 | 10 | 0,395 |

# K0830

# Side clamps

K0830.212
Side stop

K0830.112
Side clamp

view A-A

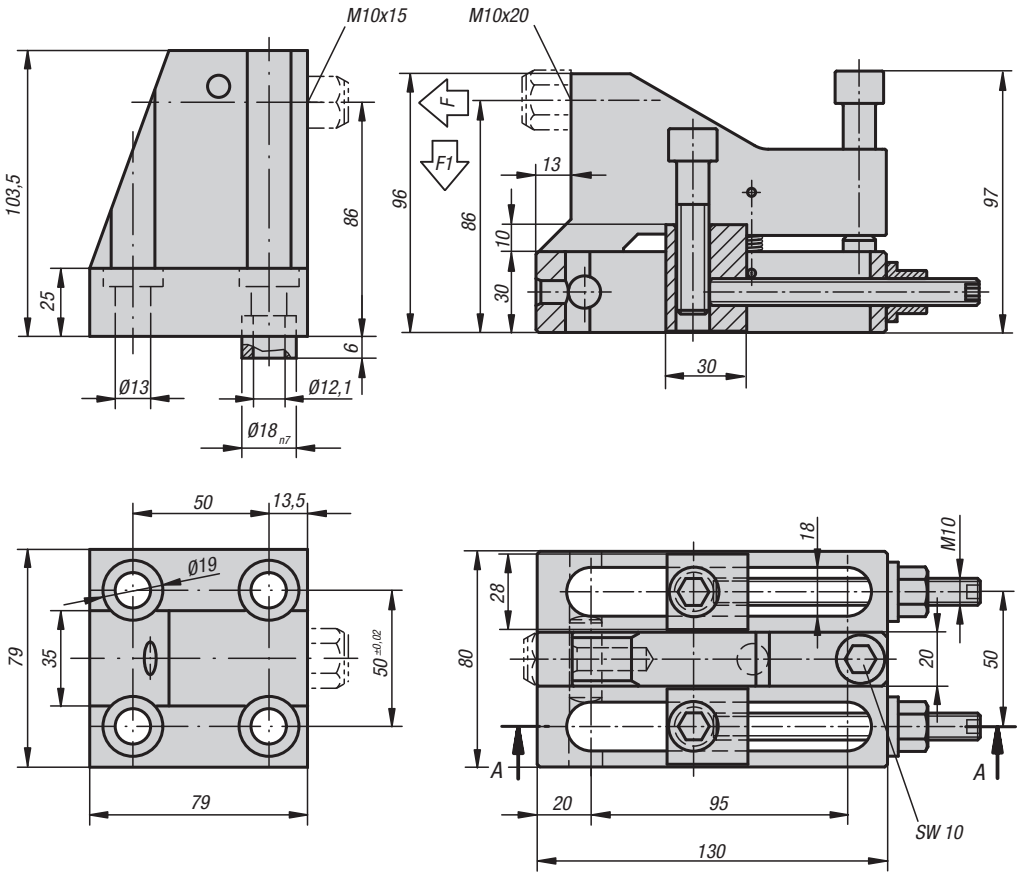


**Material:**
Body steel 1.1191.

**Version:**
Black oxidised.
Centring bush hardened.

**Sample order:**
K0830.112
(self-aligning pad not supplied)

**Note:**
The unit comprises of an adjustable side clamp and a side stop and are used to clamp workpieces with a simultaneous positive down force. The side clamp has two DIN 913 grub screws which can be set to prevent backward slippage during clamping.

## KIPP Side clamps

| Order No. | F<br>kN | F1<br>kN |
|---|---|---|
| **K0830.112** | 25 | 5 |
| **K0830.212** | 22,5 | 4,5 |

KIRÁLY TRADING KFT H-1151 Budapest Mogyoród útja 12 - 14 tel: 061307-3801 Email:pzoli@kiralytrading.hu

# K0831

## Side clamps

Form A

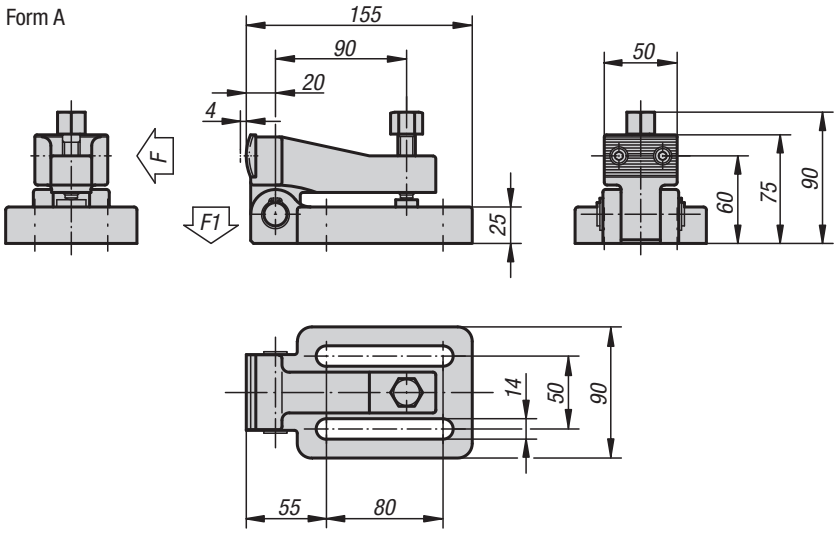


**Material:**
Body ductile iron (SG iron).
Jaw hardened carbon steel.

**Version:**
Painted black.
Jaw bright.

**Sample order:**
K0831.03

**Note:**
The workpiece is clamped between side clamps and the side stops, simultaneously producing a positive down force.
Side clamps and stops are secured with DIN 912 cylinder screws. A secure clamping is ensured when side clamps and side stops are used together.

Form B

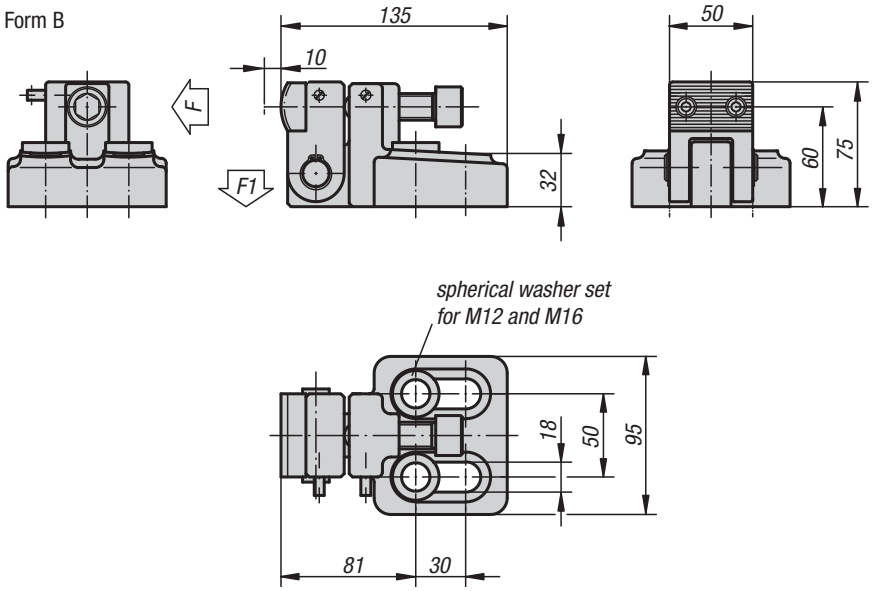


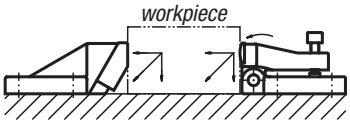


### KIPP Side clamps

| Order No. | Form | F kN | F1 kN | Tightening torque Nm |
|---|---|---|---|---|
| **K0831.01** | A | 29 | 1,3 | 38 |
| **K0831.03** | B | 58 | 2,4 | 150 |

KIRÁLY TRADING KFT H-1151 Budapest Mogyoród útja 12 - 14 tel: 061307-3801 Email:pzoli@kiralytrading.hu

# Side stops

Form A

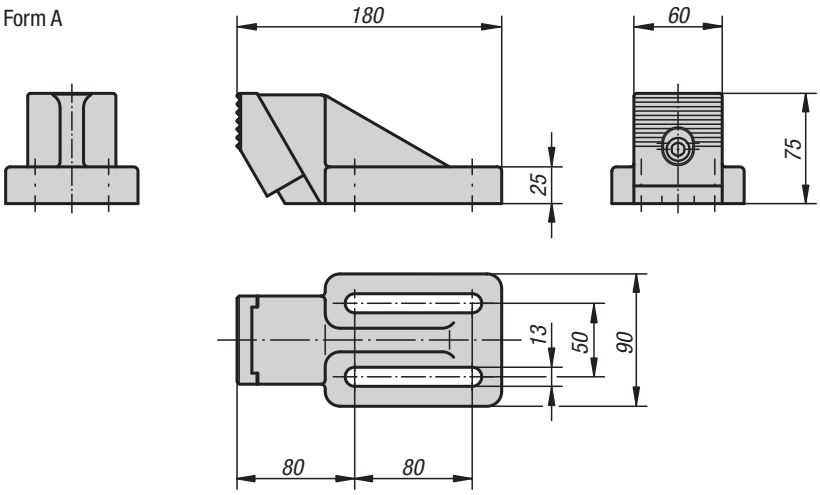


**Material:**
Body ductile iron (SG iron).
Jaw hardened carbon steel.

**Version:**
Painted black.
Jaw bright.

**Sample order:**
K0832.01

**Note:**
The workpiece is clamped between side clamps and the side stops, simultaneously producing a positive down force.
Side clamps and stops are secured with DIN 912 cylinder screws. A secure clamping is ensured when side clamps and side stops are used together.

Form B

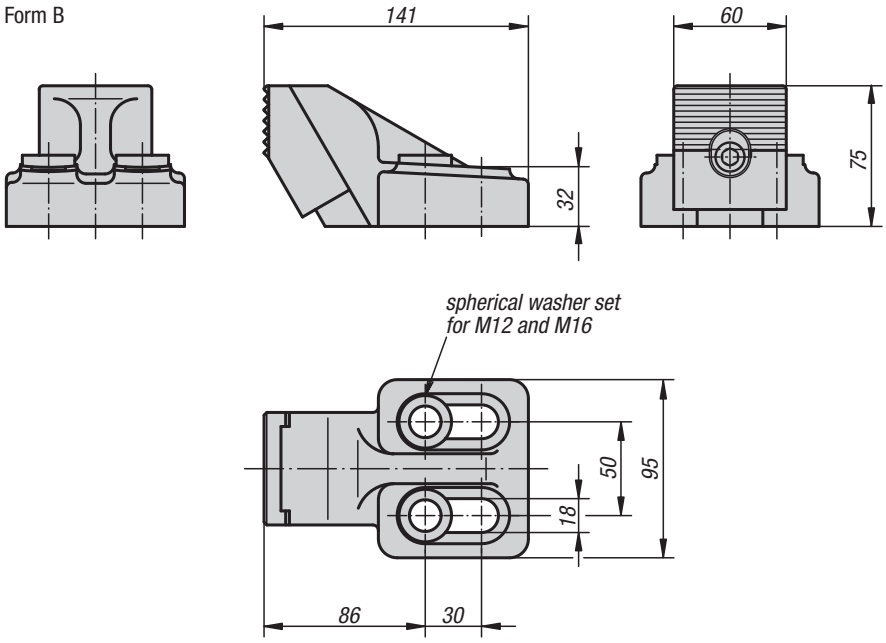


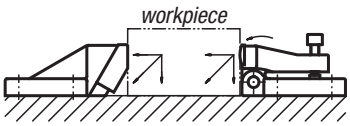


## KIPP Side stops

| Order No. | Form |
|---|---|
| K0832.01 | A |
| K0832.02 | B |

# K0891

# Robust side clamps

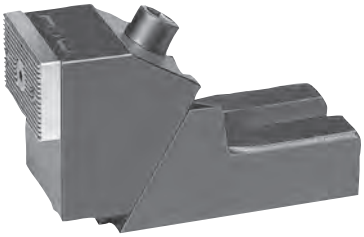

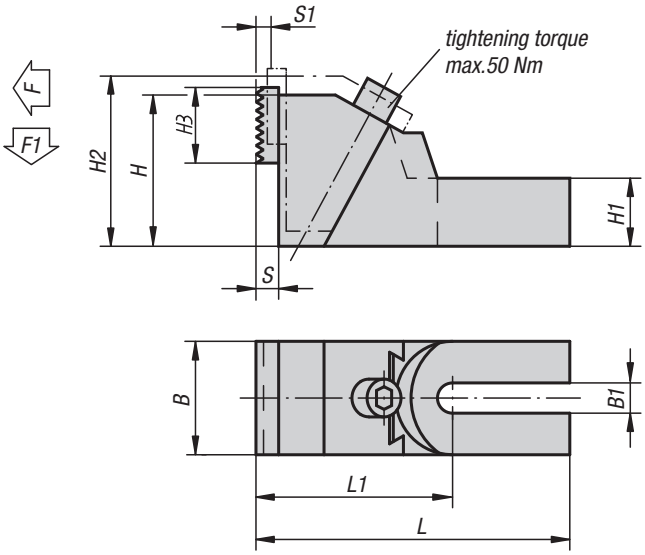


**Material:**
Body malleable iron.
Jaws mild steel.

**Version:**
Black oxidised.
Jaws case-hardened.

**Sample order:**
K0891.26

**Note:**
The jaws are reversible, smooth side for machined parts, serrated side for rough surfaces. We recommend using two bolts to mount the clamp to the machine table!

application example:

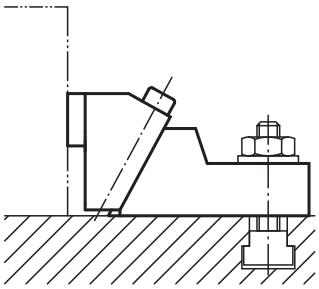

## KIPP Robust side clamps

| Order No. | suitable for slot width | L | L1 | B | B1 | H | H1 | H2 | H3 | S | S1 | F kN | F1 kN |
|---|---|---|---|---|---|---|---|---|---|---|---|---|---|
| **K0891.19** | 12, 14, 16, 18 | 177,5 | 112,5 | 65 | 19 | 85 | 37 | 99 | 40 | 12 | 8 | 18,8 | 2,26 |
| **K0891.26** | 20, 22, 24, 28, 30 | 226,5 | 136,5 | 75 | 26 | 100 | 45 | 118 | 40 | 12 | 11 | 23,05 | 2,77 |
| **K0891.38** | 32, 36, 42 | 262,5 | 157,5 | 90 | 38 | 120 | 55 | 145 | 40 | 12 | 15 | 29,4 | 3,33 |

KIRÁLY TRADING KFT H-1151 Budapest Mogyoród útja 12 - 14 tel: 061307-3801 Email:pzoli@kiralytrading.hu

# Clamping units pin-end strap

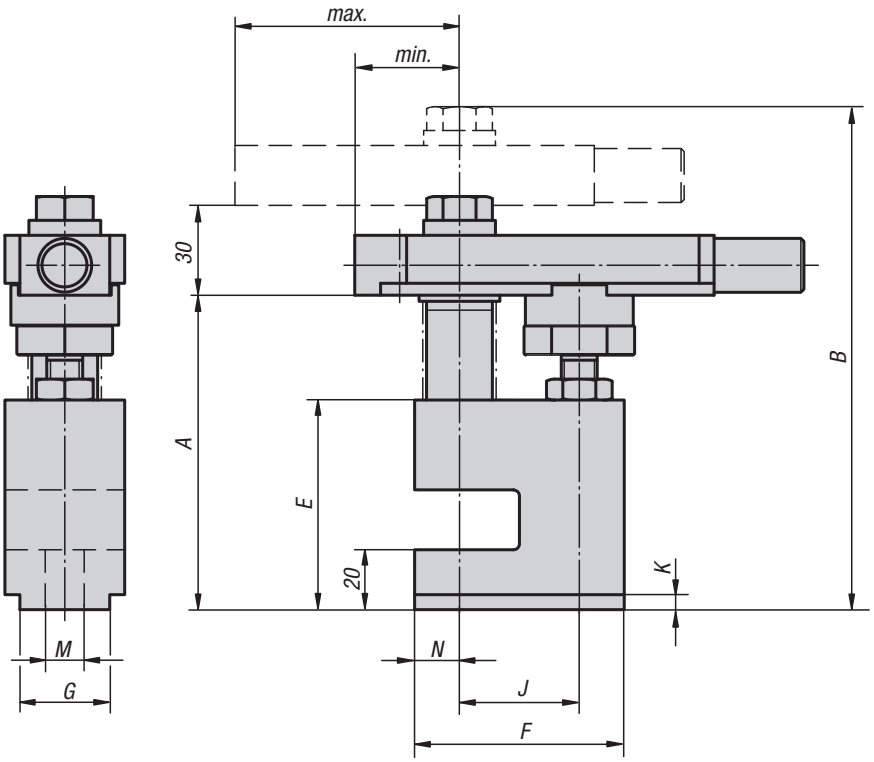


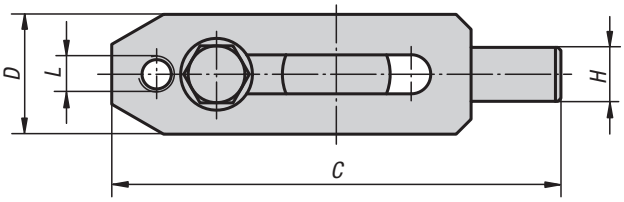


**Material, version:**
Body carbon steel, black oxidised.
Strap carbon steel, tempered and black oxidised.
Clamping screw carbon steel, tempered and black oxidised.

**Sample order:**
K0833.12105

**Note:**
Both ends of the strap can be used for clamping workpieces. The clamps can be combined with other fixture elements, such as K0839, K0821, K0307.

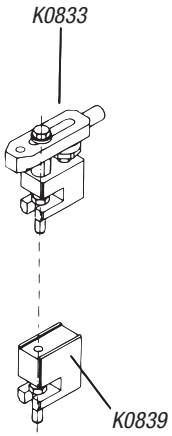


## KIPP Clamping units, pin-end strap

| Order No. | A | B | C | D | E | F | G | H | J | K | L | M | N | min. | max. | Approx. weight kg |
|---|---|---|---|---|---|---|---|---|---|---|---|---|---|---|---|---|
| **K0833.12105** | 105 | 168 | 150 | 40 | 70 | 70 | 30 | 18 | 40 | 5 | M12 | 13 | 15 | 35 | 75 | 2,1 |
| **K0833.16110** | 110 | 188 | 190 | 50 | 75 | 90 | 40 | 24 | 50 | 5 | M16 | 17 | 20 | 45 | 95 | 3,975 |

KIRÁLY TRADING KFT H-1151 Budapest Mogyoród útja 12 - 14 tel: 061307-3801 Email:pzoli@kiralytrading.hu

# Clamp straps

pin-end

K0834.08063
K0834.08075

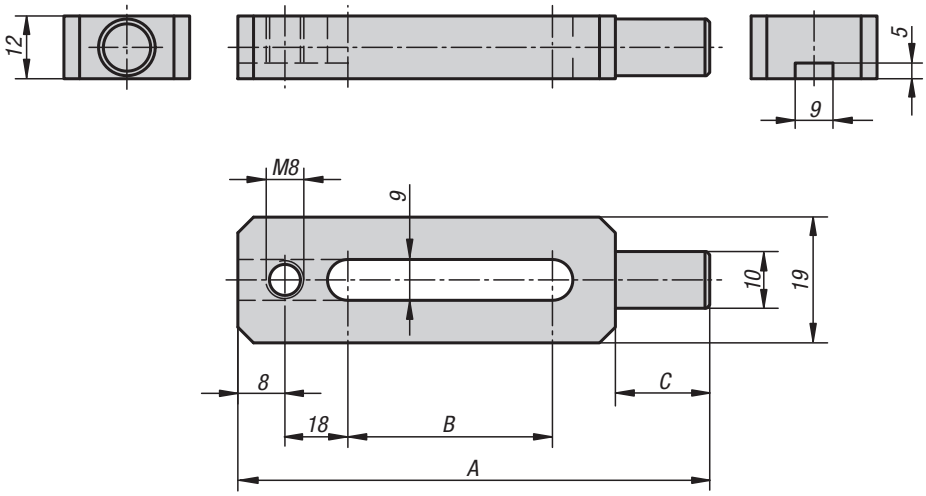


**Material:**
Carbon steel.

**Version:**
Tempered and black oxidised.

**Sample order:**
K0834.08063

**Note:**
Pin-end straps can be used in conjunction with other fixture elements, such as K0839, K0821, K0307.

K0834.12150
K0834.16190

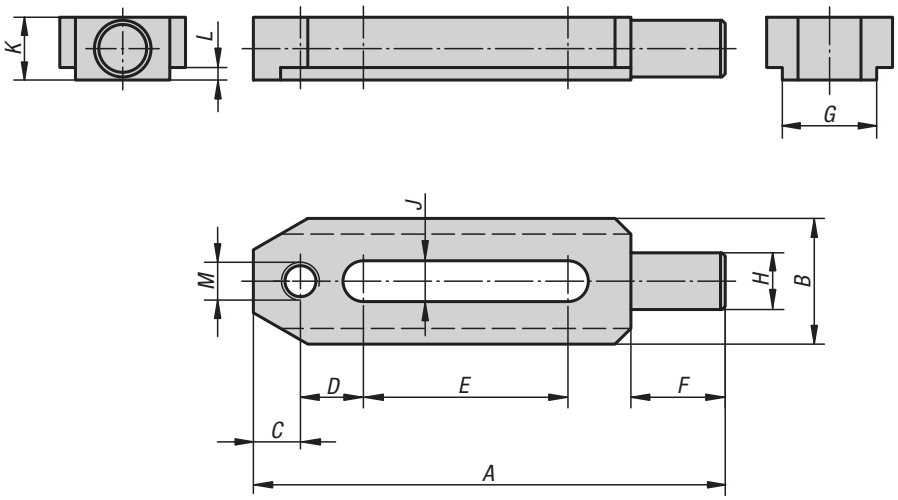


## KIPP Pin-end straps

| Order No. | A | B | C | Approx. weight kg |
|---|---|---|---|---|
| **K0834.08063** | 63 | 15 | 14 | 0,065 |
| **K0834.08075** | 75 | 20 | 20 | 0,075 |

## KIPP Pin-end straps

| Order No. | A | B | C | D | E | F | G | H | J | K | L | M | Approx. weight kg |
|---|---|---|---|---|---|---|---|---|---|---|---|---|---|
| **K0834.12150** | 150 | 40 | 15 | 20 | 65 | 30 | 30 | 18 | 13 | 20 | 4 | M12 | 0,57 |
| **K0834.16190** | 190 | 50 | 20 | 25 | 80 | 36 | 40 | 24 | 18 | 28 | 5 | M16 | 1,268 |

# K0002

# Clamp straps

goose-neck

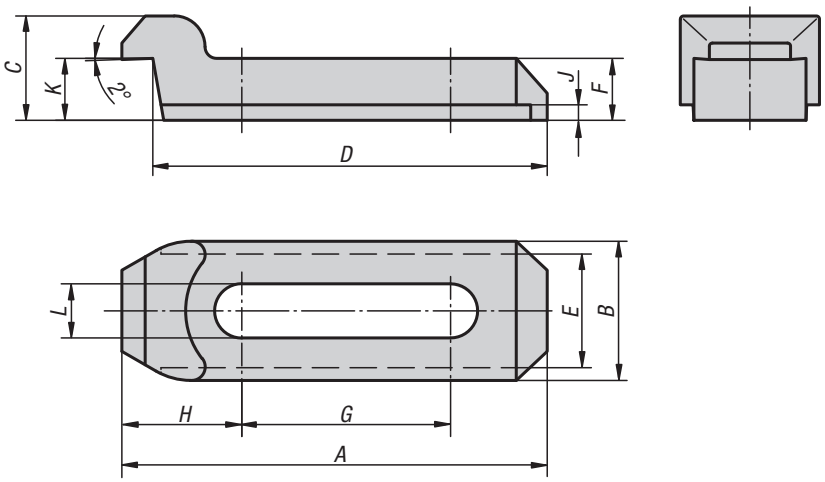


**Material:**
Carbon steel 1.7225

**Version:**
Tempered to 1000 N/mm², black oxidised.

**Sample order:**
K0002.10

## KIPP Clamp straps goose-neck

| Order No. | A | B | C | D | E | F | G | H | J | K | L | Approx. weight kg |
|---|---|---|---|---|---|---|---|---|---|---|---|---|
| **K0002.10** | 110 | 36 | 27 | 102 | 29 | 16 | 54 | 31 | 4 | 15 | 13 | 0,355 |
| **K0002.16** | 165 | 50 | 50 | 145 | 40 | 25 | 70 | 60 | 5 | 24,5 | 18 | 1,22 |

KIRÁLY TRADING KFT H-1151 Budapest Mogyoród útja 12 - 14 tel: 061307-3801 Email:pzoli@kiralytrading.hu

# Clamp straps

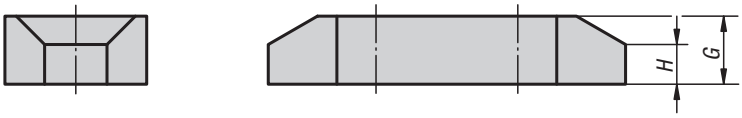


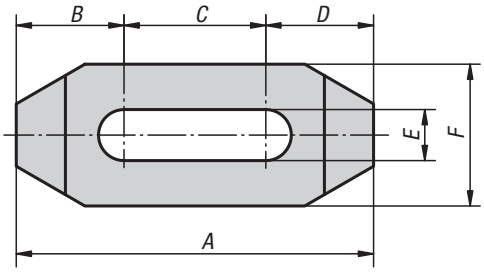


**Material:**
Carbon steel.

**Version:**
Tempered and black oxidised.

**Sample order:**
K0835.08063

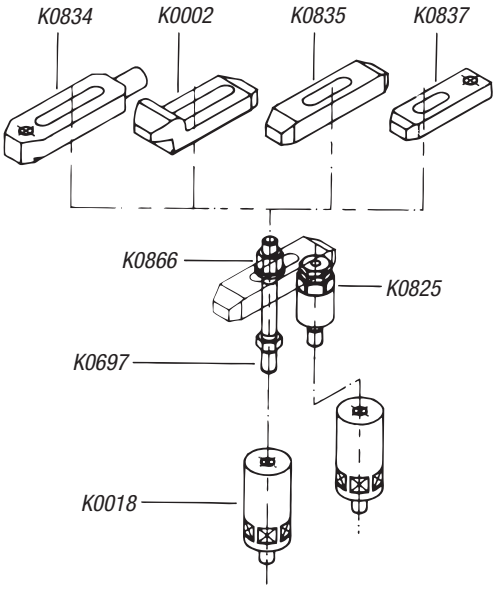


## KIPP Clamp straps

| Order No. | A | B | C | D | E | F | G | H |
|---|---|---|---|---|---|---|---|---|
| **K0835.08063** | 63 | 19 | 25 | 19 | 9 | 25 | 12 | 7 |
| **K0835.08080** | 80 | 24 | 32 | 24 | 9 | 25 | 12 | 7 |
| **K0835.08100** | 100 | 30 | 40 | 30 | 9 | 25 | 16 | 10 |
| **K0835.10063** | 63 | 19 | 25 | 19 | 11 | 25 | 12 | 7 |
| **K0835.10080** | 80 | 24 | 32 | 24 | 11 | 25 | 16 | 10 |
| **K0835.10100** | 100 | 30 | 40 | 30 | 11 | 25 | 16 | 10 |
| **K0835.10125** | 125 | 40 | 45 | 40 | 11 | 32 | 19 | 13 |
| **K0835.10160** | 160 | 55 | 50 | 55 | 11 | 32 | 19 | 13 |
| **K0835.12063** | 63 | 19 | 25 | 19 | 13 | 32 | 16 | 10 |
| **K0835.12080** | 80 | 24 | 32 | 24 | 13 | 32 | 16 | 10 |
| **K0835.12100** | 100 | 30 | 40 | 30 | 13 | 32 | 19 | 13 |
| **K0835.12125** | 125 | 40 | 45 | 40 | 13 | 32 | 19 | 13 |
| **K0835.12160** | 160 | 55 | 50 | 55 | 13 | 32 | 25 | 15 |
| **K0835.16080** | 80 | 27,5 | 25 | 27,5 | 17 | 32 | 16 | 10 |
| **K0835.16100** | 100 | 34 | 32 | 34 | 17 | 38 | 19 | 13 |
| **K0835.16125** | 125 | 42,5 | 40 | 42,5 | 17 | 38 | 19 | 13 |
| **K0835.16160** | 160 | 55 | 50 | 55 | 17 | 38 | 25 | 15 |
| **K0835.20100** | 100 | 34 | 32 | 34 | 21 | 38 | 19 | 13 |
| **K0835.20125** | 125 | 42,5 | 40 | 42,5 | 21 | 38 | 25 | 15 |
| **K0835.20160** | 160 | 55 | 50 | 55 | 21 | 38 | 25 | 15 |
| **K0835.20200** | 200 | 68,5 | 63 | 68,5 | 21 | 50 | 25 | 15 |

KIRÁLY TRADING KFT H-1151 Budapest Mogyoród útja 12 - 14 tel: 061307-3801 Email:pzoli@kiralytrading.hu

# Clamp straps

tapped both ends

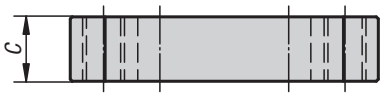


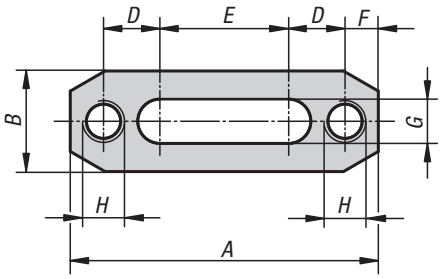


**Material:**
Carbon steel 1.0503

**Version:**
Tempered and black oxidised.

**Sample order:**
K0836.08063

## KIPP Clamp straps, tapped both ends

| Order No. | A | B | C | D | E | F | G | H | Clamping force N | Tightening torque max. Nm | Approx. weight kg |
|---|---|---|---|---|---|---|---|---|---|---|---|
| **K0836.08063** | 63 | 25 | 12 | 12 | 25 | 7 | 9 | M8 | 6900 | 22 | 0,095 |
| **K0836.08080** | 80 | 25 | 12 | 17 | 32 | 7 | 9 | M8 | 6900 | 22 | 0,13 |
| **K0836.10080** | 80 | 25 | 16 | 14 | 32 | 10 | 11 | M10 | 11300 | 45 | 0,15 |
| **K0836.10100** | 100 | 25 | 16 | 20 | 40 | 10 | 11 | M10 | 11300 | 45 | 0,2 |
| **K0836.10125** | 125 | 25 | 16 | 30 | 45 | 10 | 11 | M10 | 11300 | 45 | 0,275 |
| **K0836.12100** | 100 | 32 | 19 | 20 | 40 | 10 | 13 | M12 | 16700 | 80 | 0,32 |
| **K0836.12125** | 125 | 32 | 19 | 30 | 45 | 10 | 13 | M12 | 16700 | 80 | 0,425 |
| **K0836.12160** | 160 | 32 | 22 | 45 | 50 | 10 | 13 | M12 | 16700 | 80 | 0,675 |
| **K0836.16125** | 125 | 38 | 19 | 30,5 | 40 | 12 | 17 | M16 | 18000 | 115 | 0,48 |
| **K0836.16160** | 160 | 38 | 22 | 43 | 50 | 12 | 17 | M16 | 18000 | 115 | 0,76 |
| **K0836.16200** | 200 | 38 | 25 | 58 | 60 | 12 | 17 | M16 | 20200 | 129 | 1,125 |
| **K0836.20125** | 125 | 38 | 22 | 27,5 | 40 | 15 | 21 | M20 | 19700 | 157 | 0,47 |
| **K0836.20160** | 160 | 38 | 22 | 40 | 50 | 15 | 21 | M20 | 19700 | 157 | 0,665 |
| **K0836.20200** | 200 | 50 | 25 | 55 | 60 | 15 | 21 | M20 | 22900 | 183 | 1,445 |

# K0837

# Clamp straps

tapped heel

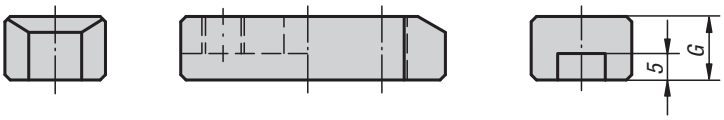


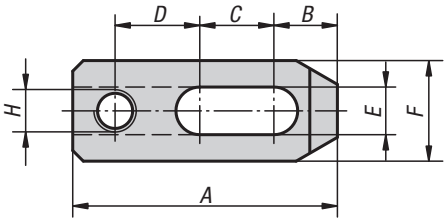


**Material:**
Carbon steel.

**Version:**
Tempered and black oxidised.

**Sample order:**
K0837.08040

## KIPP Clamp straps, tapped heel

| Order No. | A | B | C | D | E | F | G | H |
|---|---|---|---|---|---|---|---|---|
| **K0837.08040** | 40 | 10 | 6 | 16 | 9 | 19 | 12 | M8 |
| **K0837.08050** | 50 | 12 | 14 | 16 | 9 | 19 | 12 | M8 |
| **K0837.08063** | 63 | 12 | 27 | 16 | 9 | 19 | 12 | M8 |
| **K0837.10050** | 50 | 12 | 8 | 20 | 11 | 25 | 12 | M10 |
| **K0837.10063** | 63 | 15 | 18 | 20 | 11 | 25 | 12 | M10 |
| **K0837.10080** | 80 | 15 | 32 | 23 | 11 | 25 | 16 | M10 |
| **K0837.10100** | 100 | 15 | 40 | 35 | 11 | 25 | 16 | M10 |
| **K0837.10125** | 125 | 15 | 50 | 50 | 11 | 25 | 16 | M10 |
| **K0837.12063** | 63 | 14 | 14 | 24 | 13 | 32 | 16 | M12 |
| **K0837.12080** | 80 | 20 | 25 | 24 | 13 | 32 | 16 | M12 |
| **K0837.12100** | 100 | 20 | 40 | 29 | 13 | 32 | 19 | M12 |
| **K0837.12125** | 125 | 20 | 50 | 44 | 13 | 32 | 19 | M12 |
| **K0837.12160** | 160 | 20 | 60 | 69 | 13 | 32 | 19 | M12 |
| **K0837.16080** | 80 | 18 | 17 | 30 | 17 | 38 | 19 | M16 |
| **K0837.16100** | 100 | 25 | 30 | 30 | 17 | 38 | 25 | M16 |
| **K0837.16125** | 125 | 25 | 45 | 40 | 17 | 38 | 25 | M16 |
| **K0837.16160** | 160 | 25 | 65 | 55 | 17 | 38 | 25 | M16 |
| **K0837.20160** | 160 | 32 | 60 | 52 | 21 | 50 | 25 | M20 |
| **K0837.20200** | 200 | 32 | 80 | 72 | 21 | 50 | 25 | M20 |

KIRÁLY TRADING KFT H-1151 Budapest Mogyoród útja 12 - 14 tel: 061307-3801 Email:pzoli@kiralytrading.hu

# Clamp straps

tapped heel

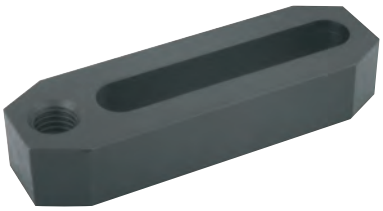

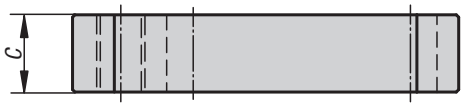


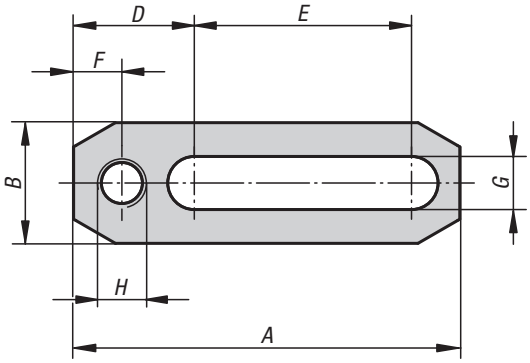


**Material:**
Carbon steel 1.0503

**Version:**
Tempered and black oxidised.

**Sample order:**
K0838.08063

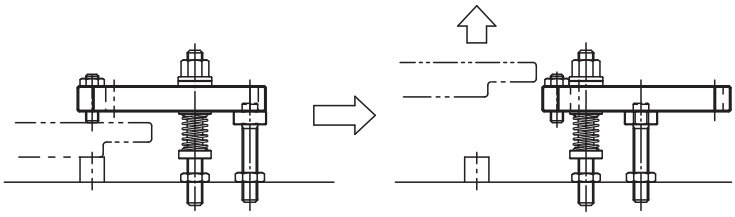

## KIPP Clamp straps, tapped heel

| Order No. | A | B | C | D | E | F | G | H | Clamping force N | Tightening torque max. Nm | Approx. weight kg |
|---|---|---|---|---|---|---|---|---|---|---|---|
| **K0838.08063** | 63 | 19 | 12 | 19 | 36 | 7 | 9 | M8 | 3200-8000 | 17 | 0,065 |
| **K0838.08080** | 80 | 19 | 12 | 19 | 53 | 7 | 9 | M8 | 3500-8600 | 17 | 0,080 |
| **K0838.10080** | 80 | 25 | 16 | 25 | 45 | 10 | 11 | M10 | 6800-16900 | 45 | 0,160 |
| **K0838.10100** | 100 | 25 | 16 | 25 | 65 | 10 | 11 | M10 | 7300-18300 | 45 | 0,190 |
| **K0838.10125** | 125 | 25 | 16 | 25 | 90 | 10 | 11 | M10 | 7700-19300 | 45 | 0,235 |
| **K0838.12100** | 100 | 32 | 19 | 28 | 60 | 10 | 13 | M12 | 10200-25600 | 80 | 0,300 |
| **K0838.12125** | 125 | 32 | 19 | 28 | 85 | 10 | 13 | M12 | 11000-27500 | 80 | 0,370 |
| **K0838.12160** | 160 | 32 | 19 | 28 | 120 | 10 | 13 | M12 | 11600-29000 | 80 | 0,470 |
| **K0838.16125** | 125 | 38 | 25 | 36 | 73 | 12 | 17 | M16 | 12100-30300 | 129 | 0,580 |
| **K0838.16160** | 160 | 38 | 25 | 36 | 108 | 12 | 17 | M16 | 13200-33000 | 129 | 0,720 |
| **K0838.16200** | 200 | 38 | 25 | 36 | 148 | 12 | 17 | M16 | 13900-34700 | 129 | 0,890 |
| **K0838.20160** | 160 | 50 | 25 | 45 | 90 | 15 | 21 | M20 | 15000-36000 | 183 | 1,020 |
| **K0838.20200** | 200 | 50 | 32 | 45 | 130 | 15 | 21 | M20 | 16000-37000 | 183 | 1,600 |
| **K0838.20250** | 250 | 50 | 32 | 45 | 180 | 15 | 21 | M20 | 17000-38000 | 183 | 1,960 |

KIRÁLY TRADING KFT H-1151 Budapest Mogyoród útja 12 - 14 tel: 061307-3801 Email:pzoli@kiralytrading.hu

# Riser blocks

Form P

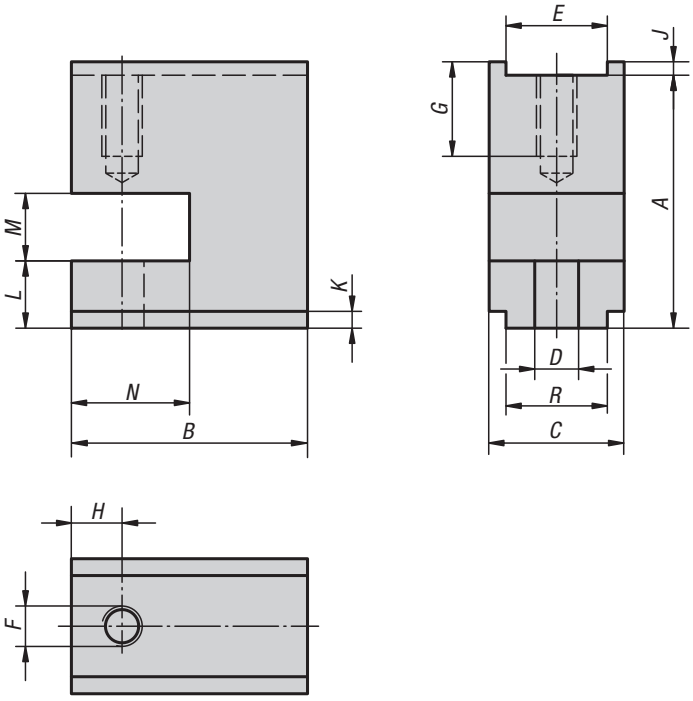


**Material:**
Carbon steel.

**Version:**
Black oxidised.

**Sample order:**
K0839.12075

**Note:**
These riser blocks Form P are used together with clamping straps to clamp high workpieces.

## KIPP Riser blocks Form P

| Order No. | A | B | C | D | E | F | G | H | J | K | L | M | N | R | Approx. weight kg |
|---|---|---|---|---|---|---|---|---|---|---|---|---|---|---|---|
| **K0839.12075** | 75 | 70 | 40 | 13 | 30 | M12 | 24 | 15 | 4 | 5 | 20 | 20 | 35 | 30 | 1,355 |
| **K0839.12100** | 100 | 70 | 40 | 13 | 30 | M12 | 24 | 15 | 3 | 5 | 20 | 20 | 35 | 30 | 1,89 |
| **K0839.16075** | 75 | 90 | 50 | 17 | 40 | M16 | 30 | 20 | 4 | 5 | 20 | 20 | 45 | 40 | 2,1 |
| **K0839.16100** | 100 | 90 | 50 | 17 | 40 | M16 | 30 | 20 | 3 | 5 | 20 | 20 | 45 | 40 | 2,935 |

KIRÁLY TRADING KFT H-1151 Budapest Mogyoród útja 12 - 14 tel: 061307-3801 Email:pzoli@kiralytrading.hu

# Compact clamps

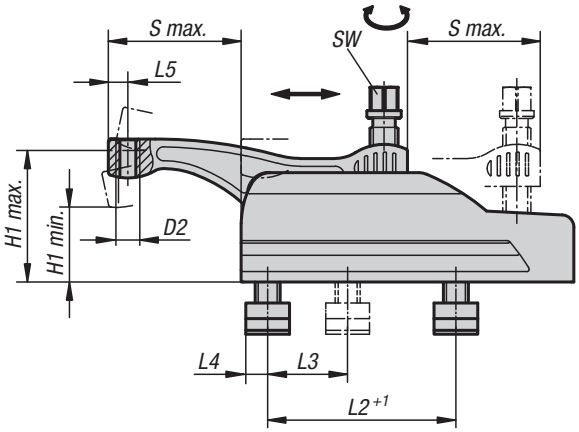


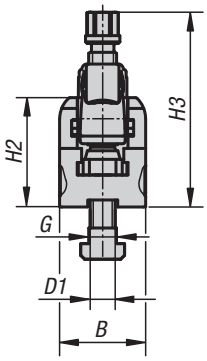


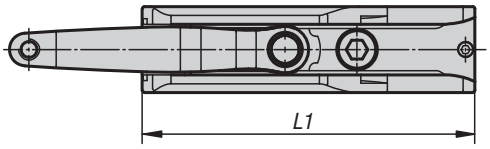


**Material:**
Body: carbon steel.
Tension lever: carbon steel, tempered.

**Version:**
Body: black coated.
Tension lever: silver coated.

**Sample order:**
K0840.012

**Note:**
These compact clamps are suitable for universal use on machined and rough parts. Thanks to the self-locking tension lever the clamps can be mounted in any position.

– tension lever fully retractable in housing for unimpeded workpiece changes.
– tension lever with tapped hole for various clamping elements e.g. ball-end thrust screws, self-aligning pads.
– impervious to dirt and swarf.

**Accessories:**
Risers K0840.112 and K0840.116 for increasing the clamping height.

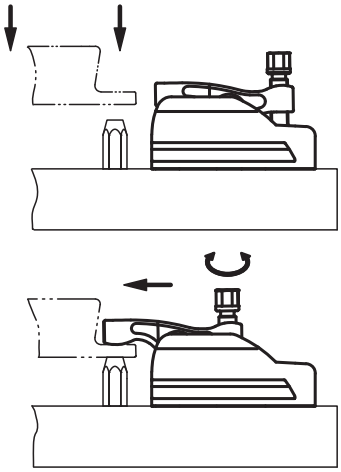

## KIPP Compact clamps

| Order No. | B | D1 | D2 | G for T-slot | H1 min. | H1 max. | H2 | H3 | L1 | L2 | L3 | L4 | L5 | S max. | SW | Tightening torque max. Nm | Clamping force max. kN | Approx. weight kg |
|---|---|---|---|---|---|---|---|---|---|---|---|---|---|---|---|---|---|---|
| **K0840.012** | 45 | M12x30 | M8 | 14 | 40 | 60 | 59 | 95 | 134 | 70 | 50 | 13 | 10 | 43 | 16 | 45 | 15 | 1,813 |
| **K0840.016** | 55 | M16x35 | M12 | 18 | 47 | 85 | 70 | 126 | 213 | 120 | 50 | 17 | 12,5 | 85 | 18 | 75 | 25 | 4,274 |

KIRÁLY TRADING KFT H-1151 Budapest Mogyoród útja 12 - 14 tel: 061307-3801 Email:pzoli@kiralytrading.hu

# Risers

for compact clamps

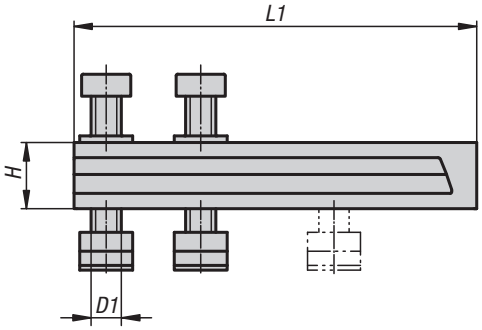


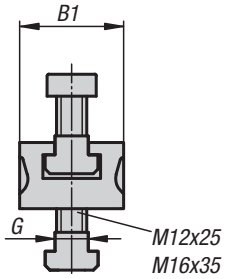


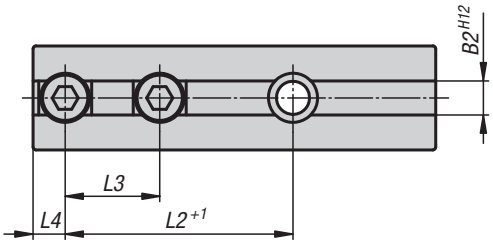


When stacking several risers the length of the ISO 10642 (DIN 7984) fastening bolts must be increased by the length H.

**Material:**
Carbon steel.

**Version:**
Coated black.

**Sample order:**
K0840.112

**Note:**
– infinite expansion of clamping height.
– T-slot in riser for precise positioning when moving the clamp within preset grid pitch.
– can be stacked to any height.

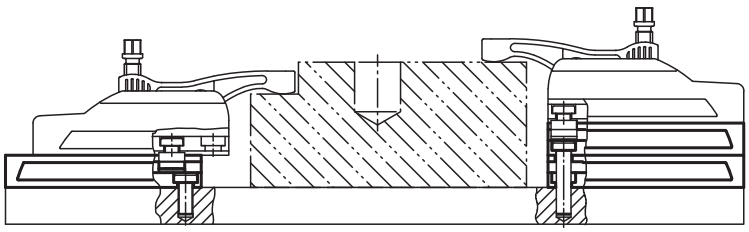

## KIPP Risers for compact clamps

| Order No. | B1 | B2 | D1 | G for T-slot | H | L1 | L2 | L3 | L4 |
|---|---|---|---|---|---|---|---|---|---|
| **K0840.112** | 45 | 14 | M12x20 | 14 | 20 | 134 | 70 | 50 | 13 |
| **K0840.116** | 55 | 18 | M16x25 | 18 | 35 | 213 | 120 | 50 | 17 |

KIRÁLY TRADING KFT H-1151 Budapest Mogyoród útja 12 - 14 tel: 061307-3801 Email:pzoli@kiralytrading.hu

# Clamping units

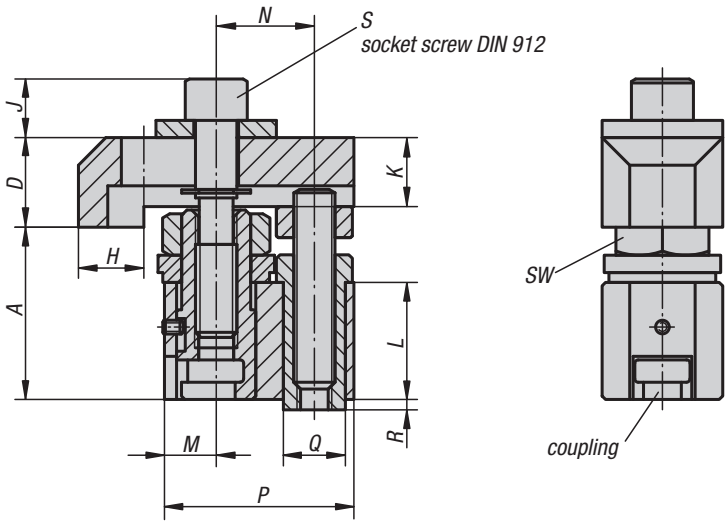


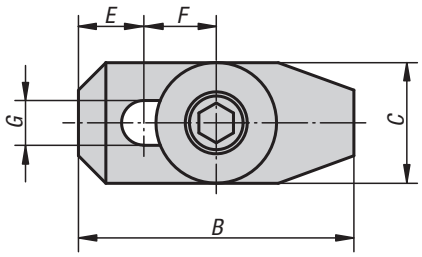


**Material:**
Riser and clamp strap high-strength aluminium.
Accessories carbon steel.

**Version:**
Riser and clamp strap anodized.
Accessories black oxidised.

**Sample order:**
K0841.12050055

**Note:**
Clamping units can be combined with risers and positioning units to form a clamping module.
By using risers the height of the clamping units can be increased almost indefinitely.

## KIPP Clamping units

| Order No. | Version | A | B | C | D | E | F | G | H | J | K | L | M | N | P | Q | R | S | SW | Approx. weight kg |
|---|---|---|---|---|---|---|---|---|---|---|---|---|---|---|---|---|---|---|---|---|
| **K0841.16055068** | short | 55-80 | 100 | 45 | 34 | 24 | 26 | 17 | 24 | 22 | 27 | 36,5 | 18 | 35 | 68 | 22 | 4 | M16x75 | 32 | 0,67 |
| **K0841.16055093** | long | 55-80 | 150 | 45 | 34 | 24 | 51 | 17 | 24 | 22 | 27 | 36,5 | 18 | 60 | 93 | 22 | 4 | M16x75 | 32 | 1,26 |

# K0842

# Clamp strap unit

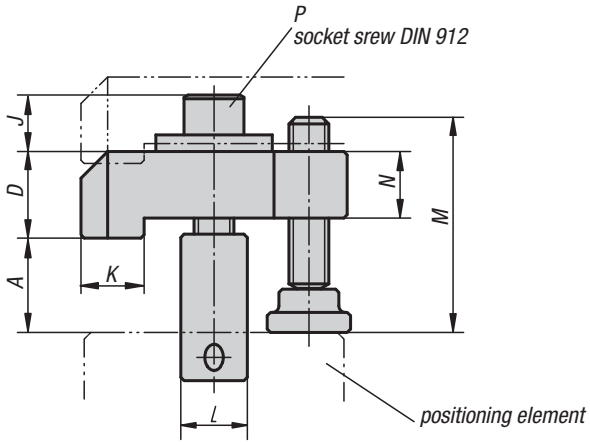


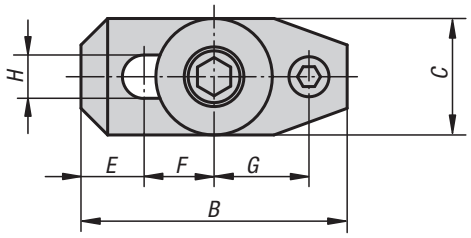


**Material:**
Strap high-strength aluminium.
Accessories carbon steel.

**Version:**
Clamp strap anodized.
Accessories black oxidised.

**Sample order:**
K0842.30016025

**Note:**
The clamp strap unit is mounted directly onto a positioning module.
The height of the clamp strap can be individually adjusted with a socket head screw (height adjustment 23-55 mm). For clamping heights 0-23 mm a connecting bush (K0850.700) must be used.

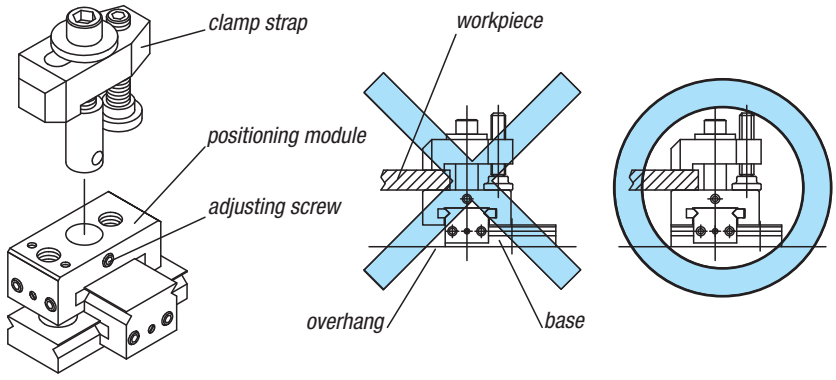


To secure the clamp tighten the adjusting screw located on the wide face of the upper slide.

The upper part of the positioning module must not project over the edge of the base if this is used to support a workpiece.

## KIPP Clamp strap unit

| Order No. | A | B | C | D | E | F | G | H | J | K | L | M | N | P | Approx. weight kg |
|---|---|---|---|---|---|---|---|---|---|---|---|---|---|---|---|
| **K0842.30016025** | 25-55 | 100 | 45 | 34 | 24 | 26 | 35 | 17 | 22 | 24 | 25 | 85 | 27 | M16x75 | 0,74 |

KIRÁLY TRADING KFT H-1151 Budapest Mogyoród útja 12 - 14 tel: 061307-3801 Email:pzoli@kiralytrading.hu

# Riser blocks

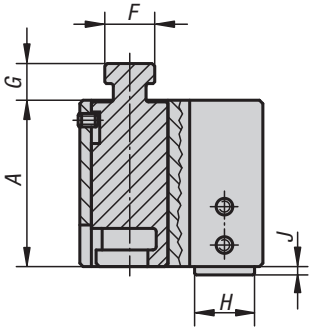


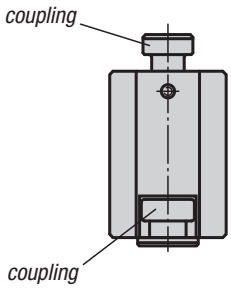


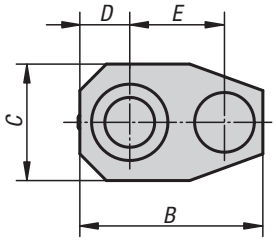


**Material:**
Riser blocks high-strength aluminium.
Connecting bolts and clamp screws carbon steel.

**Version:**
Riser blocks anodized.
Connecting bolts and clamp screws black oxidised.

**Sample order:**
K0843.16025068

**Note:**
The height of clamping units can be increased as required using these riser blocks.

Use long connecting screws for mounting directly onto the tooling plate.
Use short connecting screws for mounting onto a positioning unit.

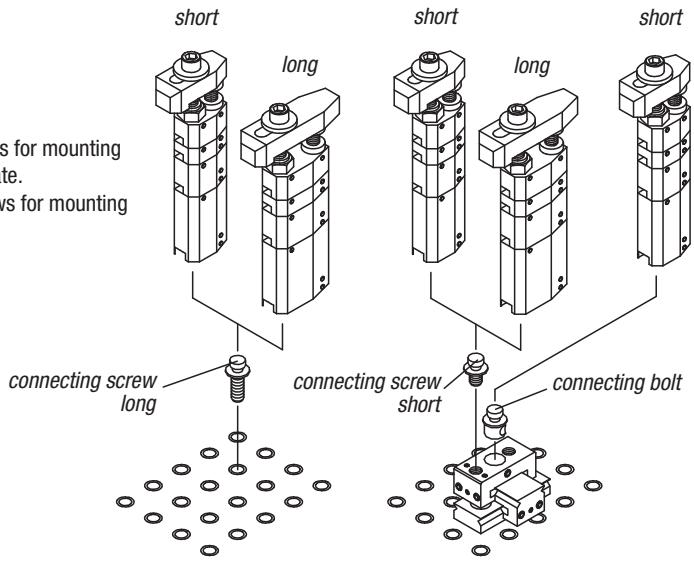


## KIPP Riser blocks

| Order No. | Version | A | B | C | D | E | F | G | H | J | Matching clamping units | Approx. weight kg |
|---|---|---|---|---|---|---|---|---|---|---|---|---|
| **K0843.16025068** | short | 25 | 68 | 45 | 18 | 35 | 25 | 9 | 22 | 4 | K0841.16055068 | 0,21 |
| **K0843.16050068** | short | 50 | 68 | 45 | 18 | 35 | 25 | 9 | 22 | 4 | K0841.16055068 | 0,4 |
| **K0843.16100068** | short | 100 | 68 | 45 | 18 | 35 | 25 | 9 | 22 | 4 | K0841.16055068 | 0,76 |
| **K0843.16025093** | long | 25 | 93 | 45 | 18 | 60 | 25 | 9 | 22 | 4 | K0841.16055093 | 0,34 |
| **K0843.16050093** | long | 50 | 93 | 45 | 18 | 60 | 25 | 9 | 22 | 4 | K0841.16055093 | 0,63 |
| **K0843.16100093** | long | 100 | 93 | 45 | 18 | 60 | 25 | 9 | 22 | 4 | K0841.16055093 | 1,22 |

KIRÁLY TRADING KFT H-1151 Budapest Mogyoród útja 12 - 14 tel: 061307-3801 Email:pzoli@kiralytrading.hu

# Connecting screws short

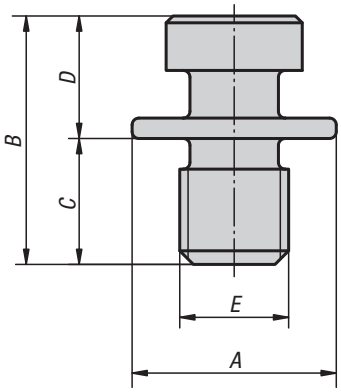


**Material:**
Carbon steel.

**Version:**
Black oxidised.

**Sample order:**
K0844.16025

**Note:**
Short connecting screws are used for the quick positioning and locking of clamping units onto positioning units.
See application example K0843.

## KIPP Connecting screws short

| Order No. | A | B | C | D | E |
|---|---|---|---|---|---|
| **K0844.16025** | 28 | 35 | 19 | 16 | M16 |

KIRÁLY TRADING KFT H-1151 Budapest Mogyoród útja 12 - 14 tel: 061307-3801 Email:pzoli@kiralytrading.hu

# Connecting screws long

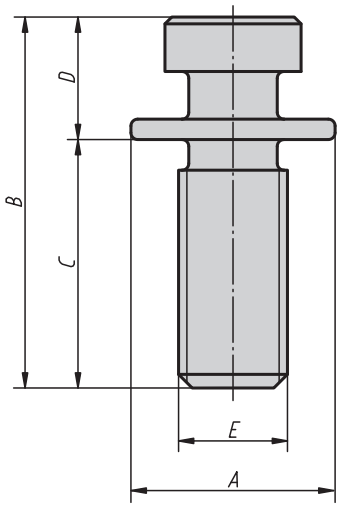


**Material:**
Carbon steel.

**Version:**
Black oxidised.

**Sample order:**
K0845.42216025

**Note:**
Long connecting screws are used for quick positioning and locking the clamping units directly onto a tooling plate.
See application example K0843.

## KIPP Connecting screws long

| Order No. | A | B | C | D | E | Approx. weight kg |
|---|---|---|---|---|---|---|
| **K0845.42216025** | 28 | 51 | 35 | 16 | M16 | 0,08 |

KIRÁLY TRADING KFT H-1151 Budapest Mogyoród útja 12 - 14 tel: 061307-3801 Email:pzoli@kiralytrading.hu

# Positioning units

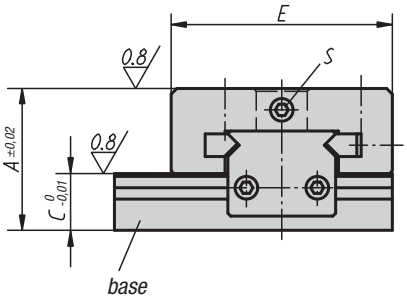


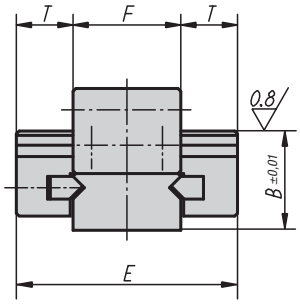


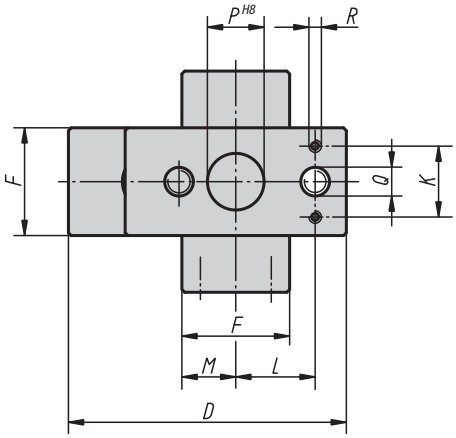


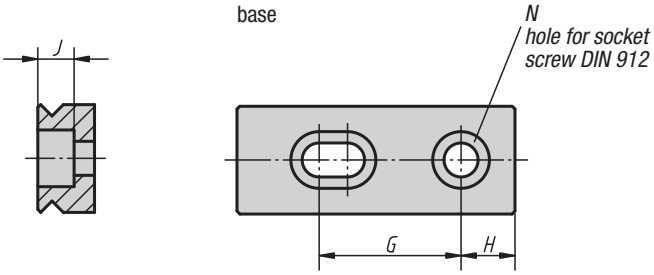


**Material:**
Carbon steel.

**Version:**
Ground, black oxidised.

**Sample order:**
K0846.20012050

**Note:**
Positioning units allow workpieces and clamping units to be positioned anywhere on the tooling plate (travel 40-50 mm).
Graduation marks on the slides allow the position to be read, and the clamping fixture construction to be documented.
Positioning units are modules that can be combined with wedge clamps, stops and clamping units to form a flexible clamping fixture.

## KIPP Positioning units

| Order No. | A | B | C | D | E | F | G | H | J | K | L | M | N | P | Q | R | S | T | Approx. weight kg |
|---|---|---|---|---|---|---|---|---|---|---|---|---|---|---|---|---|---|---|---|
| **K0846.20016063** | 63 | 43 | 23 | 123 | 98 | 48 | 50 | 24 | 17 | 32 | 34 | 25 | M16 | 25 | M16x19 | M6x12 | M10 | 25 | 2,85 |

KIRÁLY TRADING KFT H-1151 Budapest Mogyoród útja 12 - 14 tel: 061307-3801 Email:pzoli@kiralytrading.hu

# Technical notes for positioning units

Positioning units allow parts to be located at any desired position on the grid plate.

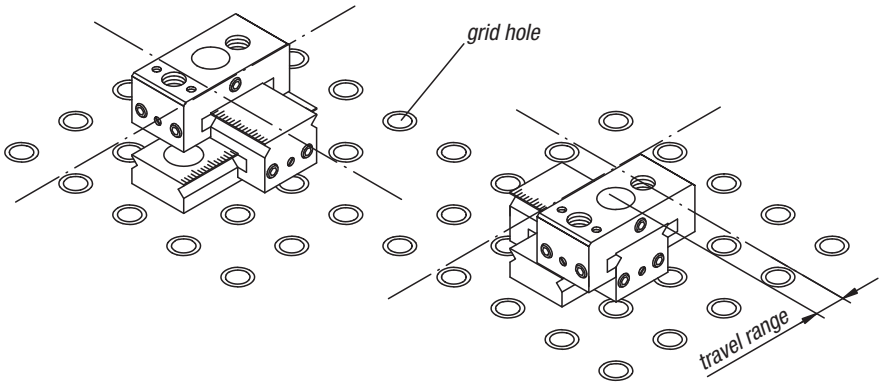


**Note:**

Use socket head screws to secure the base.

Tighten locking screws to lock the base after positioning.

The set screw allows the slide pressure to be adjusted.

The graduations on the base unit allow you to read off the position as well as to document the adjustment path.

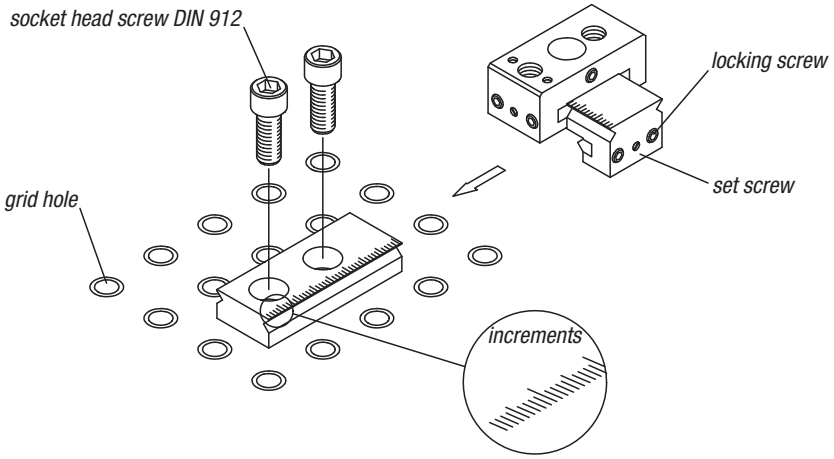

KIRÁLY TRADING KFT H-1151 Budapest Mogyoród útja 12 - 14 tel: 061307-3801 Email:pzoli@kiralytrading.hu

# Example of positioning unit use

The micrometer eases the precise positioning of the locating pin on the base unit to a desired distance from a grid hole on the grid plate.

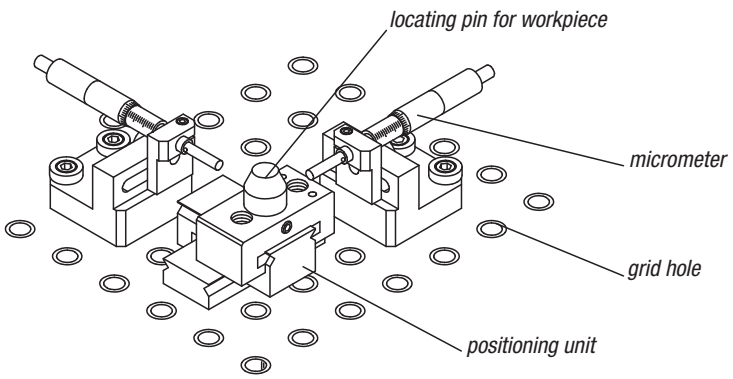


One application is positioning workpieces which have pre-drilled holes.

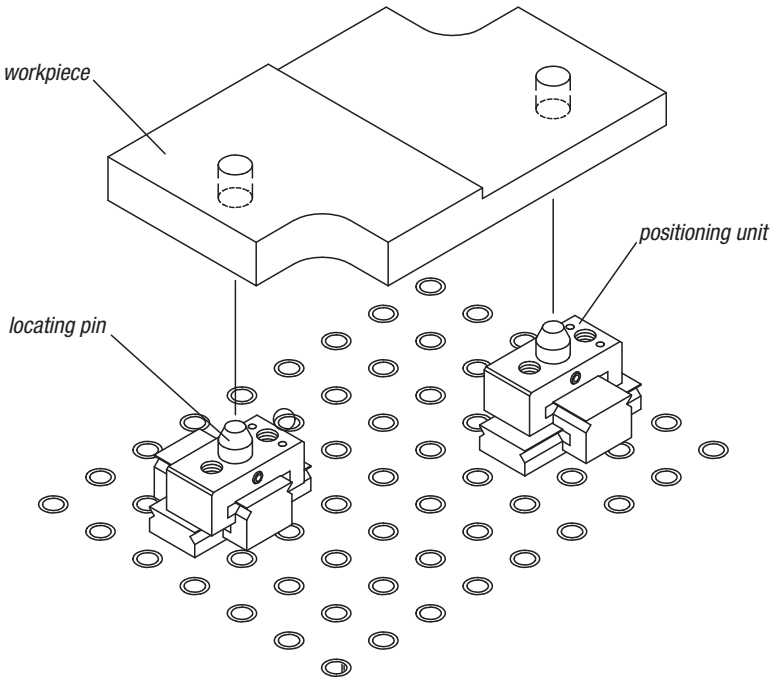

# K0847

## Connecting bolts

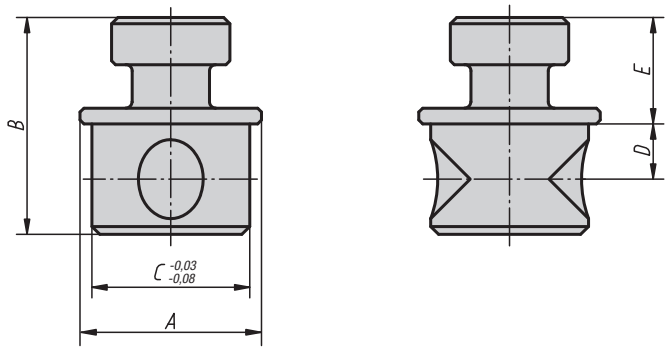

**Material:**
Carbon steel.

**Version:**
Black oxidised.

**Sample order:**
K0847.42016025

**Note:**
Connecting bolts are used for quickly positioning and locking clamping units (K0841.16055068) on positioning units.
See application example K0843.

### KIPP Connecting bolts

| Order No. | A | B | C | D | E | Approx. weight kg |
|---|---|---|---|---|---|---|
| **K0847.42016025** | 28 | 35 | 25 | 9,5 | 16 | 0,105 |

# K0848

## Rest pads

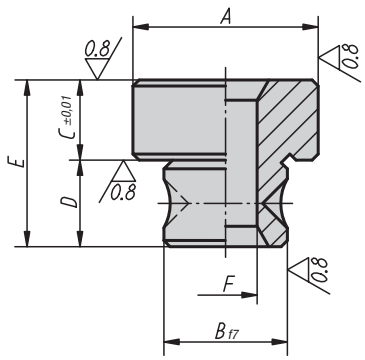

**Material:**
Carbon steel.

**Version:**
Case-hardened and ground.

**Sample order:**
K0848.55012030

**Note:**
These rest pads are for supporting workpieces on positioning units.

### KIPP Rest pads

| Order No. | A | B | C | D | E | F | Approx. weight kg |
|---|---|---|---|---|---|---|---|
| **K0848.55016040** | 40 | 25 | 17 | 19 | 36 | M16 | 0,19 |

K0849

# Support blocks

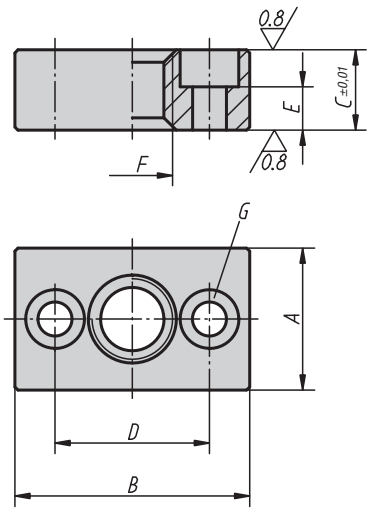


**Material:**
Carbon steel.

**Version:**
Case-hardened, ground, black oxidised.

**Sample order:**
K0849.60016017

**Note:**
Support blocks are used to support workpieces on positioning units.

## KIPP Support blocks

| Order No. | A | B | C | D | E | F | G for socket head screw | Approx. weight kg |
|---|---|---|---|---|---|---|---|---|
| **K0849.60016017** | 30 | 48 | 17 | 32 | 10 | M16 | M6 | 0,15 |

KIRÁLY TRADING KFT H-1151 Budapest Mogyoród útja 12 - 14 tel: 061307-3801 Email:pzoli@kiralytrading.hu

# Connecting bushes

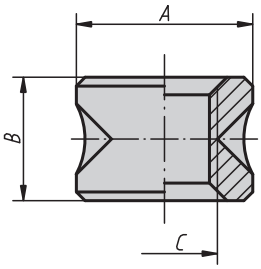


**Material:**
Carbon steel.

**Version:**
Case-hardened, black oxidised.

**Sample order:**
K0850.70016025

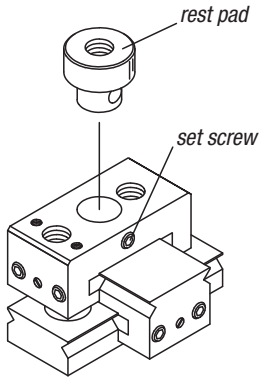


To secure, tighten the set screw.

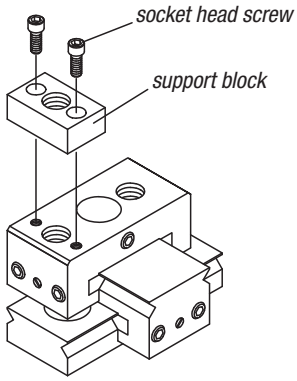


Secure support block on top slide with socket head screws.

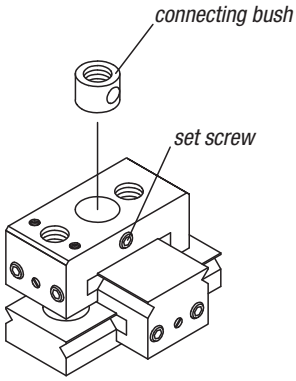


To secure, tighten the set screw.

## KIPP Connecting bushes

| Order No. | A | B | C | Approx. weight kg |
|---|---|---|---|---|
| **K0850.70016025** | 25 | 18 | M16 | 0,04 |

KIRÁLY TRADING KFT H-1151 Budapest Mogyoród útja 12 - 14 tel: 061307-3801 Email:pzoli@kiralytrading.hu

# Hook clamps

Form A

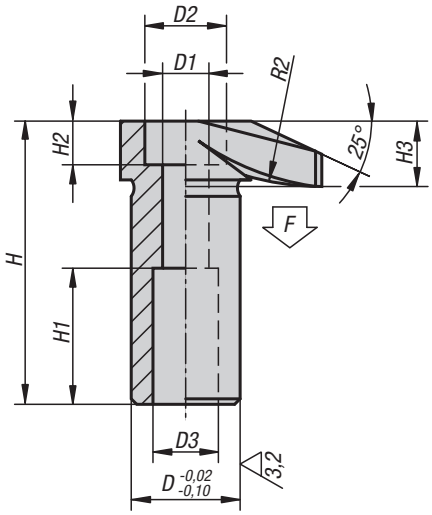


Form B

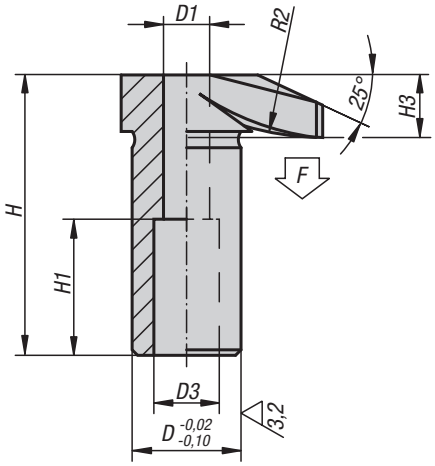


**Material:**
Carbon steel, tempered.

**Version:**
Black oxidised.

**Sample order:**
K0012.10

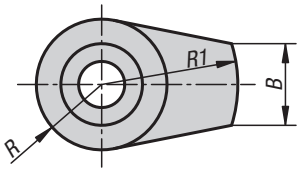


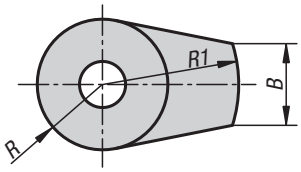


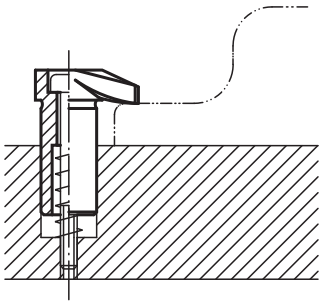

## KIPP Hook clamps

| Order No. | Form | D | D1 | D2 | D3 | H | H1 | H2 | H3 | B | R | R1 | R2 | F max. kN |
|---|---|---|---|---|---|---|---|---|---|---|---|---|---|---|
| **K0012.06** | A | 16 | 6,5 | 11 | 10 | 42 | 20 | 6 | 10 | 11 | 9 | 20 | 30 | 4,8 |
| **K0012.08** | A | 20 | 8,5 | 15 | 12 | 52 | 25 | 8 | 12 | 15 | 12 | 25 | 50 | 8,8 |
| **K0012.10** | A | 25 | 10,5 | 18 | 14 | 66 | 32 | 10 | 16 | 17 | 14 | 32 | 60 | 13,9 |
| **K0012.12** | A | 32 | 12,5 | 20 | 17 | 83 | 40 | 12 | 20 | 20 | 18 | 40 | 80 | 20,2 |

| Order No. | Form | D | D1 | D3 | H | H1 | H3 | B | R | R1 | R2 | F max. kN |
|---|---|---|---|---|---|---|---|---|---|---|---|---|
| **K0012.106** | B | 16 | 6,5 | 10 | 41,5 | 20 | 9,5 | 11 | 9 | 20 | 30 | 4,8 |
| **K0012.108** | B | 20 | 8,5 | 12 | 51,5 | 25 | 11,5 | 15 | 12 | 25 | 50 | 8,8 |
| **K0012.110** | B | 25 | 10,5 | 14 | 65,5 | 32 | 15,5 | 17 | 14 | 32 | 60 | 13,9 |
| **K0012.112** | B | 32 | 12,5 | 17 | 82,5 | 40 | 19,5 | 20 | 18 | 40 | 80 | 20,2 |

KIRÁLY TRADING KFT H-1151 Budapest Mogyoród útja 12 - 14 tel: 061307-3801 Email:pzoli@kiralytrading.hu

# Hook clamps

with collar

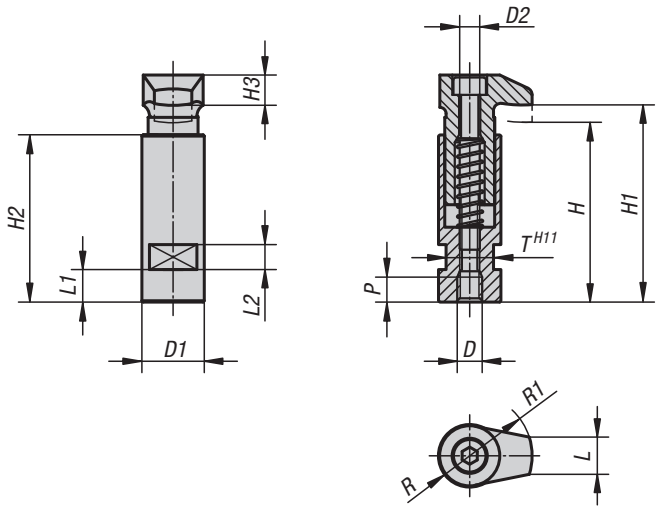


**Material:**
Carbon steel.

**Version:**
Tempered and black oxidised.

**Sample order:**
K0013.06

## KIPP Hook clamps with collar

| Order No. | D | D1 | D2 | H | H1 | H2 | H3 | L | L1 | L2 | P | R | R1 | T | Clamping force kN |
|---|---|---|---|---|---|---|---|---|---|---|---|---|---|---|---|
| **K0013.06** | M6 | 20 | 6 | 56 | 60 | 53 | 10 | 11 | 9 | 8 | 8 | 9 | 20 | 17 | 4,82 |
| **K0013.08** | M8 | 20 | 6 | 56 | 60 | 53 | 10 | 11 | 9 | 8 | 8 | 9 | 20 | 17 | 8,77 |
| **K0013.10** | M10 | 25 | 8 | 72 | 79 | 67 | 12 | 15 | 13 | 10 | 10 | 12 | 25 | 19 | 13,9 |
| **K0013.12** | M12 | 32 | 10 | 88 | 96 | 82 | 16 | 17 | 18 | 12 | 12 | 14 | 32 | 27 | 20,2 |
| **K0013.16** | M16 | 40 | 12 | 109 | 118 | 102 | 20 | 20 | 22 | 12 | 16 | 18 | 40 | 32 | 37,8 |

KIRÁLY TRADING KFT H-1151 Budapest Mogyoród útja 12 - 14 tel: 061307-3801 Email:pzoli@kiralytrading.hu

# Hook clamps ground

Form A/B/C

Form A

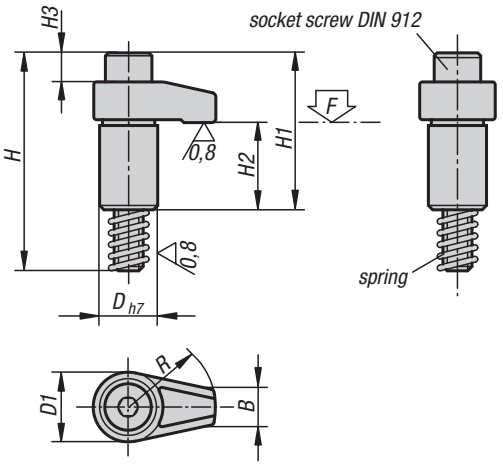

**Material:**
Carbon steel, tempered.

**Version:**
Black oxidised. Shaft OD ground.

**Sample order:**
K0014.216040

**Note:**
The stated clamping forces (F max.) and tightening torques are valid within the stated clamping ranges (H5).

Form B

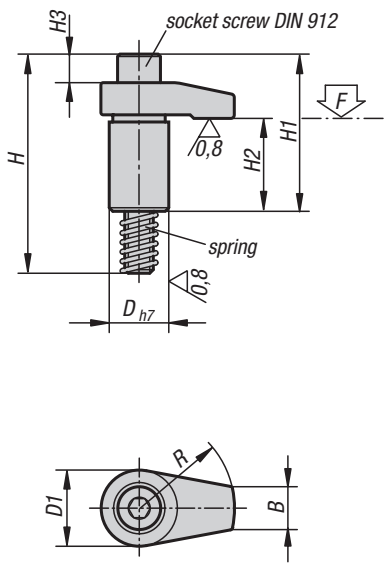


Form C

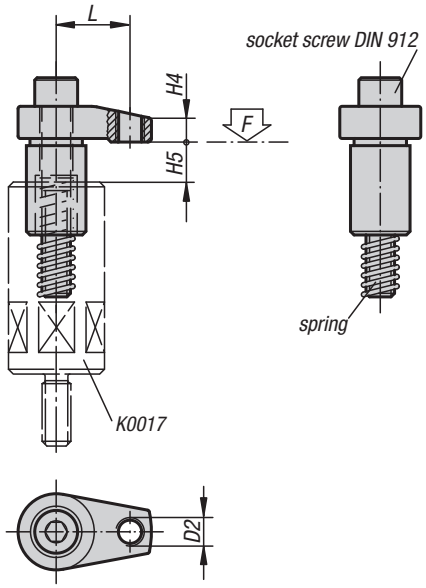


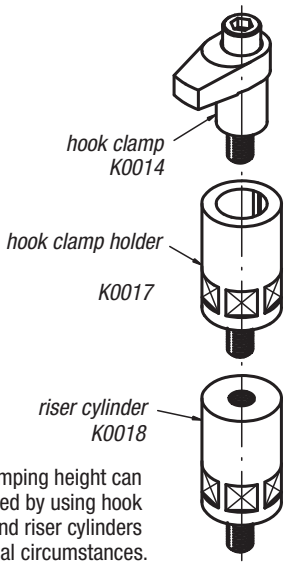


The clamping height can be adjusted by using hook clamp holders and riser cylinders to suit individual circumstances.

## KIPP Hook clamps, ground, Form A/B/C

| Order No. | Form | D | D1 | D2 | H | H1 | H2 | H3 | H4 | H5 max. clamping range | B | L | R | Socket head screw DIN 912 | Tightening torque max. Nm | F max. kN |
|---|---|---|---|---|---|---|---|---|---|---|---|---|---|---|---|---|
| **K0014.110030** | A | 20 | 25 | - | 75 | 54 | 30 | 9 | 10 | 12 | 12 | - | 30 | M10x65 | 37,2 | 13 |
| **K0014.110040** | A | 20 | 25 | - | 75 | 54 | 30 | 9 | 10 | 12 | 12 | - | 40 | M10x65 | 31,4 | 9,8 |
| **K0014.208020** | B | 18 | 22 | - | 58 | 37 | 23 | 2 | 7 | 10 | 10 | - | 20 | M8x50 | 37,2 | 13,6 |
| **K0014.208025** | B | 18 | 22 | - | 58 | 37 | 23 | 2 | 7 | 10 | 10 | - | 25 | M8x50 | 32,3 | 10,9 |
| **K0014.208030** | B | 18 | 22 | - | 58 | 37 | 23 | 2 | 7 | 10 | 10 | - | 30 | M8x50 | 29,4 | 9 |
| **K0014.212040** | B | 25 | 32 | - | 92 | 66 | 39 | 11 | 12 | 15 | 18 | - | 40 | M12x80 | 58,8 | 17,5 |
| **K0014.212050** | B | 25 | 32 | - | 92 | 68 | 39 | 11 | 12 | 15 | 18 | - | 50 | M12x80 | 49 | 14 |
| **K0014.212060** | B | 25 | 32 | - | 92 | 68 | 39 | 11 | 12 | 15 | 18 | - | 60 | M12x80 | 45,1 | 11,6 |
| **K0014.216040** | B | 32 | 36 | - | 101 | 75 | 39 | 15 | 15 | 15 | 22 | - | 40 | M16x85 | 166,6 | 37,9 |
| **K0014.216050** | B | 32 | 36 | - | 101 | 75 | 39 | 15 | 15 | 15 | 22 | - | 50 | M16x85 | 147 | 30,4 |
| **K0014.216060** | B | 32 | 36 | - | 101 | 75 | 39 | 15 | 15 | 15 | 22 | - | 60 | M16x85 | 127,4 | 25,2 |
| **K0014.312140** | C | 25 | 32 | M12 | 92 | 66 | 39 | 11 | 10 | 15 | 18 | 31 | 40 | M12x80 | 58,8 | 22,6 |
| **K0014.312150** | C | 25 | 32 | M12 | 92 | 68 | 39 | 11 | 13 | 15 | 18 | 38 | 50 | M12x80 | 49 | 18,5 |
| **K0014.312160** | C | 25 | 32 | M12 | 92 | 68 | 39 | 11 | 13 | 15 | 18 | 46 | 60 | M12x80 | 45,1 | 15,2 |
| **K0014.316150** | C | 32 | 36 | M12 | 101 | 75 | 39 | 15 | 16 | 15 | 22 | 38 | 50 | M16x85 | 147 | 38 |
| **K0014.316160** | C | 32 | 36 | M12 | 101 | 75 | 39 | 15 | 16 | 15 | 22 | 46 | 60 | M16x85 | 127,4 | 33 |

KIRÁLY TRADING KFT H-1151 Budapest Mogyoród útja 12 - 14 tel: 061307-3801 Email:pzoli@kiralytrading.hu

# Hook clamps

with collar

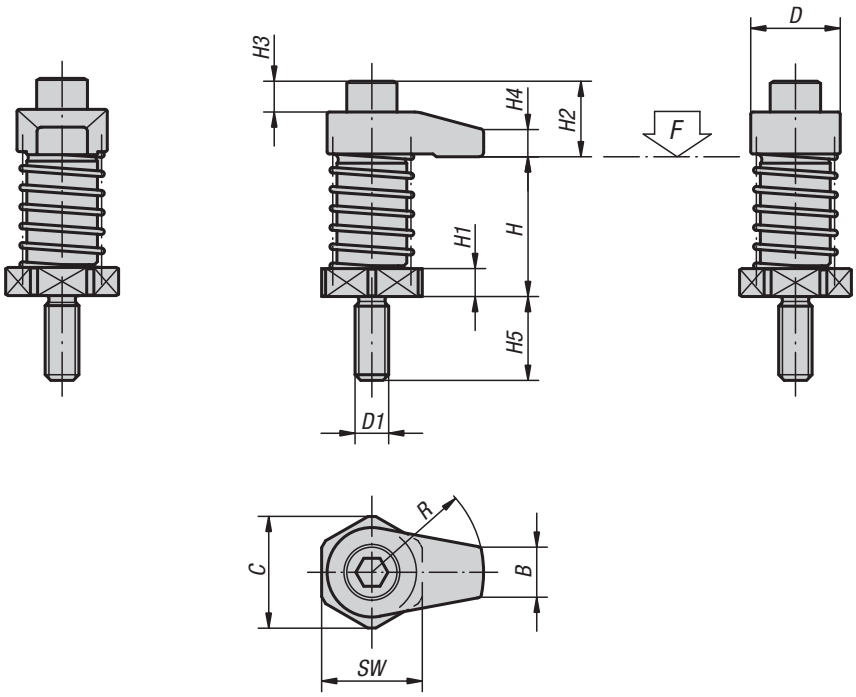


**Material:**
Hook clamps and hook clamp holders carbon steel, tempered.

**Version:**
Black oxidised.

**Sample order:**
K0015.12060

**Note:**
Hook clamps with collar can be screwed directly into grid holes etc. without counterbore.
For suitable riser elements, see riser cylinders K0018.

## KIPP Hook clamps with collar

| Order No. | D | D1 | H clamping range | H1 | H2 | H3 | H4 | H5 | B | C | R | SW | Tightening torque max. Nm | F max. kN |
|---|---|---|---|---|---|---|---|---|---|---|---|---|---|---|
| **K0015.08020** | 22 | M8 | 35 - 45 | 6 | 14 | 2 | 7 | 19 | 10 | 25 | 20 | 22 | 20 | 7,9 |
| **K0015.08025** | 22 | M8 | 35 - 45 | 6 | 14 | 2 | 7 | 19 | 10 | 25 | 25 | 22 | 20 | 7,3 |
| **K0015.08030** | 22 | M8 | 35 - 45 | 6 | 14 | 2 | 7 | 19 | 10 | 25 | 30 | 22 | 20 | 6,7 |
| **K0015.08120** | 22 | M8 | 45 - 55 | 16 | 14 | 2 | 7 | 19 | 10 | 25 | 20 | 22 | 20 | 7,9 |
| **K0015.08125** | 22 | M8 | 45 - 55 | 16 | 14 | 2 | 7 | 19 | 10 | 25 | 25 | 22 | 20 | 7,3 |
| **K0015.08130** | 22 | M8 | 45 - 55 | 16 | 14 | 2 | 7 | 19 | 10 | 25 | 30 | 22 | 20 | 6,7 |
| **K0015.12040** | 32 | M12 | 50 - 65 | 10 | 27 | 11 | 10 | 30 | 18 | 40 | 40 | 36 | 45 | 13,5 |
| **K0015.12050** | 32 | M12 | 50 - 65 | 10 | 29 | 11 | 12 | 30 | 18 | 40 | 50 | 36 | 45 | 12,6 |
| **K0015.12060** | 32 | M12 | 50 - 65 | 10 | 29 | 11 | 12 | 30 | 18 | 40 | 60 | 36 | 45 | 11,7 |
| **K0015.12140** | 32 | M12 | 65 - 80 | 25 | 27 | 11 | 10 | 30 | 18 | 40 | 40 | 36 | 45 | 13,5 |
| **K0015.12150** | 32 | M12 | 65 - 80 | 25 | 29 | 11 | 12 | 30 | 18 | 40 | 50 | 36 | 45 | 12,6 |
| **K0015.12160** | 32 | M12 | 65 - 80 | 25 | 29 | 11 | 12 | 30 | 18 | 40 | 60 | 36 | 45 | 11,7 |
| **K0015.16040** | 36 | M16 | 50 - 65 | 10 | 36 | 15 | 15 | 30 | 22 | 40 | 40 | 36 | 60 | 13,4 |
| **K0015.16050** | 36 | M16 | 50 - 65 | 10 | 36 | 15 | 15 | 30 | 22 | 40 | 50 | 36 | 60 | 12,4 |
| **K0015.16060** | 36 | M16 | 50 - 65 | 10 | 36 | 15 | 15 | 30 | 22 | 40 | 60 | 36 | 60 | 12 |
| **K0015.16140** | 36 | M16 | 65 - 80 | 25 | 36 | 15 | 15 | 30 | 22 | 40 | 40 | 36 | 60 | 13,4 |
| **K0015.16150** | 36 | M16 | 65 - 80 | 25 | 36 | 15 | 15 | 30 | 22 | 40 | 50 | 36 | 60 | 12,4 |
| **K0015.16160** | 36 | M16 | 65 - 80 | 25 | 36 | 15 | 15 | 30 | 22 | 40 | 60 | 36 | 60 | 12 |

KIRÁLY TRADING KFT H-1151 Budapest Mogyoród útja 12 - 14 tel: 061307-3801 Email:pzoli@kiralytrading.hu

# Hook clamp holders

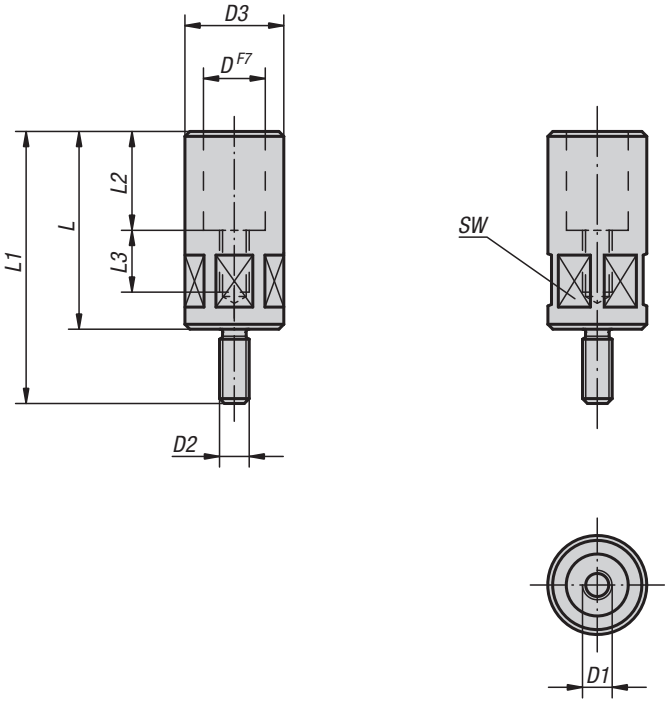


**Material:**
Carbon steel.

**Version:**
Black oxidised.

**Sample order:**
K0017.12080

**Note:**
Hook clamp holders are for holding and raising hook clamps.

## KIPP Hook clamp holders

| Order No. | D | D1 | D2 | D3 | L | L1 | L2 | L3 | SW | Tightening torque max. Nm |
|---|---|---|---|---|---|---|---|---|---|---|
| **K0017.08055** | 18 | M8 | M8 | 24 | 55 | 74 | 25 | 20 | 22 | 29,4 |
| **K0017.10063** | 20 | M10 | M12 | 32 | 63 | 93 | 30 | 21 | 30 | 39,2 |
| **K0017.10080** | 20 | M10 | M12 | 32 | 80 | 110 | 30 | 23 | 30 | 39,2 |
| **K0017.12080** | 25 | M12 | M12 | 40 | 80 | 110 | 40 | 25 | 36 | 49 |
| **K0017.12100** | 25 | M12 | M12 | 40 | 100 | 130 | 40 | 28 | 36 | 49 |
| **K0017.16080** | 32 | M16 | M16 | 50 | 80 | 110 | 40 | 25 | 46 | 78,4 |
| **K0017.16100** | 32 | M16 | M16 | 50 | 100 | 130 | 40 | 28 | 46 | 78,4 |

KIRÁLY TRADING KFT H-1151 Budapest Mogyoród útja 12 - 14 tel: 061307-3801 Email:pzoli@kiralytrading.hu

# Riser cylinders

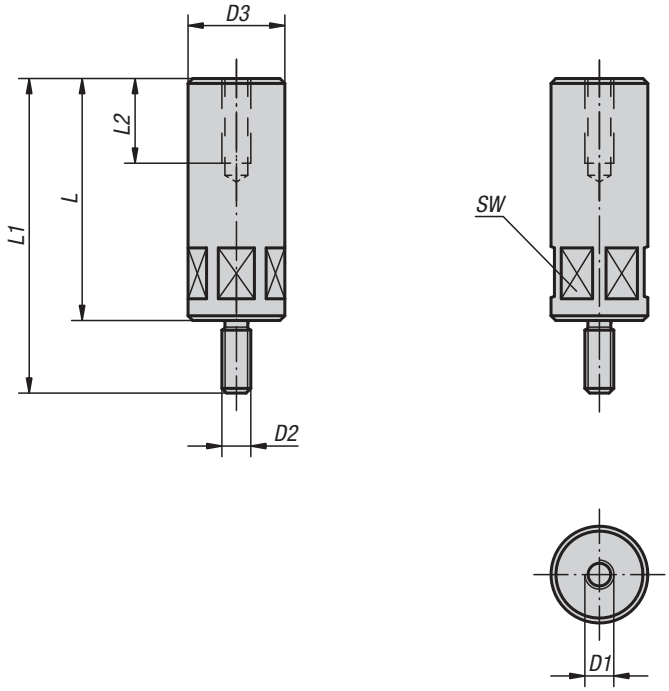


**Material:**
Carbon steel.

**Version:**
Black oxidised.

**Sample order:**
K0018.16050

**Note:**
The height of the hook clamps and hook clamp holders can be raised with riser cylinders.

## KIPP Riser cylinders

| Order No. | D1 | D2 | D3 | L | L1 | L2 | SW | Tightening torque max. Nm |
|---|---|---|---|---|---|---|---|---|
| **K0018.08032** | M8 | M8 | 24 | 32 | 51 | 20 | 22 | 29,4 |
| **K0018.08040** | M8 | M8 | 24 | 40 | 59 | 20 | 22 | 29,4 |
| **K0018.08050** | M8 | M8 | 24 | 50 | 69 | 20 | 22 | 29,4 |
| **K0018.08065** | M8 | M8 | 24 | 65 | 84 | 20 | 22 | 29,4 |
| **K0018.12050** | M12 | M12 | 40 | 50 | 80 | 35 | 36 | 49 |
| **K0018.12065** | M12 | M12 | 40 | 65 | 95 | 35 | 36 | 49 |
| **K0018.12080** | M12 | M12 | 40 | 80 | 110 | 35 | 36 | 49 |
| **K0018.12100** | M12 | M12 | 40 | 100 | 130 | 35 | 36 | 49 |
| **K0018.12125** | M12 | M12 | 40 | 125 | 155 | 35 | 36 | 49 |
| **K0018.12160** | M12 | M12 | 40 | 160 | 190 | 35 | 36 | 49 |
| **K0018.12200** | M12 | M12 | 40 | 200 | 230 | 35 | 36 | 49 |
| **K0018.16050** | M16 | M16 | 50 | 50 | 80 | 35 | 46 | 78,4 |
| **K0018.16065** | M16 | M16 | 50 | 65 | 95 | 35 | 46 | 78,4 |
| **K0018.16080** | M16 | M16 | 50 | 80 | 110 | 35 | 46 | 78,4 |
| **K0018.16100** | M16 | M16 | 50 | 100 | 130 | 35 | 46 | 78,4 |
| **K0018.16125** | M16 | M16 | 50 | 125 | 155 | 35 | 46 | 78,4 |
| **K0018.16160** | M16 | M16 | 60 | 160 | 190 | 35 | 55 | 78,4 |
| **K0018.16200** | M16 | M16 | 60 | 200 | 230 | 35 | 55 | 78,4 |

KIRÁLY TRADING KFT H-1151 Budapest Mogyoród útja 12 - 14 tel: 061307-3801 Email:pzoli@kiralytrading.hu

# Hook clamp holders

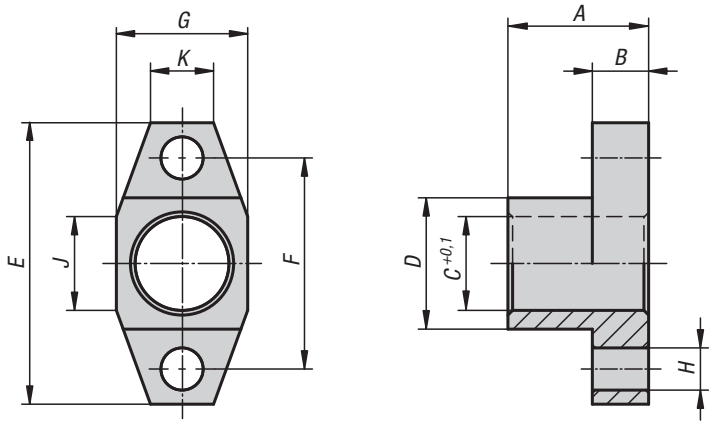


**Material:**
Carbon steel 1.0503

**Version:**
Black oxidised.

**Sample order:**
K0851.08025

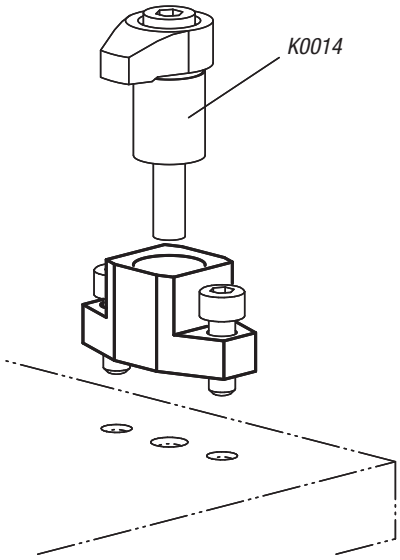


## KIPP Hook clamp holders

| Order No. | A | B | C | D | E | F | G | H | J | K |
|---|---|---|---|---|---|---|---|---|---|---|
| **K0851.08025** | 25 | 10 | 18 | 24 | 50 | 38 | 24 | 6,6 | 15 | 11,3 |
| **K0851.10030** | 30 | 12 | 20 | 28 | 60 | 45 | 28 | 9 | 20 | 13,4 |
| **K0851.12040** | 40 | 14 | 25 | 35 | 75 | 55 | 35 | 11 | 20 | 15 |
| **K0851.16040** | 40 | 16 | 32 | 42 | 85 | 65 | 42 | 13,5 | 25 | 20,2 |

KIRÁLY TRADING KFT H-1151 Budapest Mogyoród útja 12 - 14 tel: 061307-3801 Email:pzoli@kiralytrading.hu

# Stop blocks

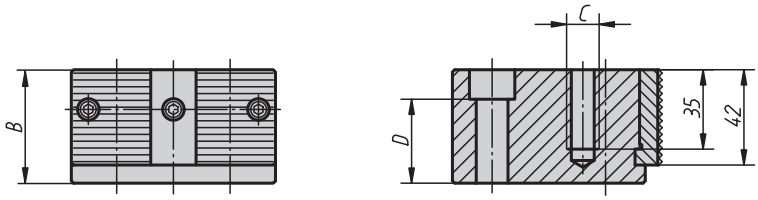


**Material, version:**
Carbon steel, black oxidised.
Contact face or jaw tempered, black oxidised.

**Sample order:**
K0852.12050

**Note:**
Normally used as a stop element for unmachined parts.

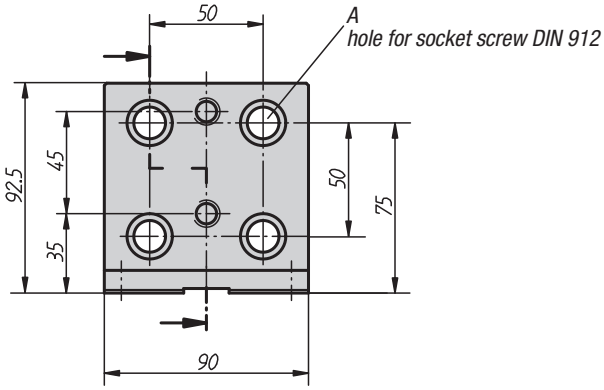


## KIPP Stop blocks

| Order No. | A Hole for | B | C | D | Approx. weight kg |
|---|---|---|---|---|---|
| **K0852.12050** | M12 | 50 | M12 | 37 | 2,73 |
| **K0852.12063** | M12 | 63 | M12 | 37 | 3,352 |
| **K0852.12080** | M12 | 80 | M12 | 37 | 4,168 |
| **K0852.12100** | M12 | 100 | M12 | 37 | 5,15 |
| **K0852.16050** | M16 | 50 | M16 | 33 | 2,445 |
| **K0852.16063** | M16 | 63 | M16 | 46 | 3,075 |
| **K0852.16080** | M16 | 80 | M16 | 46 | 3,816 |
| **K0852.16100** | M16 | 100 | M16 | 46 | 5,16 |

# K0853

## Toe clamps

stepped

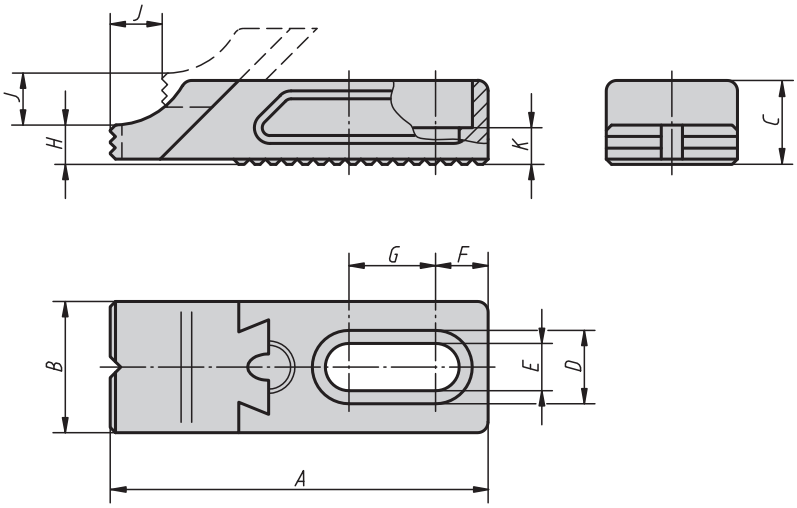

**Material, version:**
Body carbon steel, black oxidised.
Jaw carbon steel, tempered, black oxidised.

**Sample order:**
K0853.92008016

**Note:**
The adjustable toe clamp is used together with the rack plate CL.

### KIPP Toe clamps, stepped

| Order No. | A | B | C | D | E | F | G | H | J | K | Approx. weight kg |
|---|---|---|---|---|---|---|---|---|---|---|---|
| **K0853.92008016** | 72 | 25 | 16 | 14 | 8,5 | 10 | 16,5 | 7,5 | 7 | 7 | 0,14 |
| **K0853.92012022** | 105 | 35 | 22 | 20 | 13 | 13,5 | 26,5 | 10 | 12 | 9 | 0,383 |
| **K0853.92016030** | 137 | 40 | 30 | 26 | 17 | 17,5 | 30 | 14 | 14 | 13 | 0,797 |

# K0853

## Toe clamps

stepped

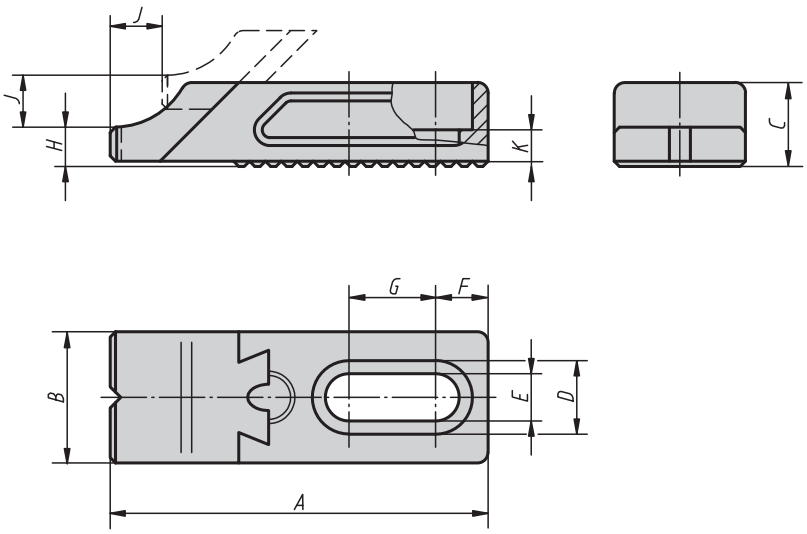

**Material, version:**
Body carbon steel, burnished.
Jaw carbon steel, tempered.
The jaw surface is ground.

**Sample order:**
K0853.92108016

**Note:**
The adjustable toe clamp is used together with the rack plate CL.

### KIPP Toe clamps, stepped

| Order No. | A | B | C | D | E | F | G | H | J | K | Approx. weight kg |
|---|---|---|---|---|---|---|---|---|---|---|---|
| **K0853.92108016** | 72 | 25 | 16 | 14 | 8,5 | 10 | 16,5 | 7,5 | 7 | 7 | 0,14 |
| **K0853.92112022** | 105 | 35 | 22 | 20 | 13 | 13,5 | 26,5 | 10 | 12 | 9 | 0,383 |
| **K0853.92116030** | 137 | 40 | 30 | 26 | 17 | 17,5 | 30 | 14 | 14 | 13 | 0,818 |

# K0853

## Toe clamps

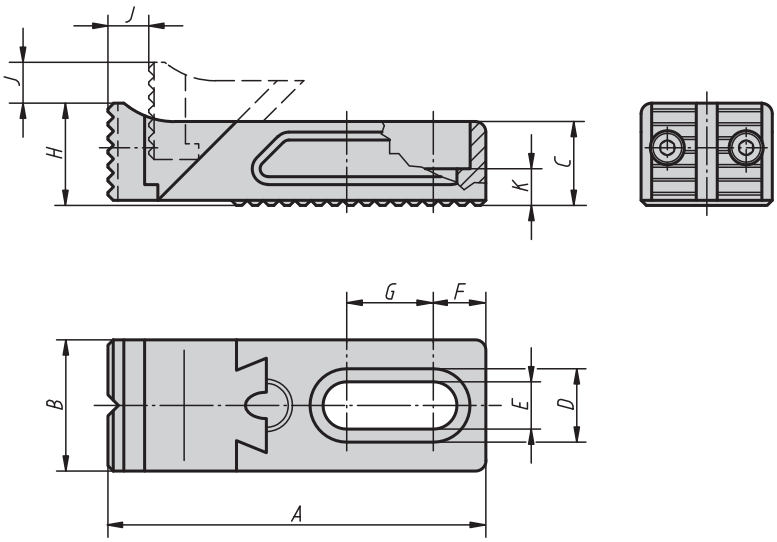

**Material, version:**
Body carbon steel, black oxidised.
Jaw carbon steel, tempered and black oxidised.

**Sample order:**
K0853.93008016

**Note:**
The adjustable toe clamp is used together with the rack plate CL.

### KIPP Toe clamps

| Order No. | A | B | C | D | E | F | G | H | J | K | Approx. weight kg |
|---|---|---|---|---|---|---|---|---|---|---|---|
| **K0853.93008016** | 72 | 25 | 16 | 14 | 8,5 | 10 | 16,5 | 19,5 | 7 | 7 | 0,16 |
| **K0853.93012022** | 105 | 35 | 22 | 20 | 13 | 13,5 | 26,5 | 29 | 12 | 9 | 0,44 |
| **K0853.93016030** | 137 | 40 | 30 | 26 | 17 | 17,5 | 30 | 39 | 14 | 13 | 0,92 |

# K0853

## Toe clamps

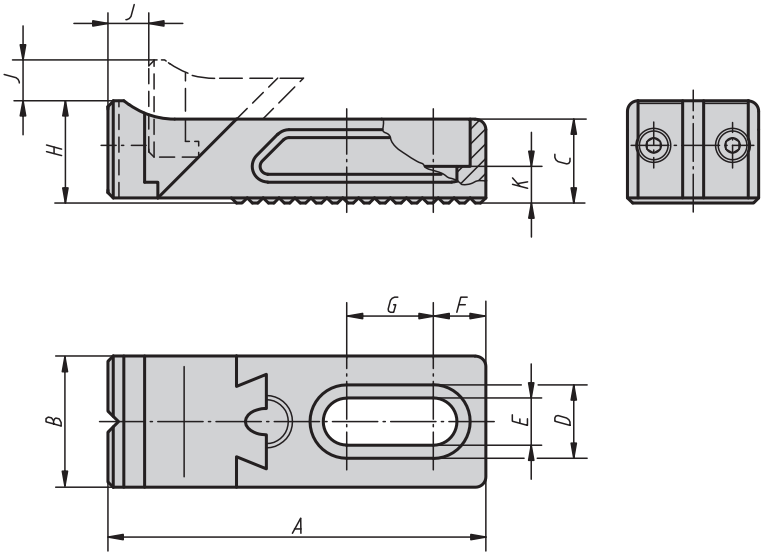

**Material, version:**
Body carbon steel, black oxidised.
Jaw carbon steel, tempered and black oxidised.
The jaw surface is ground.

**Sample order:**
K0853.93108016

**Note:**
The adjustable toe clamp is used together with the rack plate CL.

### KIPP Toe clamps

| Order No. | A | B | C | D | E | F | G | H | J | K | Approx. weight kg |
|---|---|---|---|---|---|---|---|---|---|---|---|
| **K0853.93108016** | 72 | 25 | 16 | 14 | 8,5 | 10 | 16,5 | 19,5 | 7 | 7 | 0,16 |
| **K0853.93112022** | 105 | 35 | 22 | 20 | 13 | 13,5 | 26,5 | 29 | 12 | 9 | 0,44 |
| **K0853.93116030** | 137 | 40 | 30 | 26 | 17 | 17,5 | 30 | 39 | 14 | 13 | 0,92 |

KIRÁLY TRADING KFT H-1151 Budapest Mogyoród útja 12 - 14 tel: 061307-3801 Email:pzoli@kiralytrading.hu

# Rack plates CL

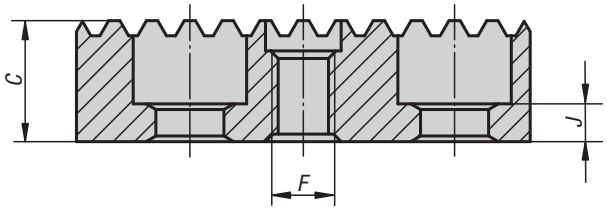


**Material:**
Carbon steel.

**Version:**
Black oxidised.

**Sample order:**
K0853.94008116

**Note:**
Rack plates CL are used to position stepped and standard toe clamps.
The holes (G) for DIN 912 socket head screws is used to fasten the rack plate CL to suitable base elements.
The tapped hole (F) is used to secure the toe clamps.

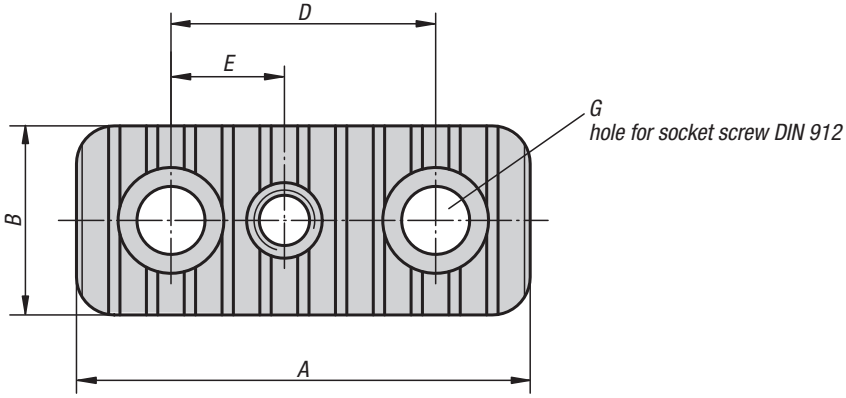

## KIPP Rack plates CL

| Order No. | A | B | C | D | E | F | G hole for | J | Approx. weight kg |
|---|---|---|---|---|---|---|---|---|---|
| K0853.94008116 | 50 | 25 | 16 | 25 | 12,5 | M8 | M8 | 7 | 0,115 |
| K0853.94008120 | 50 | 25 | 20 | 25 | 12,5 | M8 | M8 | 9 | 0,14 |
| K0853.94008125 | 50 | 25 | 25 | 25 | 12,5 | M8 | M8 | 13 | 0,18 |
| K0853.94008132 | 50 | 25 | 32 | 25 | 12,5 | M8 | M8 | 20 | 0,24 |
| K0853.94008140 | 50 | 25 | 40 | 25 | 12,5 | M8 | M8 | 28 | 0,305 |
| K0853.94008150 | 50 | 25 | 50 | 25 | 12,5 | M8 | M8 | 38 | 0,385 |
| K0853.94012020 | 85 | 35 | 20 | 50 | 20 | M12 | M12 | 5 | 0,33 |
| K0853.94012025 | 85 | 35 | 25 | 50 | 20 | M12 | M12 | 12 | 0,505 |
| K0853.94012032 | 85 | 35 | 32 | 50 | 20 | M12 | M12 | 12 | 0,643 |
| K0853.94012040 | 85 | 35 | 40 | 50 | 20 | M12 | M12 | 12 | 0,703 |
| K0853.94012050 | 85 | 35 | 50 | 50 | 20 | M12 | M12 | 12 | 0,88 |
| K0853.94016025 | 90 | 40 | 25 | 50 | 25 | M16 | M16 | 6 | 0,45 |
| K0853.94016032 | 90 | 40 | 32 | 50 | 25 | M16 | M16 | 13 | 0,715 |
| K0853.94016040 | 90 | 40 | 40 | 50 | 25 | M16 | M16 | 15 | 0,88 |
| K0853.94016050 | 90 | 40 | 50 | 50 | 25 | M16 | M16 | 15 | 0,96 |
| K0853.94016063 | 90 | 40 | 63 | 50 | 25 | M16 | M16 | 15 | 1,21 |

# K0853

## Toe stops

stepped

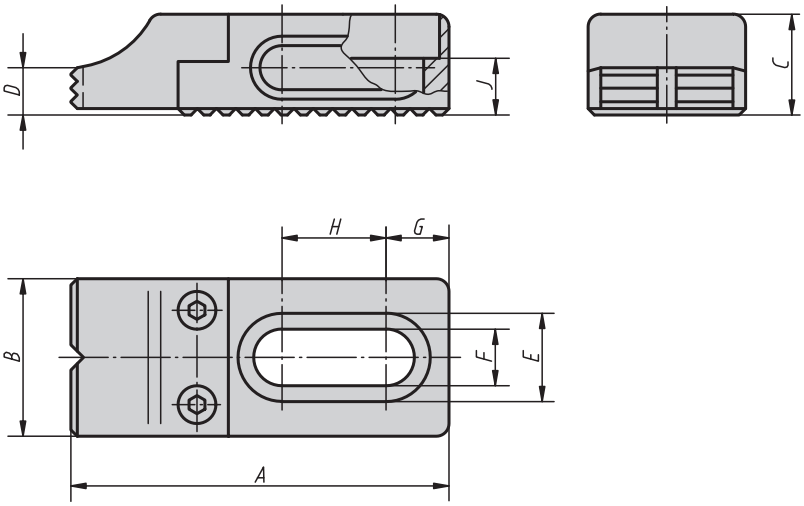

**Material, version:**
Body carbon steel, black oxidised.
Jaw carbon steel, tempered and black oxidised.

**Sample order:**
K0853.96008016

**Note:**
The adjustable toe stop is used together with the rack plate CL.

### KIPP Toe stops, stepped

| Order No. | A | B | C | D | E | F | G | H | J | Approx. weight kg |
|---|---|---|---|---|---|---|---|---|---|---|
| **K0853.96008016** | 60 | 25 | 16 | 7,5 | 14 | 8,5 | 10 | 16,5 | 7 | 0,12 |
| **K0853.96012022** | 90 | 35 | 22 | 10 | 20 | 13 | 13,5 | 26,5 | 10 | 0,33 |
| **K0853.96016030** | 115 | 40 | 30 | 14 | 26 | 17 | 17,5 | 30 | 13 | 0,66 |

# K0853

## Toe stops

stepped

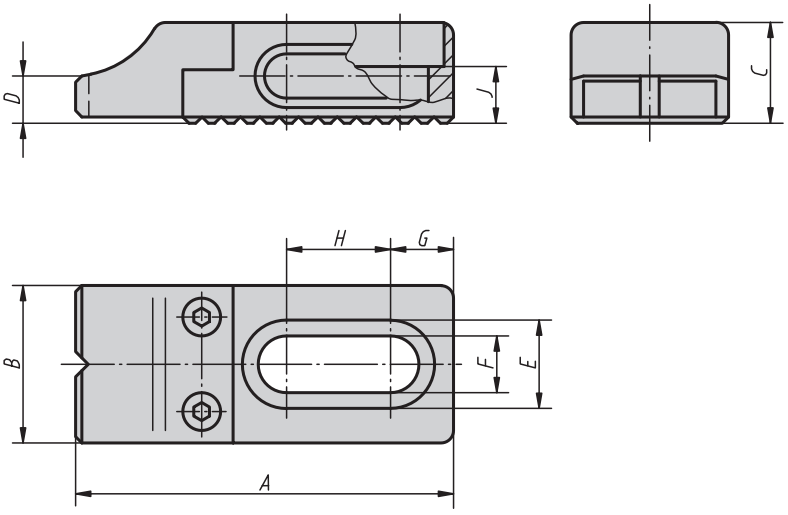

**Material, version:**
Body carbon steel, black oxidised.
Jaw carbon steel, tempered and black oxidised.
The jaw surface is ground.

**Sample order:**
K0853.96108016

**Note:**
The adjustable toe stop is used together with the rack plate CL.

### KIPP Toe stops, stepped

| Order No. | A | B | C | D | E | F | G | H | J | Approx. weight kg |
|---|---|---|---|---|---|---|---|---|---|---|
| **K0853.96108016** | 60 | 25 | 16 | 7,5 | 14 | 8,5 | 10 | 16,5 | 7 | 0,12 |
| **K0853.96112022** | 90 | 35 | 22 | 10 | 20 | 13 | 13,5 | 26,5 | 10 | 0,33 |
| **K0853.96116030** | 115 | 40 | 30 | 14 | 26 | 17 | 17,5 | 30 | 13 | 0,66 |

# K0853

## Toe stops

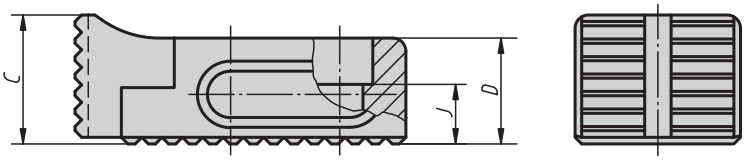


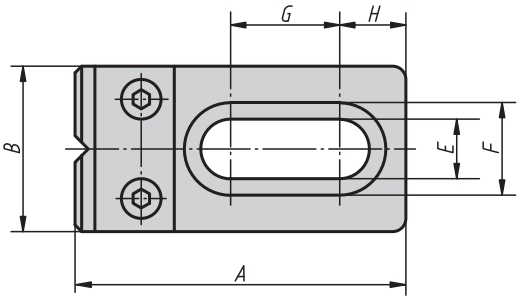

**Material, version:**
Body carbon steel, black oxidised.
Jaw carbon steel, tempered and black oxidised.

**Sample order:**
K0853.97008016

**Note:**
The adjustable side stop is used together with the rack plate CL.

### KIPP Toe stops

| Order No. | A | B | C | D | E | F | G | H | J | Approx. weight kg |
|---|---|---|---|---|---|---|---|---|---|---|
| **K0853.97008016** | 50 | 25 | 19,5 | 16 | 8,5 | 14 | 16,5 | 10 | 7 | 0,110 |
| **K0853.97012022** | 75 | 35 | 29 | 22 | 13 | 20 | 26,5 | 13,5 | 10 | 0,300 |
| **K0853.97016030** | 95 | 40 | 39 | 30 | 17 | 26 | 30 | 17,5 | 13 | 0,595 |

# K0853

## Toe stops

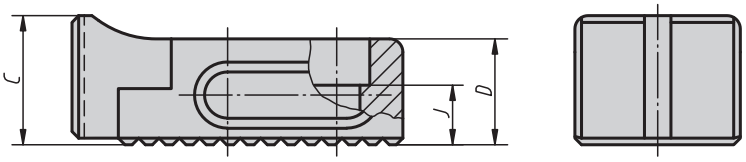


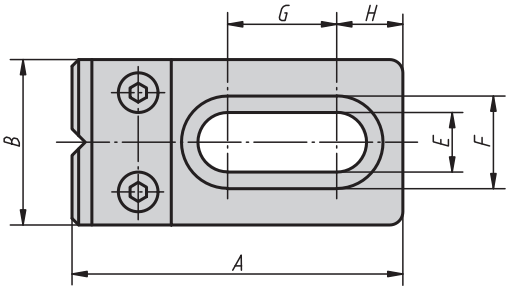

**Material, version:**
Body carbon steel, black oxidised.
Jaw carbon steel, tempered and black oxidised.
The jaw surface is ground.

**Sample order:**
K0853.97108016

**Note:**
The adjustable side stop is used together with the rack plate CL.

### KIPP Toe stops

| Order No. | A | B | C | D | E | F | G | H | J | Approx. weight kg |
|---|---|---|---|---|---|---|---|---|---|---|
| **K0853.97108016** | 50 | 25 | 19,5 | 16 | 8,5 | 14 | 16,5 | 10 | 7 | 0,110 |
| **K0853.97112022** | 75 | 35 | 29 | 22 | 13 | 20 | 26,5 | 13,5 | 10 | 0,330 |
| **K0853.97116030** | 95 | 40 | 39 | 30 | 17 | 26 | 30 | 17,5 | 13 | 0,615 |

KIRÁLY TRADING KFT H-1151 Budapest Mogyoród útja 12 - 14 tel: 061307-3801 Email:pzoli@kiralytrading.hu

# Toe clamps compact

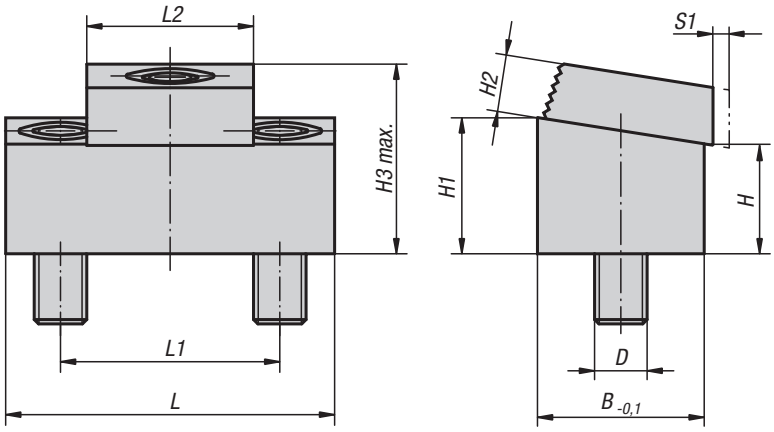


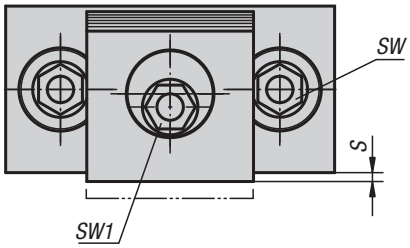


**Material:**
Steel.

**Version:**
Body tempered and black oxidised.
Square washer case-hardened and brass-plated.

**Sample order:**
K0036.10

**Note:**
This cam action compact toe clamp requires very little space to produce multi-fixture clamping.
Workpieces can be clamped in series by using the back side of a clamp as a stop for the next row.
Mount preferably in slots with B +0.05 mm. The height of the clamp can be adjusted by altering the slot depth.

Example of series clamping using compact toe clamps

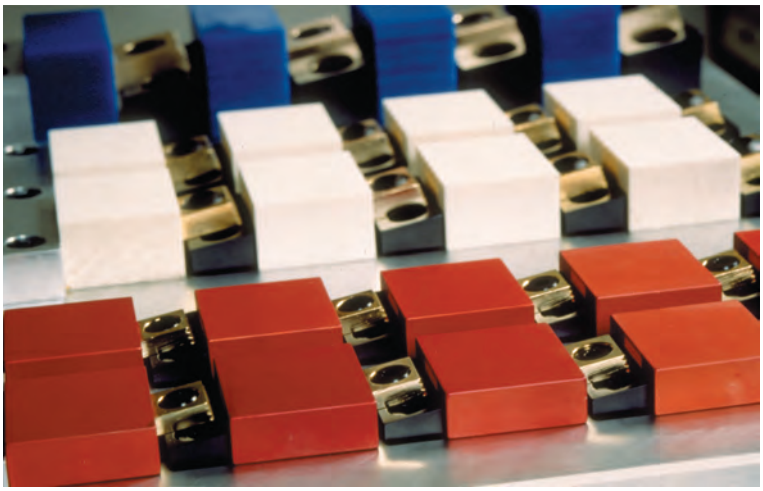

## KIPP Toe clamps compact

| Order No. | L | L1 | L2 | B | H | H1 | H2 | H3 max. | S | D | S1 (travel) | SW | SW1 | Clamping force kN | Tightening torque max. Nm |
|---|---|---|---|---|---|---|---|---|---|---|---|---|---|---|---|
| **K0036.08** | 43,2 | 25,4 | 19 | 19 | 12,7 | 15,7 | 6,4 | 21,4 | 1,5 | M8 | 1,6 | 5 | 7 | 8,9 | 28 |
| **K0036.10** | 54 | 33,5 | 25,4 | 25,4 | 11,4 | 15,4 | 9,7 | 24,5 | 1,8 | M10 | 2 | 7 | 8 | 17,8 | 88 |
| **K0036.12** | 75 | 50,8 | 38 | 38,1 | 25,5 | 31,5 | 13 | 43 | 2,05 | M12 | 2,5 | 10 | 12 | 26,7 | 135 |

# K0854

## Connecting blocks

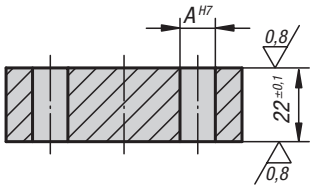


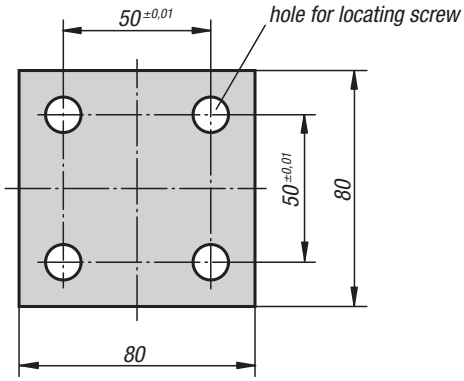

**Material:**
Carbon steel.

**Version:**
Black oxidised.
Contact faces ground.

**Sample order:**
K0854.40012050

**Note:**
When several tooling plates K0800 are used, connecting blocks are needed to maintain the correct grid hole pitch from one plate to the next. They are secured using 4 shoulder screws K0815.1....

### KIPP Connecting blocks

| Order No. | A | Suitable shoulder screw | Approx. weight kg |
|---|---|---|---|
| **K0854.40012050** | 12 | K0815.112055 | 1,020 |
| **K0854.40016050** | 16 | K0815.116065 | 1,205 |

# K0855

## Locating pins

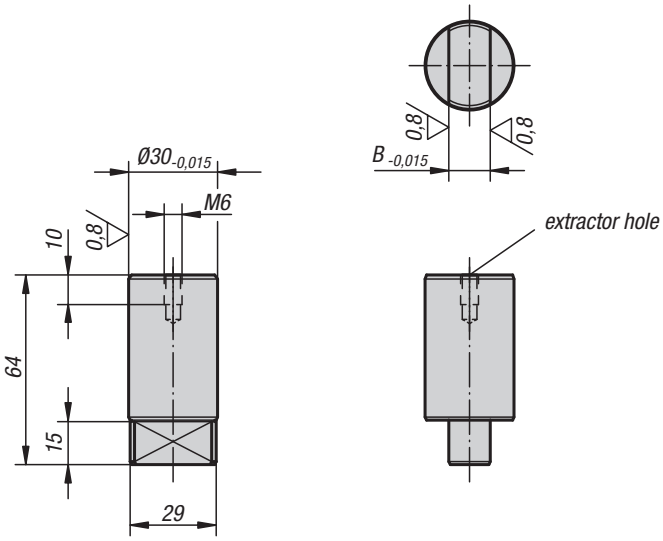

**Material:**
Carbon steel.

**Version:**
Tempered and black oxidised.
Precision diameters and guide faces ground.

**Sample order:**
K0855.12030

**Note:**
Locating pins are used for positioning grid plates K0800 on machine tables.

### KIPP Locating pins

| Order No. | B | Approx. weight kg |
|---|---|---|
| **K0855.12030** | 12 | 0,307 |
| **K0855.14030** | 14 | 0,313 |
| **K0855.18030** | 18 | 0,325 |
| **K0855.20030** | 20 | 0,330 |
| **K0855.22030** | 22 | 0,335 |

# K0856

## Centring pins

for central hole

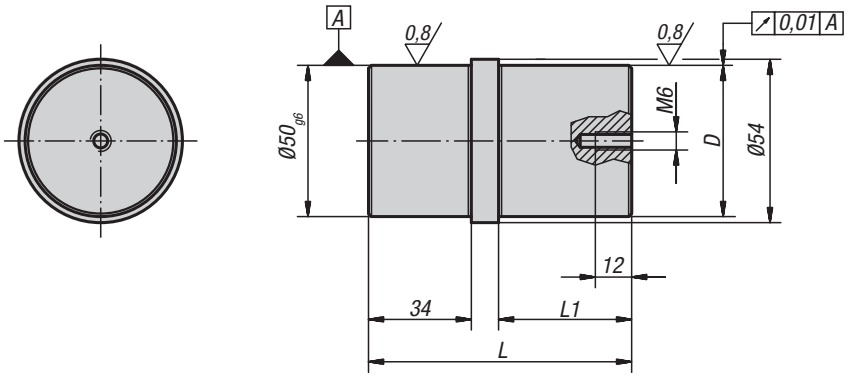

**Material:**
Steel.

**Version:**
Case-hardened;
fitting diameter ground

**Sample order:**
K0856.5025

**Note:**
Centring pins for central holes are suitable for basic elements K0806, K0802, K0803, K0804 and K0805.

### KIPP Centering pins for central hole

| Order No. | D | L | L1 |
|---|---|---|---|
| **K0856.5025** | 25 g6 | 77 | 34 |
| **K0856.5030** | 30 h6 | 87 | 44 |
| **K0856.5050** | 50 g6 | 87 | 44 |

# K0857

## Centring pins

for aligning hole

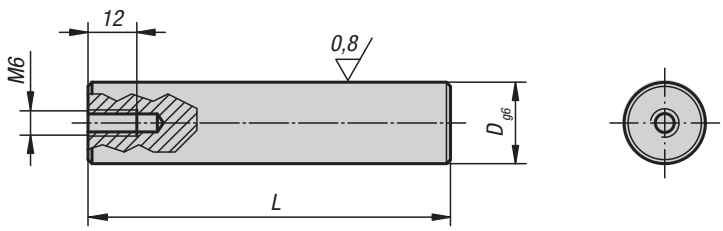

**Material:**
Steel.

**Version:**
Case-hardened;
fitting diameter ground

**Sample order:**
K0857.25125

**Note:**
Centring pins for aligning holes are suitable for basic elements K0802, K0803 and K0805.

### KIPP Centering pins for aligning hole

| Order No. | D | L |
|---|---|---|
| **K0857.20075** | 20 | 75 |
| **K0857.20089** | 20 | 89 |
| **K0857.25125** | 25 | 125 |

# K0858

## Centring pins

for aligning hole

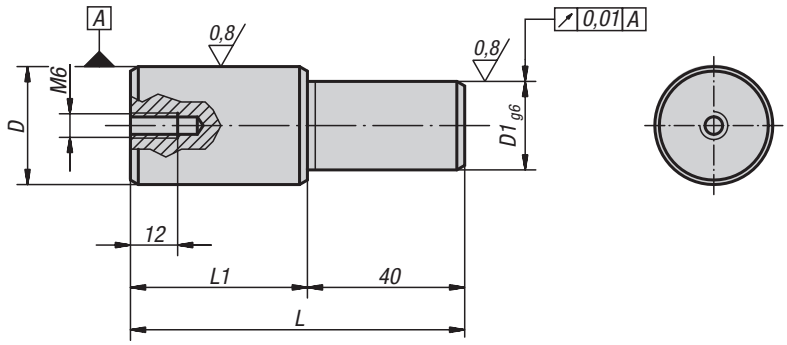

**Material:**
Steel.

**Version:**
Case-hardened.
Toleranced diameter ground.

**Sample order:**
K0858.2520

**Note:**
Centring pins for aligning holes are suitable for subplates K0806.

### KIPP Centering pins for aligning hole

| Order No. | D | D1 | L | L1 |
|---|---|---|---|---|
| **K0858.2520** | 25 g6 | 20 | 75 | 35 |
| **K0858.3020** | 30 h6 | 20 | 85 | 45 |
| **K0858.3025** | 30 h6 | 25 | 85 | 45 |

# K0859

## Clamp springs

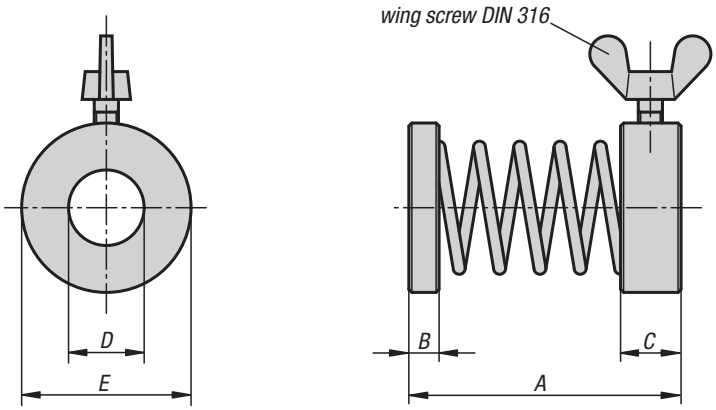

**Material:**
Thrust and retaining ring carbon steel, spring spring steel

**Version:**
Thrust and retaining ring black oxidised.
Spring bright.

**Sample order:**
K0859.12046

### KIPP Clamp springs

| Order No. | A | B | C | D | E | Wing nuts to DIN 316 |
|---|---|---|---|---|---|---|
| **K0859.08029** | 29 | 2 | 6 | 8,5 | 16 | M4x6 |
| **K0859.12046** | 46 | 3 | 8 | 13 | 25 | M4x10 |
| **K0859.16050** | 50 | 4 | 8 | 16,5 | 28 | M5x10 |

KIRÁLY TRADING KFT H-1151 Budapest Mogyoród útja 12 - 14 tel: 061307-3801 Email:pzoli@kiralytrading.hu

# Spacing washers

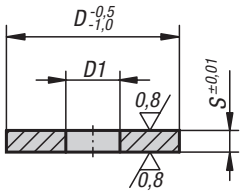


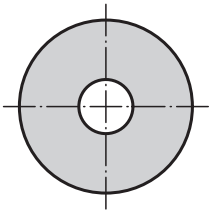

**Material:**
Carbon steel.

**Version:**
Tempered, black oxidised.
Contact faces ground.

**Sample order:**
K0860.16005

**Note:**
The spacing washer is used to alter the clamping range of hook clamps and hook holders. When a spacing washer is inserted between the base and the hook holder or riser cylinder it prevents damage to the support face.

application example:

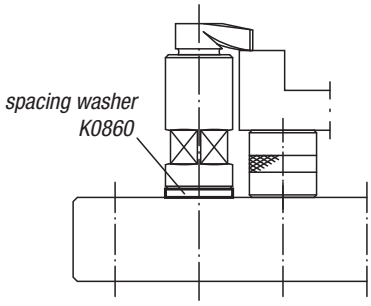


## KIPP Spacer washers, ground

| Order No. | D | D1 | S |
|---|---|---|---|
| K0860.08003 | 24 | 9 | 3 |
| K0860.08005 | 24 | 9 | 5 |
| K0860.08008 | 24 | 9 | 8 |
| K0860.12001 | 40 | 12,5 | 1 |
| K0860.12003 | 40 | 12,5 | 3 |
| K0860.12005 | 40 | 12,5 | 5 |
| K0860.16001 | 50 | 16,5 | 1 |
| K0860.16003 | 50 | 16,5 | 3 |
| K0860.16005 | 50 | 16,5 | 5 |
| K0860.16105 | 60 | 16,5 | 5 |

# K0861

## Locating bushings

for grid systems

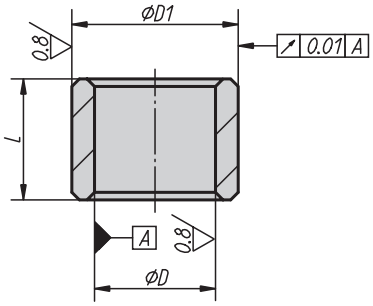


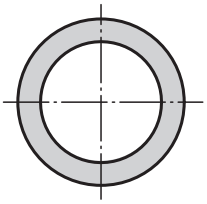

**Material:**
Special case-hardened steel

**Version:**
hardened and ground

**Sample order:**
K0861.01508305002

**Note:**
See next page for assembly instructions for changing locating bushings.

### KIPP Locating bushings for grid systems

| Order No. | D | D1 | L |
|---|---|---|---|
| **K0861.01508305002** | 12 H6 | 16 g5 | 8 |
| **K0861.01012304002** | 12 F7 | 18 g6 | 12 |
| **K0861.01016405002** | 16 F7 | 22 g6 | 16 |

# K0862

## Aluminium protection plugs

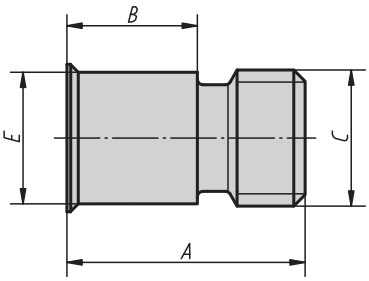


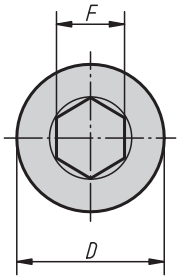


**Material:**
Aluminium.

**Version:**
Bright.

**Sample order:**
K0862.60108015

**Note:**
Use these plugs to seal grid holes and protect them from swarf and dirt.
Leave the protection plugs in holes not in use!
Aluminium plugs are used when aggressive coolants are used or when cutting dry.

### KIPP Aluminium protection plugs

| Order No. | A | B | C | D | E | F | Approx. weight kg |
|---|---|---|---|---|---|---|---|
| **K0862.60108015** | 15 | 7,5 | M8 | 12,6 | 11,8 | 5 | 0,003 |
| **K0862.60112021** | 21 | 11,5 | M12 | 13 | 11,6 | 6 | 0,005 |
| **K0862.60116026** | 26 | 15 | M16 | 17 | 15,6 | 8 | 0,011 |

KIRÁLY TRADING KFT H-1151 Budapest Mogyoród útja 12 - 14 tel: 061307-3801 Email:pzoli@kiralytrading.hu

# Threaded bushings

for grid systems

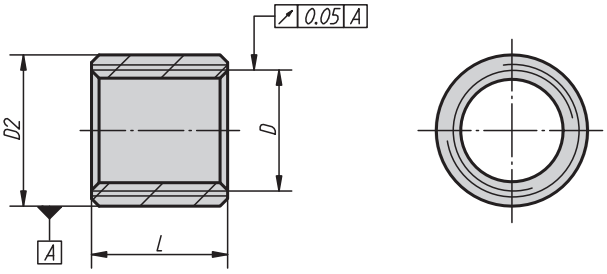


**Material:**
Carbon steel.

**Version:**
Tempered to 1100-1300 N/mm².

**Sample order:**
K0863.01508305003

**Note:**
Assembly instructions for changing threaded bushing.

Inserting the locating and threaded bushing

1. Remove grease from the locating and threaded bushing.
2. Apply adhesive (Loctite 638) in the hole.
3. Apply adhesive (Loctite 638) on the threaded bushing and screw in.
4. Apply adhesive (Loctite 638) to the locating bushing and insert it. If the locating bushing cannot be inserted by hand, please use an assembly tool as shown application example:.
5. Remove any adhesive pressed out by insertion of the locating and threaded bushing before it hardens.

Assembly instructions for locating and threaded bushes

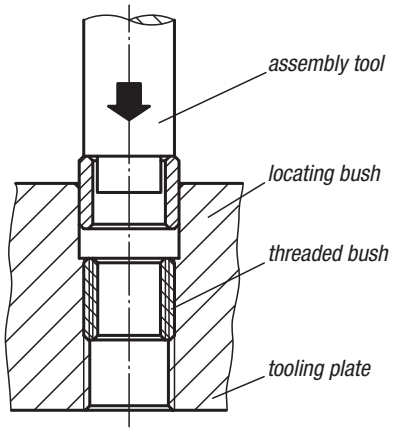


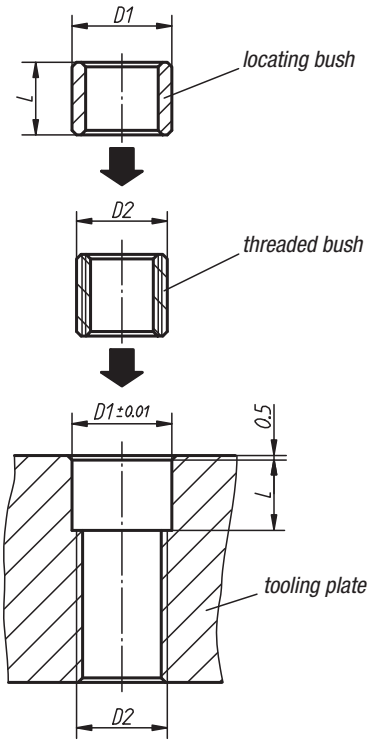


## KIPP Threaded bushings for grid systems

| Order No. | D | D2 | L | Approx. weight kg |
|---|---|---|---|---|
| **K0863.01508305003** | M8 | M12x1,75 | 12 | 0,004 |
| **K0863.01012304003** | M12 | M16x1,5 | 15 | 0,008 |
| **K0863.01016405003** | M16 | M20x1,5 | 18 | 0,013 |

# K0864

# Slot keys

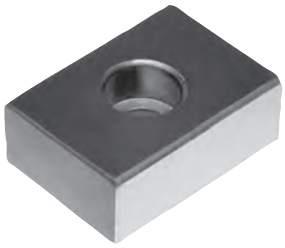

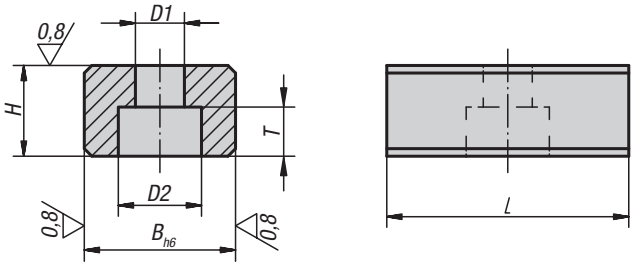


**Material:**
Steel.

**Version:**
Case-hardened, black oxidised and ground.

**Sample order:**
K0864.16

**Note:**
Slot keys are used to align fixtures and clamps on machine tables with DIN 650 T-slots. They are screwed into the fixture alignment slots. Slot keys are only used when the fixture and machine table have the same slot width.

application example:

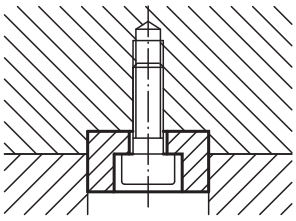

## KIPP Slot keys

| Order No. | B | H | L | D1 | D2 | T | for screws DIN 84 or 912 |
|---|---|---|---|---|---|---|---|
| **K0864.10** | 10 | 8 | 20 | 4,5 | 8 | 4,3 | M4x10 |
| **K0864.12** | 12 | 8 | 20 | 5,5 | 10 | 5,3 | M5x12 |
| **K0864.14** | 14 | 10 | 22 | 6,6 | 11 | 6,3 | M6x16 |
| **K0864.16** | 16 | 10 | 22 | 6,6 | 11 | 6,3 | M6x16 |
| **K0864.18** | 18 | 10 | 22 | 6,6 | 11 | 6,3 | M6x16 |
| **K0864.20** | 20 | 10 | 22 | 6,6 | 11 | 6,3 | M6x16 |
| **K0864.22** | 22 | 12 | 32 | 6,6 | 11 | 6,3 | M6x16 |

KIRÁLY TRADING KFT H-1151 Budapest Mogyoród útja 12 - 14 tel: 061307-3801 Email:pzoli@kiralytrading.hu

# T-slot keys

slot dimensions:

K0954.08x8

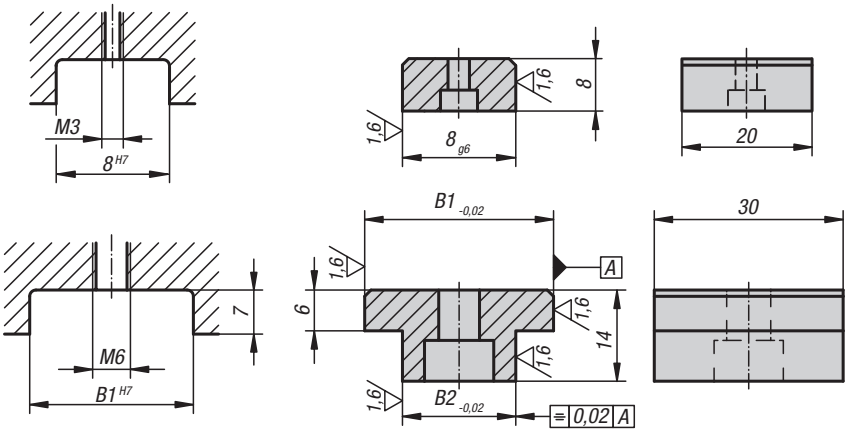


**Material:**
Carbon steel 1.1191

**Version:**
Black oxidised.

**Sample order:**
K0954.08X8 (include dimension B1)

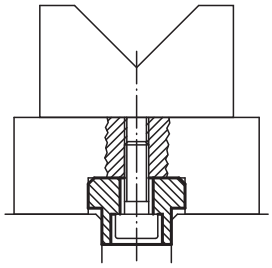

## KIPP T-slot keys

| Order No. | B1 | B2 |
|---|---|---|
| K0954.08X8 | 8 | 8 |
| K0954.12X20 | 20/22/30 | 12 |
| K0954.14X20 | 20/22/30 | 14 |
| K0954.16X20 | 20/22/30 | 16 |
| K0954.18X20 | 20/22/30 | 18 |
| K0954.22X20 | 20/22/30 | 22 |

KIRÁLY TRADING KFT H-1151 Budapest Mogyoród útja 12 - 14 tel: 061307-3801 Email:pzoli@kiralytrading.hu

# Nuts for T-slots

DIN 508 enhanced

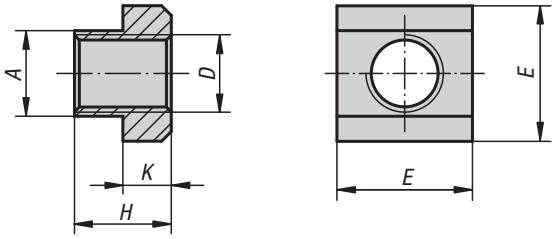


**Material:**
Carbon steel grade 10.

**Version:**
Steel black.

**Sample order:**
K0377.20

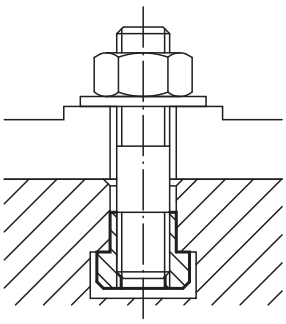

## KIPP Nuts for T-slots to DIN 508 enhanced

| Order No. | Nominal slot size | D | A | E | H | K |
|---|---|---|---|---|---|---|
| **K0377.06** | 8 | M6 | 7,6 | 13 | 10 | 6 |
| **K0377.08** | 10 | M8 | 9,6 | 15 | 12 | 6 |
| **K0377.10** | 12 | M10 | 11,5 | 18 | 14 | 7 |
| **K0377.12** | 14 | M12 | 13,5 | 22 | 16 | 8 |
| **K0377.16** | 18 | M16 | 17,5 | 28 | 20 | 10 |
| **K0377.18** | 20 | M18 | 19,6 | 32 | 24 | 12 |
| **K0377.20** | 22 | M20 | 21,6 | 35 | 28 | 14 |
| **K0377.22** | 24 | M22 | 23,6 | 40 | 32 | 16 |

KIRÁLY TRADING KFT H-1151 Budapest Mogyoród útja 12 - 14 tel: 061307-3801 Email:pzoli@kiralytrading.hu

# Studs

DIN 6379

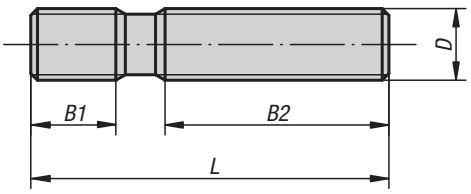

| Order No. | D | L | B1 | B2 |
|---|---|---|---|---|
| K0697.0632 | M6 | 32 | 9 | 16 |
| K0697.0640 | M6 | 40 | 9 | 20 |
| K0697.0650 | M6 | 50 | 9 | 30 |
| K0697.0663 | M6 | 63 | 9 | 40 |
| K0697.0680 | M6 | 80 | 9 | 50 |
| K0697.06100 | M6 | 100 | 9 | 63 |
| K0697.0840 | M8 | 40 | 11 | 20 |
| K0697.0863 | M8 | 63 | 11 | 40 |
| K0697.0880 | M8 | 80 | 11 | 50 |
| K0697.08100 | M8 | 100 | 11 | 63 |
| K0697.08125 | M8 | 125 | 11 | 75 |
| K0697.08160 | M8 | 160 | 11 | 100 |
| K0697.1050 | M10 | 50 | 13 | 25 |
| K0697.1080 | M10 | 80 | 13 | 50 |
| K0697.10100 | M10 | 100 | 13 | 75 |
| K0697.10125 | M10 | 125 | 13 | 75 |
| K0697.10160 | M10 | 160 | 13 | 100 |
| K0697.10200 | M10 | 200 | 13 | 125 |
| K0697.1250 | M12 | 50 | 15 | 25 |
| K0697.1263 | M12 | 63 | 15 | 32 |
| K0697.1280 | M12 | 80 | 15 | 50 |
| K0697.12100 | M12 | 100 | 15 | 63 |
| K0697.12125 | M12 | 125 | 15 | 75 |
| K0697.12160 | M12 | 160 | 15 | 100 |
| K0697.12200 | M12 | 200 | 15 | 125 |
| K0697.1463 | M14 | 63 | 17 | 32 |
| K0697.1480 | M14 | 80 | 17 | 50 |
| K0697.14100 | M14 | 100 | 17 | 63 |
| K0697.14125 | M14 | 125 | 17 | 75 |
| K0697.14160 | M14 | 160 | 17 | 100 |
| K0697.14200 | M14 | 200 | 17 | 125 |
| K0697.14250 | M14 | 250 | 17 | 160 |
| K0697.1663 | M16 | 63 | 19 | 32 |
| K0697.1680 | M16 | 80 | 19 | 50 |
| K0697.16100 | M16 | 100 | 19 | 63 |
| K0697.16125 | M16 | 125 | 19 | 75 |
| K0697.16160 | M16 | 160 | 19 | 100 |
| K0697.16200 | M16 | 200 | 19 | 125 |
| K0697.16250 | M16 | 250 | 19 | 160 |
| K0697.16315 | M16 | 315 | 19 | 180 |
| K0697.16350 | M16 | 350 | 19 | 200 |
| K0697.16500 | M16 | 500 | 20 | 315 |
| K0697.1880 | M18 | 80 | 23 | 50 |
| K0697.18125 | M18 | 125 | 23 | 75 |
| K0697.18160 | M18 | 160 | 23 | 100 |

**Material:**
Carbon steel.

**Version:**
Thread rolled.
M6-M12 tempered to 10.9, black.
M14-M36 tempered to 8.8, black.

**Sample order:**
K0697.12125

**Note:**
Permissible load: see Technical Information.

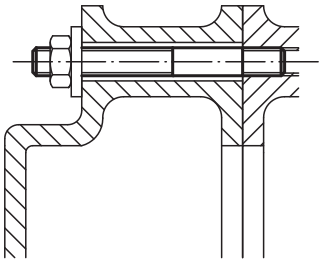

KIRÁLY TRADING KFT H-1151 Budapest Mogyoród útja 12 - 14 tel: 061307-3801 Email:pzoli@kiralytrading.hu

# Studs

DIN 6379

| Order No. | D | L | B1 | B2 |
|---|---|---|---|---|
| K0697.18200 | M18 | 200 | 23 | 125 |
| K0697.18250 | M18 | 250 | 23 | 150 |
| K0697.18315 | M18 | 315 | 23 | 180 |
| K0697.2080 | M20 | 80 | 27 | 32 |
| K0697.20125 | M20 | 125 | 27 | 70 |
| K0697.20160 | M20 | 160 | 27 | 100 |
| K0697.20200 | M20 | 200 | 27 | 125 |
| K0697.20250 | M20 | 250 | 27 | 160 |
| K0697.20315 | M20 | 315 | 27 | 200 |
| K0697.20400 | M20 | 400 | 27 | 250 |
| K0697.20500 | M20 | 500 | 27 | 315 |
| K0697.22100 | M22 | 100 | 31 | 45 |
| K0697.22160 | M22 | 160 | 31 | 100 |
| K0697.22200 | M22 | 200 | 31 | 125 |
| K0697.22250 | M22 | 250 | 31 | 160 |
| K0697.22315 | M22 | 315 | 31 | 180 |
| K0697.22400 | M22 | 400 | 31 | 250 |
| K0697.24100 | M24 | 100 | 35 | 45 |
| K0697.24125 | M24 | 125 | 35 | 63 |
| K0697.24160 | M24 | 160 | 35 | 100 |
| K0697.24200 | M24 | 200 | 35 | 125 |
| K0697.24250 | M24 | 250 | 35 | 160 |
| K0697.24315 | M24 | 315 | 35 | 200 |
| K0697.24400 | M24 | 400 | 35 | 250 |
| K0697.24500 | M24 | 500 | 35 | 315 |
| K0697.24630 | M24 | 630 | 35 | 315 |
| K0697.27125 | M27 | 125 | 39 | 56 |
| K0697.27200 | M27 | 200 | 39 | 125 |
| K0697.27315 | M27 | 315 | 39 | 200 |
| K0697.27400 | M27 | 400 | 39 | 250 |
| K0697.27500 | M27 | 500 | 39 | 315 |
| K0697.30125 | M30 | 125 | 43 | 56 |
| K0697.30200 | M30 | 200 | 43 | 125 |
| K0697.30315 | M30 | 315 | 43 | 200 |
| K0697.30500 | M30 | 500 | 43 | 315 |
| K0697.30700 | M30 | 700 | 43 | 400 |
| K0697.301000 | M30 | 1000 | 44 | 400 |
| K0697.36160 | M36 | 160 | 51 | 80 |
| K0697.36200 | M36 | 200 | 51 | 125 |
| K0697.36250 | M36 | 250 | 51 | 160 |
| K0697.36315 | M36 | 315 | 51 | 200 |
| K0697.36400 | M36 | 400 | 51 | 250 |
| K0697.36500 | M36 | 500 | 51 | 315 |
| K0697.36700 | M36 | 700 | 51 | 400 |

# K0865

## Extension nuts

height 3xD

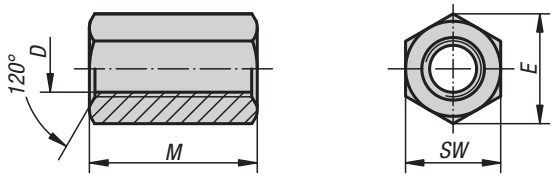

**Material:**
Carbon steel.

**Version:**
Tempered to 10, black.

**Sample order:**
K0865.16

**Note:**
For functional and safety reasons screws should be screwed into a maximum of half the nut height from both sides. Minimum thread depth 1x diameter.

**On request:**
DIN ISO 272 spanner sizes.

### KIPP Extension nuts height 3xD

| Order No. | D | M = 3 x D | SW | E |
|---|---|---|---|---|
| **K0865.06** | M6 | 18 | 10 | 11,5 |
| **K0865.08** | M8 | 24 | 13 | 15 |
| **K0865.10** | M10 | 30 | 17 | 19,6 |
| **K0865.12** | M12 | 36 | 19 | 21,9 |
| **K0865.16** | M16 | 48 | 24 | 27,7 |
| **K0865.20** | M20 | 60 | 30 | 34,6 |

# K0701

## Hexagon nuts with collar

height 1.5xD, DIN 6331 enhanced

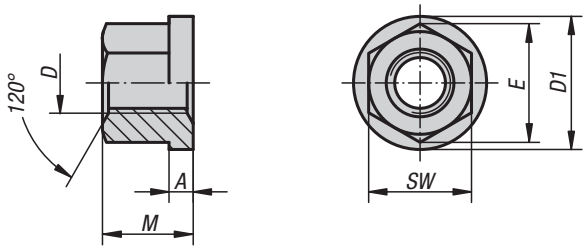

**Material:**
Carbon steel.

**Version:**
Steel grade 10, black.

**Sample order:**
K0701.16

### KIPP Hexagon nuts with collars, height 1.5xD, DIN 6331

| Order No. | Material | D | M = 1,5 x D | A | D1 | SW | E |
|---|---|---|---|---|---|---|---|
| **K0701.06** | steel | M6 | 9 | 3 | 14 | 10 | 11,5 |
| **K0701.08** | steel | M8 | 12 | 3,5 | 18 | 13 | 15 |
| **K0701.10** | steel | M10 | 15 | 4 | 22 | 16 | 18,5 |
| **K0701.12** | steel | M12 | 18 | 4 | 25 | 18 | 20,8 |
| **K0701.16** | steel | M16 | 24 | 5 | 31 | 24 | 27,7 |
| **K0701.20** | steel | M20 | 30 | 6 | 37 | 30 | 34,6 |

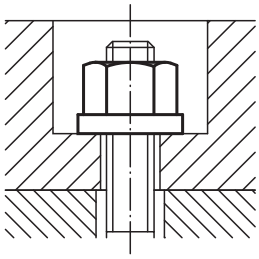

# K0702

## Hexagon nuts Form B

height 1.5xD, DIN 6330 enhanced

Form B
with spherical end one side

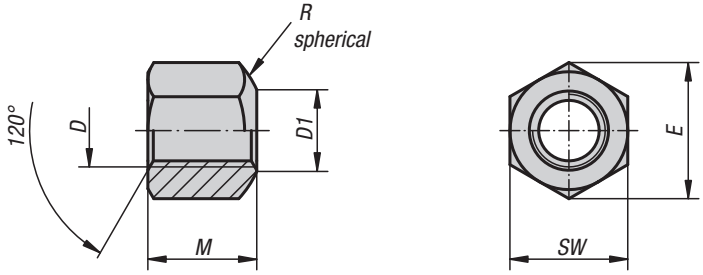


**Material:**
Carbon steel.

**Version:**
Tempered to 10, black.

**Sample order:**
K0702.12

**Note:**
These hexagon nuts can be used with the conical seats K0729, Form D and G.

### KIPP Hexagon nuts Form B, height 1.5xD, DIN 6330 enhanced

| Order No. | Material | D | M = 1,5 x D | D1 | SW | E | R |
|---|---|---|---|---|---|---|---|
| **K0702.06** | steel | M6 | 9 | 7 | 10 | 11,5 | 9 |
| **K0702.08** | steel | M8 | 12 | 9 | 13 | 15 | 11 |
| **K0702.10** | steel | M10 | 15 | 11,5 | 16 | 18,4 | 15 |
| **K0702.12** | steel | M12 | 18 | 14 | 18 | 20,7 | 17 |
| **K0702.16** | steel | M16 | 24 | 18 | 24 | 27,7 | 22 |
| **K0702.20** | steel | M20 | 30 | 22 | 30 | 34,6 | 27 |

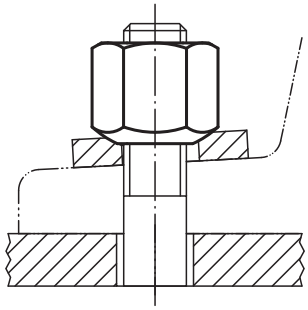

# K0867

## Washers for clamps

DIN 6340

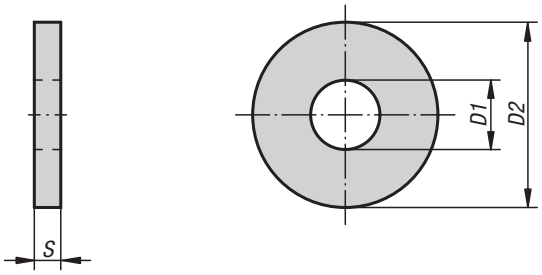


**Material:**
Steel.

**Version:**
Stamped, pressed flat and tempered to 1200-1400 N/mm², black.

**Sample order:**
K0867.16

### KIPP Clamp washers DIN 6340

| Order No. stamped steel | D1 | D2 | S | for screw |
|---|---|---|---|---|
| **K0867.06** | 6,4 | 17 | 3 | M6 |
| **K0867.08** | 8,4 | 23 | 4 | M8 |
| **K0867.10** | 10,5 | 28 | 4 | M10 |
| **K0867.12** | 13 | 35 | 5 | M12 |
| **K0867.16** | 17 | 45 | 6 | M16 |
| **K0867.20** | 21 | 50 | 6 | M20 |

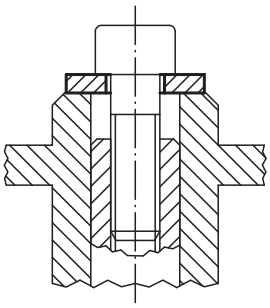

KIRÁLY TRADING KFT H-1151 Budapest Mogyoród útja 12 - 14 tel: 061307-3801 Email:pzoli@kiralytrading.hu

# C-washers

DIN 6372 enhanced

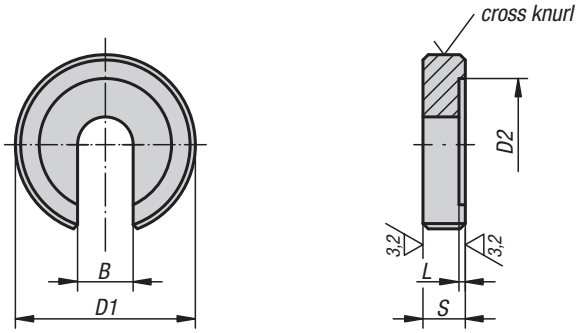


**Material:**
Carbon steel.

**Version:**
Tempered and black oxidised.

**Sample order:**
K0730.12

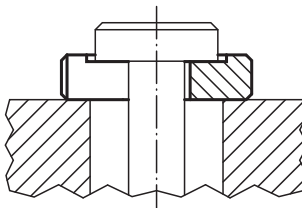

## KIPP C-washers DIN 6372

| Order No. | B | D1 | D2 | L | S |
|---|---|---|---|---|---|
| **K0730.05** | 5,25 | 17 | 12 | 0,75 | 5 |
| **K0730.06** | 6,4 | 22 | 16 | 0,8 | 6 |
| **K0730.08** | 8,4 | 28 | 21 | 1 | 7 |
| **K0730.10** | 10,5 | 34 | 25 | 1,2 | 8 |
| **K0730.12** | 13 | 40 | 30 | 1,8 | 9 |
| **K0730.14** | 14,5 | 48 | 33 | 1,8 | 12 |
| **K0730.16** | 17 | 56 | 37 | 1,8 | 12 |
| **K0730.20** | 21 | 64 | 45 | 2 | 14 |
| **K0730.24** | 25 | 75 | 52 | 2 | 16 |
| **K0730.30** | 31 | 90 | 65 | 2 | 18 |
| **K0730.36** | 37 | 100 | 75 | 2,5 | 20 |

KIRÁLY TRADING KFT H-1151 Budapest Mogyoród útja 12 - 14 tel: 061307-3801 Email:pzoli@kiralytrading.hu

# Washers

medium, DIN 125 Form A

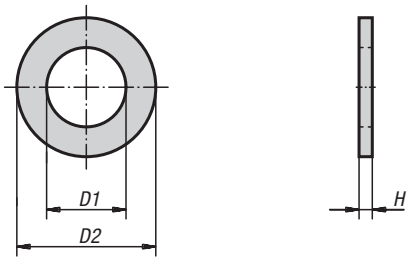


**Material:**
Steel 140 HV or stainless steel (A 2-70)

**Version:**
Bright.

**Sample order:**
K0868.10

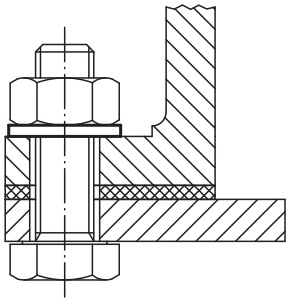

## KIPP Medium washers DIN 125 Form A

| Order No. steel | Order No. stainless steel | for screws | D1 | D2 | H |
|---|---|---|---|---|---|
| **K0868.03** | **K0868.103** | M3 | 3,2 | 7 | 0,5 |
| **K0868.04** | **K0868.104** | M4 | 4,3 | 9 | 0,8 |
| **K0868.05** | **K0868.105** | M5 | 5,3 | 10 | 1 |
| **K0868.06** | **K0868.106** | M6 | 6,4 | 12 | 1,6 |
| **K0868.08** | **K0868.108** | M8 | 8,4 | 16 | 1,6 |
| **K0868.10** | **K0868.110** | M10 | 10,5 | 20 | 2 |
| **K0868.12** | **K0868.112** | M12 | 13 | 24 | 2,5 |
| **K0868.14** | **K0868.114** | M14 | 15 | 28 | 2,5 |
| **K0868.16** | **K0868.116** | M16 | 17 | 30 | 3 |
| **K0868.20** | **K0868.120** | M20 | 21 | 37 | 3 |
| **K0868.24** | **K0868.124** | M24 | 25 | 44 | 4 |
| **K0868.30** | **K0868.130** | M30 | 31 | 56 | 4 |
| **K0868.36** | **K0868.136** | M36 | 37 | 66 | 5 |

# K0729

# Spherical washers

DIN 6319, 10/01

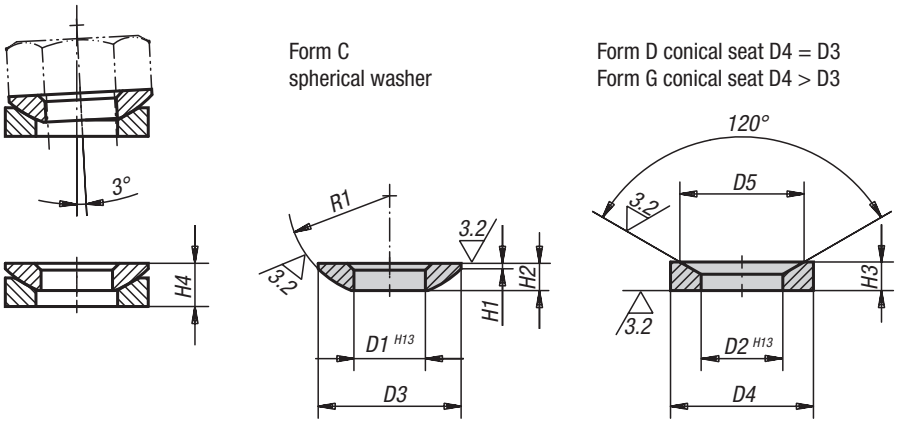


**Material:**
Mild steel or stainless steel.
Form G carbon steel tempered to HV 390 ±40.

**Version:**
Case-hardened.
Stainless steel not hardened, bright.

**Sample order:**
K0729.216

**Note:**
Conical seat Form G should be used over slots.

## KIPP Spherical washer Form C DIN 6319

| Order No. steel | Order No. stainless steel | Form | D1 | D3 | H1 | H2 | R1 | for screw Ø | Load rating max. kN (static load only) |
|---|---|---|---|---|---|---|---|---|---|
| **K0729.105** | - | C | 5,25 | 10,5 | 0,4 | 2 | 7,5 | 5 | - |
| **K0729.106** | **K0729.0106** | C | 6,4 | 12 | 0,7 | 2,3 | 9 | 6 | 9/6 |
| **K0729.108** | **K0729.0108** | C | 8,4 | 17 | 0,6 | 3,2 | 12 | 8 | 17/12 |
| **K0729.110** | **K0729.0110** | C | 10,5 | 21 | 0,8 | 4 | 15 | 10 | 26/16 |
| **K0729.112** | **K0729.0112** | C | 13 | 24 | 1,1 | 4,6 | 17 | 12 | 38/24 |
| **K0729.114** | - | C | 15 | 28 | 1,2 | 5 | 22 | 14 | 53 |
| **K0729.116** | **K0729.0116** | C | 17 | 30 | 1,3 | 5,3 | 22 | 16 | 73/45 |
| **K0729.120** | **K0729.0120** | C | 21 | 36 | 2 | 6,3 | 27 | 20 | 117/71 |
| **K0729.124** | **K0729.0124** | C | 25 | 44 | 2,4 | 8,2 | 32 | 24 | 168/105 |
| **K0729.130** | **K0729.0130** | C | 31 | 56 | 3,6 | 11,2 | 41 | 30 | 269/191 |
| **K0729.136** | **K0729.0136** | C | 37 | 68 | 4,6 | 14 | 50 | 36 | 394/- |
| **K0729.142** | **K0729.0142** | C | 43 | 78 | 6,5 | 17 | 58 | 42 | 542/- |
| **K0729.148** | **K0729.0148** | C | 50 | 92 | 8 | 21 | 67 | 48 | 714/- |
| **K0729.156** | - | C | 58 | 103 | 9,5 | 23 | 79 | 56 | - |
| **K0729.164** | - | C | 66 | 120 | 12 | 27 | 93 | 64 | - |

KIRÁLY TRADING KFT H-1151 Budapest Mogyoród útja 12 - 14 tel: 061307-3801 Email:pzoli@kiralytrading.hu

# Spherical washers

DIN 6319, 10/01

## KIPP Conical seats Forms D and G DIN 6319

| Order No. steel | Order No. stainless steel | Form | D2 | D4 | D5 | H3 | H4 with conical seat | for screw Ø | Load rating max. kN (static load only) |
|---|---|---|---|---|---|---|---|---|---|
| **K0729.205** | **-** | D | 6 | 10,5 | 9,25 | 2,1 | 3,1 | 5 | - |
| **K0729.206** | **K0729.0206** | D | 7,1 | 12 | 11 | 2,8 | 4 | 6 | 9/6 |
| **K0729.208** | **K0729.0208** | D | 9,6 | 17 | 14,5 | 3,5 | 5,6 | 8 | 17/12 |
| **K0729.210** | **K0729.0210** | D | 12 | 21 | 18,5 | 4,2 | 6,3 | 10 | 26/16 |
| **K0729.212** | **K0729.0212** | D | 14,2 | 24 | 20 | 5 | 8 | 12 | 38/24 |
| **K0729.214** | **-** | D | 16,5 | 28 | 24,8 | 5,6 | 8,2 | 14 | 53 |
| **K0729.216** | **K0729.0216** | D | 19 | 30 | 26 | 6,2 | 9,3 | 16 | 73/45 |
| **K0729.220** | **K0729.0220** | D | 23,2 | 36 | 31 | 7,5 | 11,6 | 20 | 117/71 |
| **K0729.224** | **K0729.0224** | D | 28 | 44 | 37 | 9,5 | 15 | 24 | 168/105 |
| **K0729.230** | **K0729.0230** | D | 35 | 56 | 49 | 12 | 18,9 | 30 | 269/191 |
| **K0729.236** | **K0729.0236** | D | 42 | 68 | 60 | 15 | 23,3 | 36 | 394/- |
| **K0729.242** | **K0729.0242** | D | 49 | 78 | 70 | 18 | 28,3 | 42 | 542/- |
| **K0729.248** | **K0729.0248** | D | 56 | 92 | 82 | 22 | 35,2 | 48 | 714/- |
| **K0729.256** | **-** | D | 65 | 103 | 92 | 25 | 39,7 | 56 | - |
| **K0729.264** | **-** | D | 75 | 120 | 110 | 30 | 46,5 | 64 | - |
| **K0729.305** | **-** | G | 6 | 15 | 9,25 | 2,5 | 3,5 | 5 | - |
| **K0729.306** | **K0729.0306** | G | 7,1 | 17 | 11 | 4 | 5,2 | 6 | 9/6 |
| **K0729.308** | **K0729.0308** | G | 9,6 | 24 | 14,5 | 5 | 6,8 | 8 | 17/12 |
| **K0729.310** | **K0729.0310** | G | 12 | 30 | 18,5 | 5 | 7,1 | 10 | 26/16 |
| **K0729.312** | **K0729.0312** | G | 14,2 | 36 | 20 | 6 | 9 | 12 | 38/24 |
| **K0729.314** | **-** | G | 16,5 | 40 | 24,8 | 6 | 8,6 | 14 | 53 |
| **K0729.316** | **K0729.0316** | G | 19 | 44 | 26 | 7 | 10,1 | 16 | 73/45 |
| **K0729.320** | **K0729.0320** | G | 23,2 | 50 | 31 | 8 | 12 | 20 | 117/71 |
| **K0729.324** | **K0729.0324** | G | 28 | 60 | 37 | 10 | 15,5 | 24 | 168/105 |
| **K0729.330** | **K0729.0330** | G | 35 | 68 | 49 | 12 | 18,7 | 30 | 269/191 |
| **K0729.336** | **-** | G | 42 | 80 | 60 | 12 | 20,3 | 36 | 394/- |

KIRÁLY TRADING KFT H-1151 Budapest Mogyoród útja 12 - 14 tel: 061307-3801 Email:pzoli@kiralytrading.hu

# Socket head screws

DIN 912 / DIN EN ISO 4762

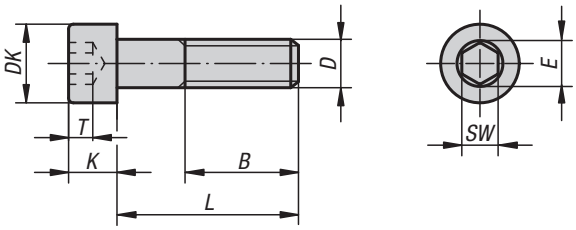


**Material:**
Steel or stainless steel (A 2)

**Version:**
Steel grade 8.8, black.
Stainless steel A 2-70, bright.

**Sample order:**
K0869.08X40 (include length L)

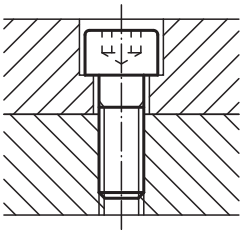

## KIPP Socket head screws DIN 912 / DIN EN ISO 4762

| Order No. steel | Order No. stainless steel | D | L | B | DK | K | E | SW | T |
|---|---|---|---|---|---|---|---|---|---|
| **K0869.04X** | **K0869.104X** | M4 | 10/12/16/18/20/25 | 20 | 7 | 4 | 3,44 | 3 | 2 |
| **K0869.05X** | **K0869.105X** | M5 | 10/12/16/18/20/25/30/40 | 22 | 8,5 | 5 | 4,58 | 4 | 2,5 |
| **K0869.06X** | **K0869.106X** | M6 | 10/12/16/18/20/25/30/35/40/45/50/55/60 | 24 | 10 | 6 | 5,72 | 5 | 3 |
| **K0869.08X** | **K0869.108X** | M8 | 16/18/20/25/30/35/40/45/50/60/70/80 | 28 | 13 | 8 | 6,86 | 6 | 4 |
| **K0869.10X** | **K0869.110X** | M10 | 16/18/20/25/30/35/40/45/50/60/70/80/90/100 | 32 | 16 | 10 | 9,15 | 8 | 5 |
| **K0869.12X** | **K0869.112X** | M12 | 20/25/30/35/40/45/50/60/70/80/90/100/110/120 | 36 | 18 | 12 | 11,43 | 10 | 6 |
| **K0869.14X** | **-** | M14 | 50/80/120 | 40 | 21 | 14 | 13,9 | 12 | 7 |
| **K0869.16X** | **-** | M16 | 30/35/40/45/50/60/70/80/90/100/110/120 | 44 | 24 | 16 | 16 | 14 | 8 |
| **K0869.20X** | **-** | M20 | 40/45/50/60/70/80/90/100/110/120 | 52 | 30 | 20 | 19,44 | 17 | 10 |

# K0870

## Hexagon head bolts

DIN EN ISO 4014 / DIN EN 24014

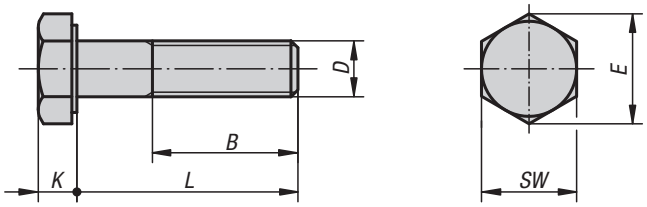

**Material:**
Steel or stainless steel (A 2)

**Version:**
Steel grade 8.8, black.
Stainless steel A 2-70, bright.

**Sample order:**
K0870.110X50 (include length L)

**Note:**
The versions K0870.105X25 and K0870.105X45 are not available in stainless steel.

### KIPP Hexagon head bolts with shaft DIN 931/ DIN EN ISO 4014/DIN EN 24014

| Order No. steel | Order No. stainless steel | D | L | B | SW | E | K |
|---|---|---|---|---|---|---|---|
| **K0870.04X** | - | M4 | 25/30/35/40/45/50 | 14 | 7 | 7,66 | 2,8 |
| **K0870.05X** | **K0870.105X** | M5 | 25/30/35/40/45/50/60 | 16 | 8 | 8,79 | 3,5 |
| **K0870.06X** | **K0870.106X** | M6 | 30/35/40/45/50/60/70 | 18 | 10 | 11,05 | 4 |
| **K0870.08X** | **K0870.108X** | M8 | 35/40/45/50/60/70/80 | 22 | 13 | 14,38 | 5,3 |
| **K0870.10X** | **K0870.110X** | M10 | 40/45/50/60/70/80/90/100 | 26 | 17 | 18,9 | 6,4 |
| **K0870.12X** | **K0870.112X** | M12 | 45/50/60/70/80/90/100/110/120 | 30 | 19 | 21,1 | 7,5 |
| **K0870.16X** | **K0870.116X** | M16 | 60/70/80/90/100/110/120 | 38 | 24 | 26,75 | 10 |
| **K0870.20X** | - | M20 | 70/80/90/100/110/120 | 46 | 30 | 33,53 | 12,5 |

# K0871

## Hexagon head bolts

full thread DIN 933

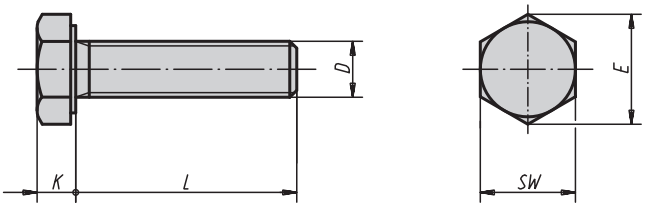

**Material:**
Steel.

**Version:**
Grade 8.8, black.

**Sample order:**
K0871.06X20 (include length L)

### KIPP Hexagon head bolts DIN 933

| Order No. | D | L | K | SW | E |
|---|---|---|---|---|---|
| **K0871.06X** | M6 | 20/25/30/40/50/60 | 4 | 10 | 11,05 |
| **K0871.08X** | M8 | 16/20/25/30/35/40 | 5,3 | 13 | 14,38 |
| **K0871.10X** | M10 | 30/40/50/60/80/100 | 6,4 | 17 | 18,9 |
| **K0871.12X** | M12 | 30/40 | 7,5 | 19 | 21,1 |
| **K0871.16X** | M16 | 40/50 | 10 | 24 | 26,75 |

# C-washers

swing, with shoulder screw

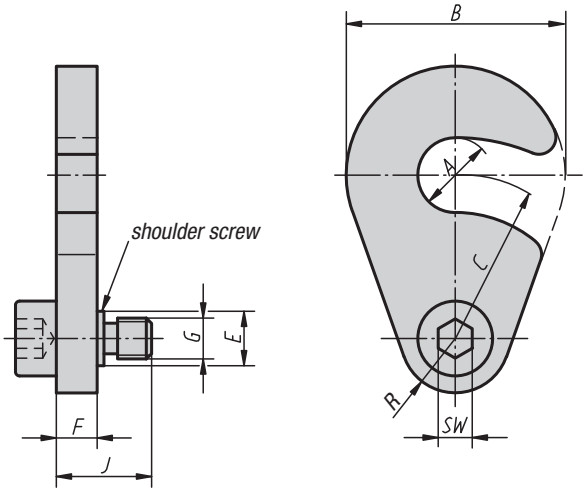


**Material, version:**
Swing C-washer mild steel, case-hardened and black oxidised.
Collar screw carbon steel, tempered and black oxidised.

**Sample order:**
K0872.90010

## KIPP C-washers swing, with shoulder screw

| Order No. | A | B | C | D | E | F | G | SW | J | Approx. weight kg |
|---|---|---|---|---|---|---|---|---|---|---|
| **K0872.90010** | 11 | 32 | 24 | 8 | 8 | 6 | M6 | 5 | 14 | 0,047 |
| **K0872.90012** | 13,5 | 40 | 27 | 10 | 10 | 8 | M8 | 6 | 19 | 0,09 |
| **K0872.90016** | 18 | 50 | 33 | 10 | 10 | 8 | M8 | 6 | 19 | 0,125 |

KIRÁLY TRADING KFT H-1151 Budapest Mogyoród útja 12 - 14 tel: 061307-3801 Email:pzoli@kiralytrading.hu

# Extractor

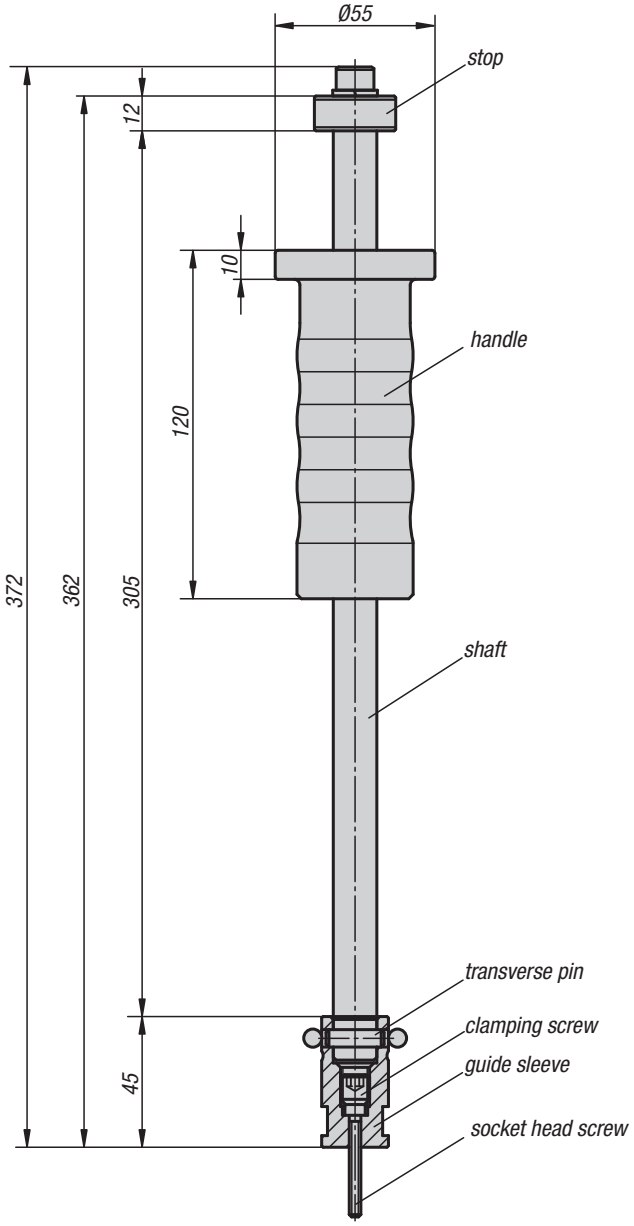

**Material:**
Hammer head carbon steel.
Shaft, stop and guide sleeves tool steel.

**Version:**
Hammer head tempered and chromed.
Shaft, stop and guide sleeve hardened and chromed.

**Sample order:**
K0873.40

**Note:**
These extractors are used to remove locating pins and centring pins (K0817, K0818, K0350, K0351) with M3 - M8 taps.

**Accessories:**
Storage box for guide sleeves.

1 set of guide sleeves

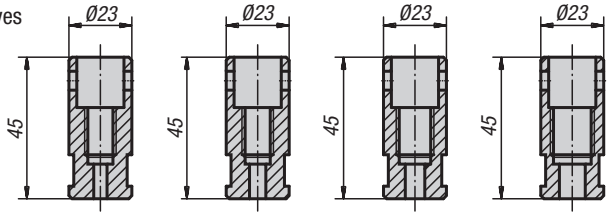


## KIPP Extractor

| Order No. | Dimensions |
|---|---|
| K0873.40 | see drawing |

KIRÁLY TRADING KFT H-1151 Budapest Mogyoród útja 12 - 14 tel: 061307-3801 Email:pzoli@kiralytrading.hu

# Mineral cast system

# KIPPblock

## Mineral cast cube tombstone

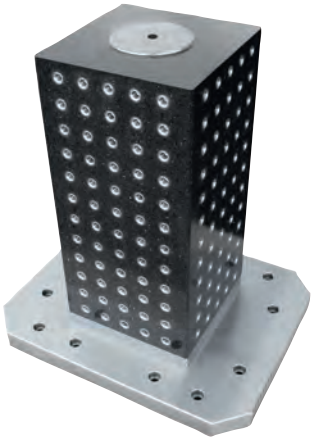

## ADVANTAGES:

- Outstanding absorption properties, 6-10 times better than grey cast iron
- Very low specific weight, lighter than aluminium
- Low heat conductivity
- Chemically and mechanically resistant to aggressive and abrasive media
- Design freedom with regard to shaping
- Increased service life of the cutting tools by up to 30%
- No corrosion
- Integration of machine elements, such as load anchors, air or hydraulic connections
- Appealing surface. No painting required

## Mineral cast cube tombstone with stainless steel jacket

## Mineral cast cube tombstone with zero point clamping system

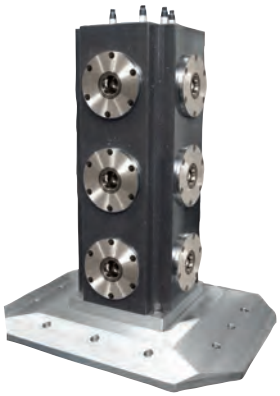

## Mineral cast cross tombstone

## Mineral cast plates

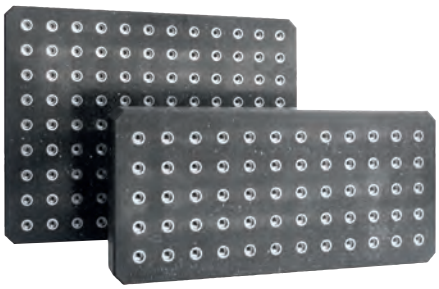

# Notes

# Multi-clamping system

# Multi-clamping system

The multi-clamping system is used to clamp diverse workpieces on a base plate or directly on a machine table. The various elements of the multi-clamping system (base rails, stops and wedge clamps) allow workpieces of varied sizes to be held without difficulty. The serrations on the base rail guarantee a secure and exact fastening of the stops. The working area of a machine can be more effectively used by mounting a number of base rails along and across the work surface. The wedge clamps allow two workpieces to be held simultaneously from one clamping point. The transverse wedge design works in the vertical and horizontal plane, guaranteeing a secure hold in all directions. As the clamp is tightened the wedge jaws expand pressing the workpiece against the stops.

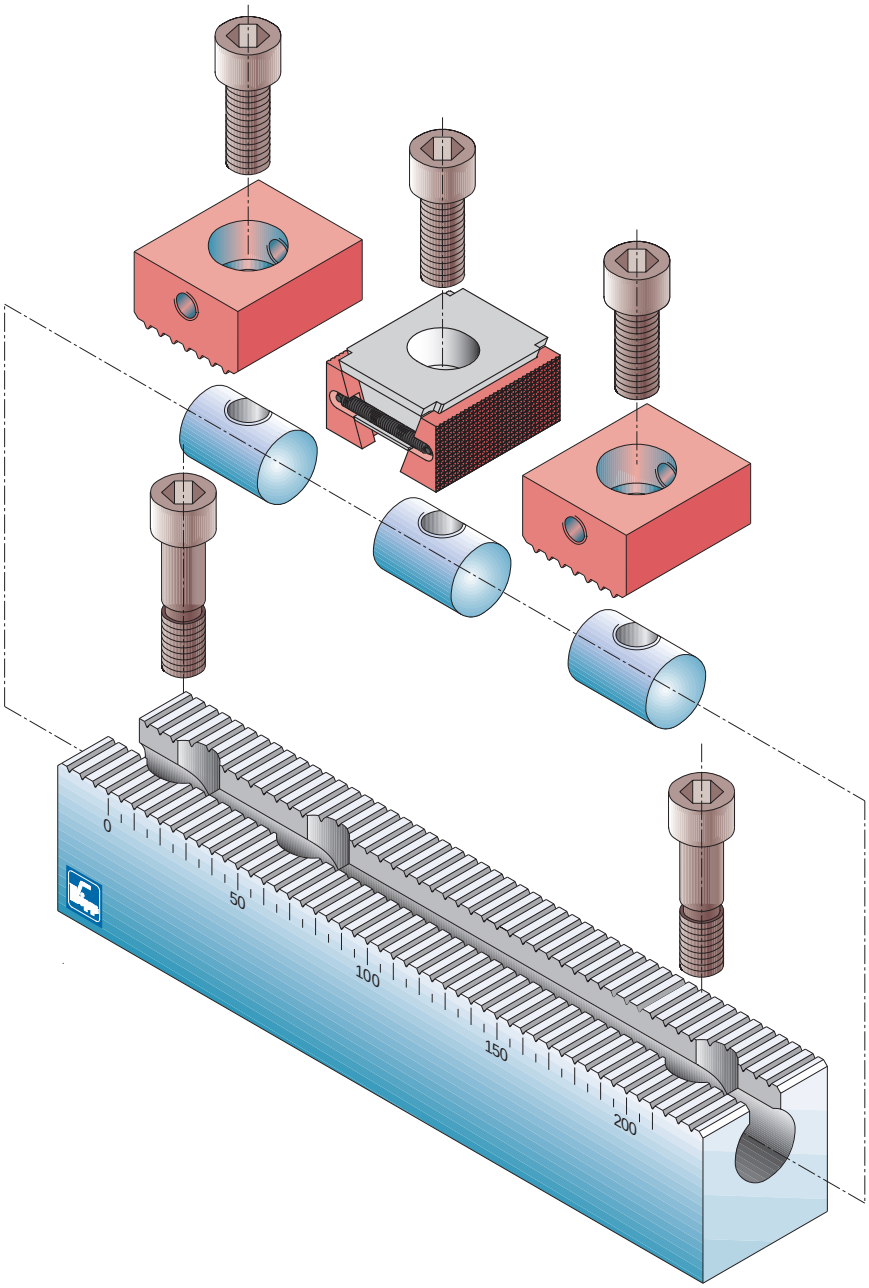

K0902

# Multi-clamping system

hard stops

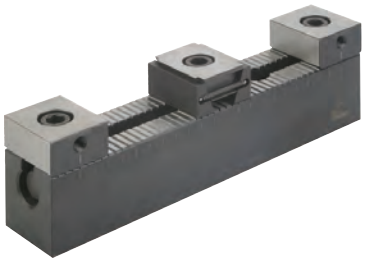

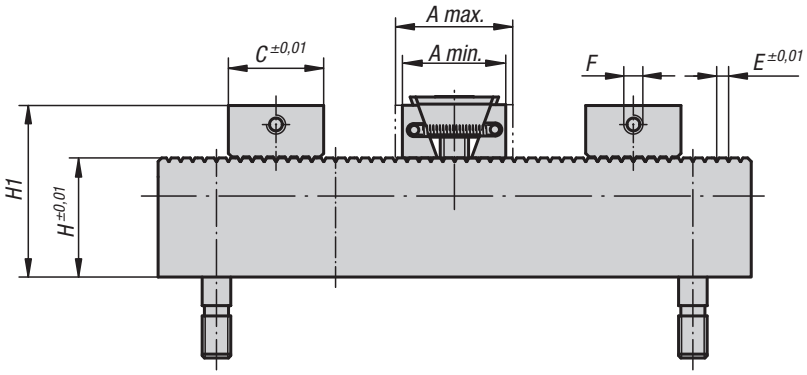


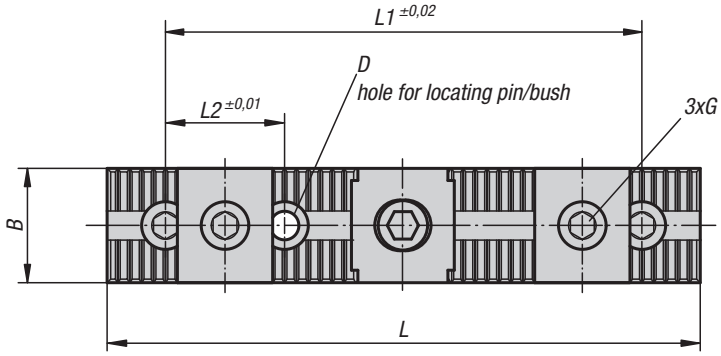


**Material:**
Base rail, stops and wedge clamp carbon steel.

**Version:**
Serrations case hardened and ground.
Stops tempered.
Clamping jaws hardened and black oxidised.

**Sample order:**
K0902.12

## KIPP Multi-clamping system hard stops

| Order No. | A min. | A max. | B | C | D | E | F | G Socket head screw DIN 912 | H | H1 | L | L1 | L2 | Clamping force approx. kN |
|---|---|---|---|---|---|---|---|---|---|---|---|---|---|---|
| **K0902.08** | 30,5 | 33,5 | 24 | 25 | 12 H6 | 2,5 | M5 | M8x25 | 40 | 55 | 199 | 150 | 50 | 15 |
| **K0902.12** | 44 | 49,5 | 48 | 40 | 12 F7 | 5 | M8 | M12x30 | 50 | 72 | 249 | 200 | 50 | 30 |
| **K0902.16** | 55 | 62 | 48 | 40 | 16 F7 | 5 | M8 | M16x40 | 63 | 92 | 249 | 200 | 50 | 50 |

# Multi-clamping system

soft stops

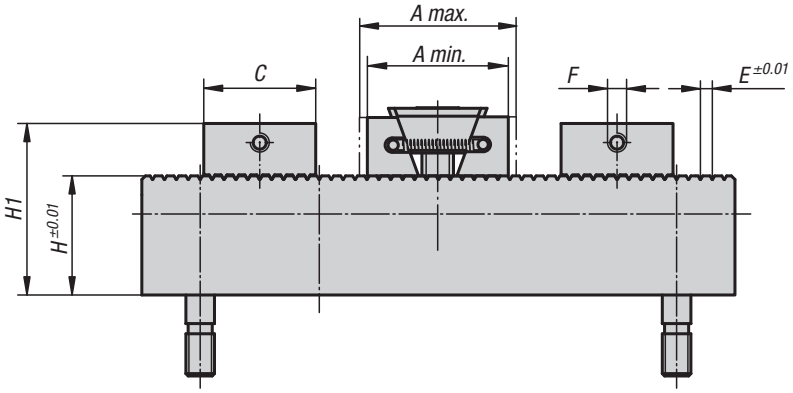


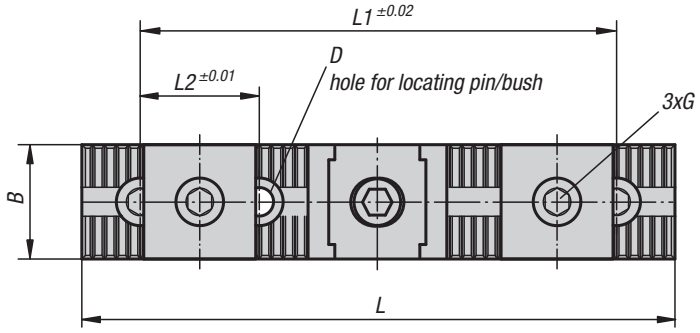


**Material:**
Base rail, stops and wedge clamp carbon steel.

**Version:**
Serrations case hardened and ground.
Clamping jaws hardened and black oxidised.

**Sample order:**
K0903.12

**Note:**
Depending on the size the clamping jaws have 3 mm (K0903.08) or 5 mm (K0903.12, K0903.16) machining allowance per jaw.

## KIPP Multi-clamping system, soft stops

| Order No. | A min. | A max. | B | C | D | E | F | G Socket head screw DIN 912 | H | H1 | L | L1 | L2 | Clamping force approx. kN |
|---|---|---|---|---|---|---|---|---|---|---|---|---|---|---|
| **K0903.08** | 36,5 | 39,5 | 24 | 31 | 12 H6 | 2,5 | M5 | M8x25 | 40 | 55 | 199 | 150 | 50 | 11 |
| **K0903.12** | 54 | 59,5 | 48 | 50 | 12 F7 | 5 | M8 | M12x30 | 50 | 72 | 249 | 200 | 50 | 23 |
| **K0903.16** | 65 | 72 | 48 | 50 | 16 F7 | 5 | M8 | M16x40 | 63 | 92 | 249 | 200 | 50 | 38 |

KIRÁLY TRADING KFT H-1151 Budapest Mogyoród útja 12 - 14 tel: 061307-3801 Email:pzoli@kiralytrading.hu

# Base rails

**Material:**
Carbon steel 1.0503.

**Version:**
Black oxidised.
Serrations case hardened and ground.

**Sample order:**
K0904.5000801

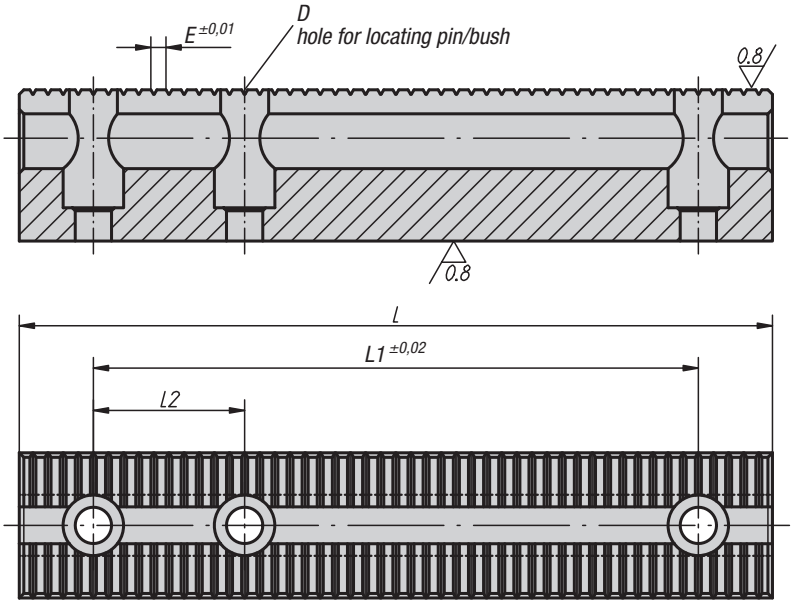


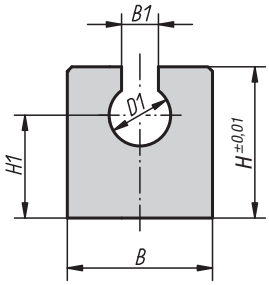


K0904.5021201

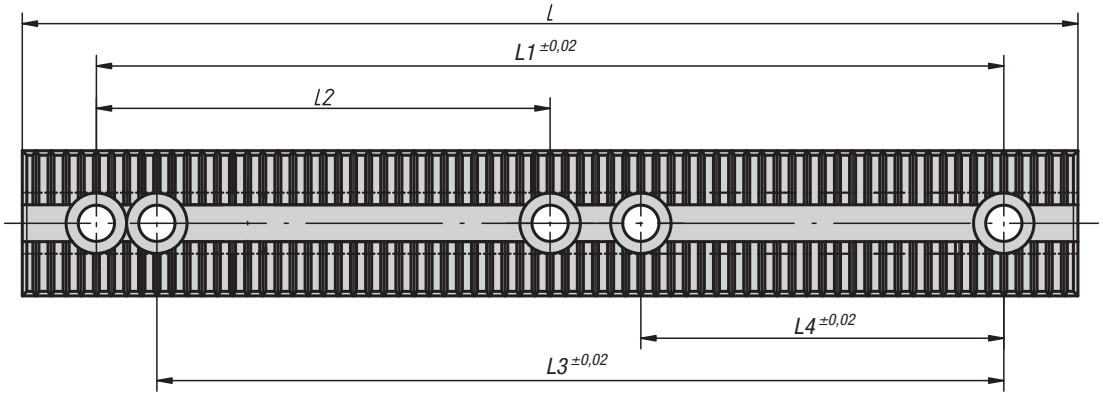


## KIPP Base rails

| Order No. | B | B1 | D | D1 | E | H | H1 | L | L1 | L2 | L3 | L4 | Approx. weight kg |
|---|---|---|---|---|---|---|---|---|---|---|---|---|---|
| **K0904.5000801** | 24 | 8,2 | 12 H6 | 14,2 | 2,5 | 40 | 25 | 199 | 150 | 50 ±0,01 | - | - | 1,040 |
| **K0904.5001201** | 48 | 12,2 | 12 F7 | 20,2 | 5 | 50 | 34 | 249 | 200 | 50 ±0,01 | - | - | 3,700 |
| **K0904.5021201** | 48 | 12,2 | 12 F7 | 20,2 | 5 | 50 | 34 | 349 | 300 | 150 ±0,02 | 280 | 120 | 5,200 |
| **K0904.5001601** | 48 | 16,2 | 16 F7 | 24,2 | 5 | 63 | 43 | 249 | 200 | 50 ±0,01 | - | - | 5,100 |

KIRÁLY TRADING KFT H-1151 Budapest Mogyoród útja 12 - 14 tel: 061307-3801 Email:pzoli@kiralytrading.hu

# Stops

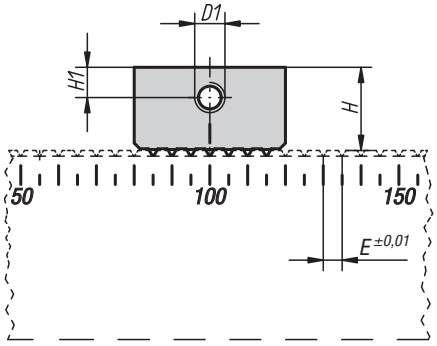


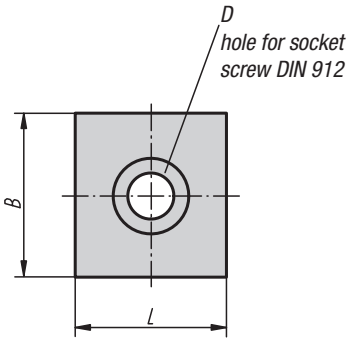


**Material:**
Carbon steel 1.0503.

**Version:**
Hard stop:
Tempered to 1200-1400 N/mm², black oxidised.
Serrations and stop faces ground, bright.

Soft stop:
Hardness HRC 30, black oxidised. Serrations case hardened and ground, bright.

**Sample order:**
K0905.5000802

## KIPP Stops

| Order No. | Version | B | D | D1 | E | H | H1 | L | Approx. weight kg |
|---|---|---|---|---|---|---|---|---|---|
| **K0905.5000802** | Stop hard | 24 | M8x25 | M5 | 2,5 | 15 | 6 | 25 ±0,01 | 0,054 |
| **K0905.5001202** | Stop hard | 48 | M12x30 | M8 | 5 | 22 | 8 | 40 ±0,01 | 0,279 |
| **K0905.5001602** | Stop hard | 48 | M16x40 | M8 | 5 | 29 | 12,5 | 40 ±0,01 | 0,363 |
| **K0905.5100802** | Stop soft | 24 | M8x25 | M5 | 2,5 | 15 | 6 | 31 ±0,1 | 0,071 |
| **K0905.5101202** | Stop soft | 48 | M12x30 | M8 | 5 | 22 | 8 | 50 ±0,1 | 0,335 |
| **K0905.5101602** | Stop soft | 48 | M16x40 | M8 | 5 | 29 | 12,5 | 50 ±0,1 | 0,446 |

# K0905

# Stop

carbide-coated and serrated

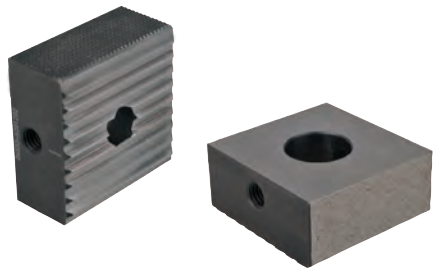

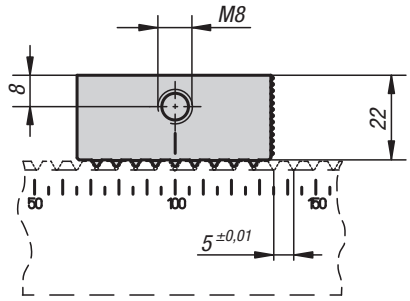


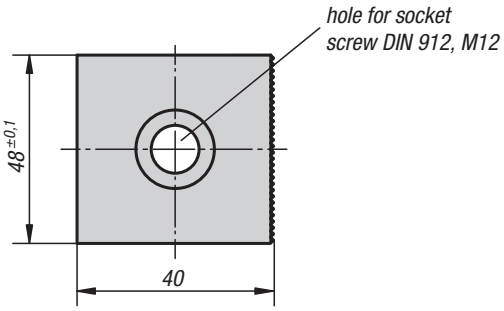


**Material:**
Carbon steel 1.0503.

**Version:**
Hard stop.
Hardened to 58 +/2 HRC.
Serrations ground, bright.

**Sample order:**
K0905.5201202

**Note:**
One stop face is serrated, the other side is carbide-coated.

## KIPP Stop, carbide-coated and serrated

| Order No. | Approx. weight kg |
|---|---|
| K0905.5201202 | 0,28 |

# K0906

## Stop prism

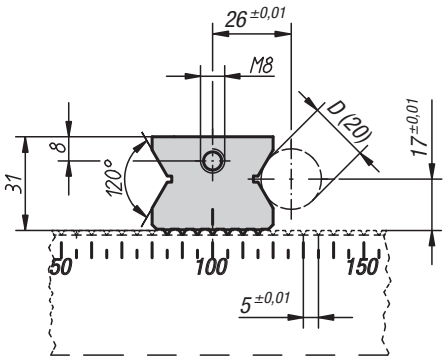


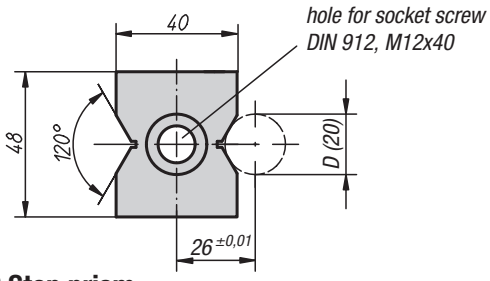

**Material:**
Carbon steel 1.0503.

**Version:**
Prism tempered to 1200-1400 N/mm², black oxidised.
Serrations and prism ground, bright.

**Sample order:**
K0906.5001265

### KIPP Stop prism

| Order No. | D<br>min. - max. | Approx.<br>weight<br>kg |
|---|---|---|
| **K0906.5001265** | 5 - 33 | 0,358 |

# K0907

## Stop with positive down force

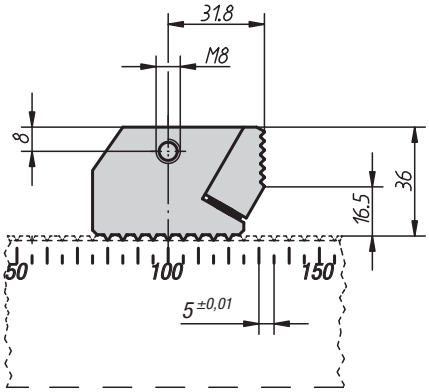


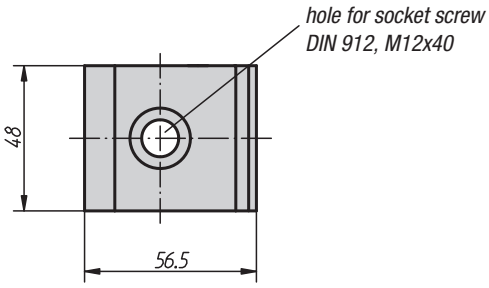


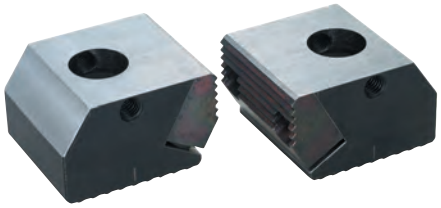

**Material:**
Stop and jaw 1.0503

**Version:**
Stop and jaw tempered to 1200-1400 N/mm², black oxidised.
Serrations ground, bright.

**Sample order:**
K0907.5001273

### KIPP Stop with positive down force

| Order No. | Approx.<br>weight<br>kg |
|---|---|
| **K0907.5001273** | 0,558 |

# K0908

## Seating ledges

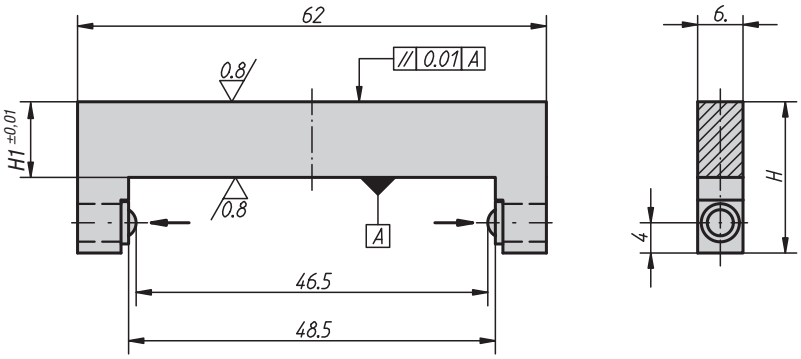

**Material:**
Steel.

**Version:**
Ledges hardened, black oxidised.
Contact faces ground, bright.

**Sample order:**
K0908.5001295

### KIPP Seating ledges

| Order No. | H | H1 | Approx. weight kg |
|---|---|---|---|
| K0908.5001295 | 20 | 10 | 0,033 |
| K0908.5001298 | 27 | 17 | 0,054 |

# K0909

## Keyway nuts round

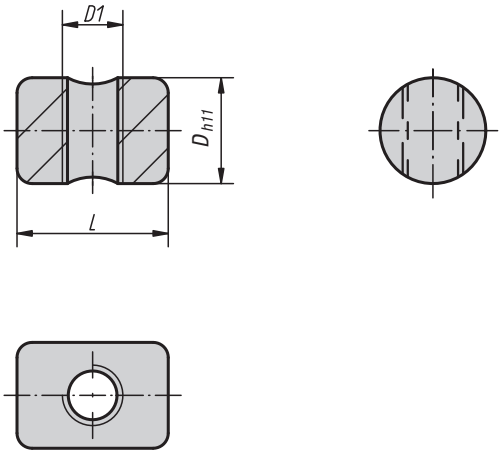

**Material:**
Steel.

**Version:**
Black oxidised.

**Sample order:**
K0909.0802

### KIPP Keyway nuts round

| Order No. | D | D1 | L |
|---|---|---|---|
| K0909.0802 | 14 | M8 | 20 |
| K0909.1202 | 20 | M12 | 30 |
| K0909.1602 | 24 | M16 | 35 |

KIRÁLY TRADING KFT H-1151 Budapest Mogyoród útja 12 - 14 tel: 061307-3801 Email:pzoli@kiralytrading.hu

# Wedge clamps

jaw face smooth or serrated

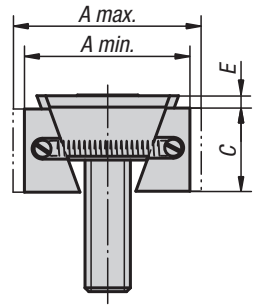


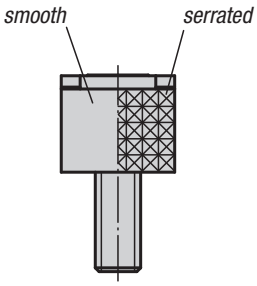


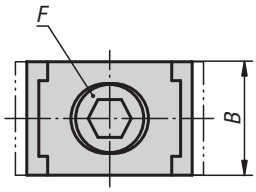


**Material:**
Wedge and jaw segments carbon steel.

**Version:**
Wedge and jaw segments hardened, black.

**Sample order:**
K0039.2208

**Note:**
The functioning principle make the wedge clamps ideal for series clamping. The wedge form can exert high clamping forces.
These wedge clamps can be mounted in grid holes or T-slots. Tightening the socket screw moves the wedge down and the jaws out pressing the workpieces against the fixtures fixed stops.
The wedge has a slightly elongated hole allowing for movement to compensate for tolerances.

Spread width:
M8 = ±0.5 mm
M10 = ±1.0 mm
M12 = ±1.0 mm
M16 = ±1.5 mm

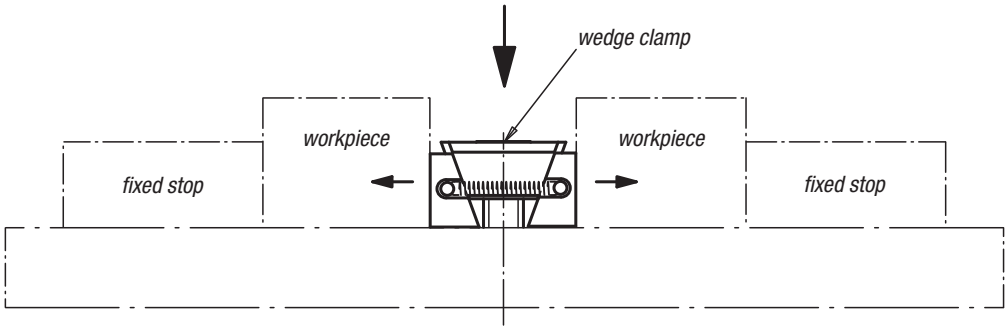


## KIPP Wedge clamps, narrow version

| Order No. jaw face smooth | Order No. jaw face serrated | A min. | A max. | B | C | E | F Socket head screw DIN 6912 | Clamping force kN | Tightening torque Nm |
|---|---|---|---|---|---|---|---|---|---|
| **K0039.1108** | **K0039.2108** | 30,5 | 33,5 | 24 | 15 | 2 | M8x25 | 15 | 25 |
| **K0039.1110** | **K0039.2110** | 32 | 37 | 28 | 19 | 3,5 | M10x25 | 20 | 49 |
| **K0039.1112** | **K0039.2112** | 44 | 49,5 | 30 | 22 | 3,5 | M12x40 | 30 | 85 |
| **K0039.1116** | **K0039.2116** | 55 | 62 | 40 | 29 | 4 | M16x60 | 50 | 210 |

## KIPP Wedge clamps, wide version

| Order No. jaw face smooth | Order No. jaw face serrated | A min. | A max. | B | C | E | F Socket head screw DIN 6912 | Clamping force kN | Tightening torque Nm |
|---|---|---|---|---|---|---|---|---|---|
| **K0039.1208** | **K0039.2208** | 30,5 | 33,5 | 30 | 15 | 2 | M8x25 | 15 | 25 |
| **K0039.1210** | **K0039.2210** | 32 | 37 | 38 | 19 | 3,5 | M10x25 | 20 | 49 |
| **K0039.1212** | **K0039.2212** | 44 | 49,5 | 48 | 22 | 3,5 | M12x40 | 30 | 85 |
| **K0039.1216** | **K0039.2216** | 55 | 62 | 48 | 29 | 4 | M16x60 | 50 | 210 |

KIRÁLY TRADING KFT H-1151 Budapest Mogyoród útja 12 - 14 tel: 061307-3801 Email:pzoli@kiralytrading.hu

# Wedge clamps

machinable

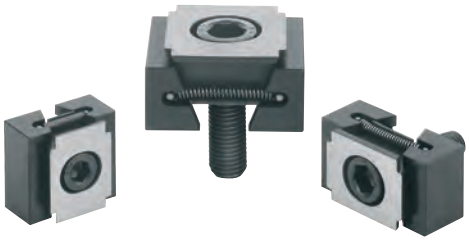

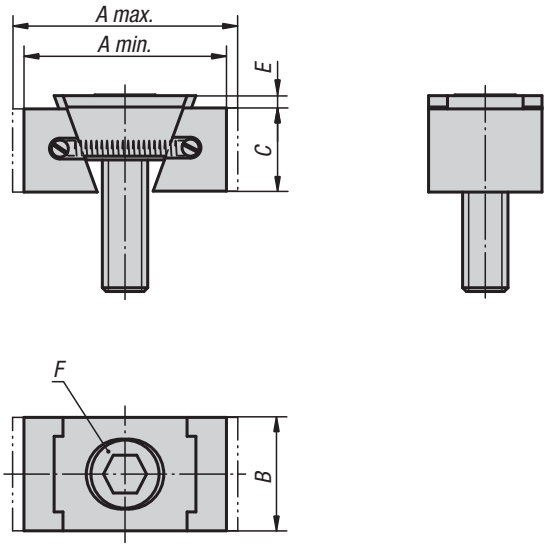


**Material:**
Wedge and jaw segments carbon steel.

**Version:**
Wedge and jaw segments hardened, black.

**Sample order:**
K0649.3110

**Note:**
These wedge clamps have extra long jaws. This extra material allows the jaws to machined to suit the form of the workpiece.
The functioning principle make the wedge clamps ideal for series clamping. The wedge form can exert high clamping forces.
These wedge clamps can be mounted in grid holes or T-slots. Tightening the socket screw moves the wedge down and the jaws out pressing the workpieces against the fixtures fixed stops.
The wedge has a slightly elongated hole allowing for movement to compensate for tolerances.

Spread width:
M8 = ±0.5 mm
M10 = ±1.0 mm
M12 = ±1.0 mm
M16 = ±1.5 mm

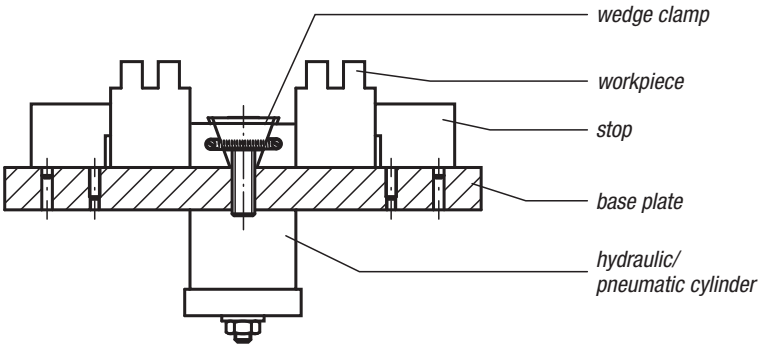


## KIPP Wedge clamps machinable

| Order No. | Version | A min. | A max. | B | C | E | F Socket head screw DIN 6912 | Clamping force kN | Tightening torque Nm |
|---|---|---|---|---|---|---|---|---|---|
| **K0649.3108** | narrow | 36,5 | 39,5 | 24 | 15 | 2 | M8x25 | 11 | 19 |
| **K0649.3110** | narrow | 42 | 47 | 28 | 19 | 3,5 | M10x25 | 15 | 37 |
| **K0649.3112** | narrow | 54 | 59,5 | 30 | 22 | 3,5 | M12x40 | 23 | 65 |
| **K0649.3116** | narrow | 65 | 72 | 40 | 29 | 4 | M16x60 | 38 | 160 |
| **K0649.3208** | wide | 36,5 | 39,5 | 30 | 15 | 2 | M8x25 | 11 | 19 |
| **K0649.3210** | wide | 42 | 47 | 38 | 19 | 3,5 | M10x25 | 15 | 37 |
| **K0649.3212** | wide | 54 | 59,5 | 48 | 22 | 3,5 | M12x40 | 23 | 65 |
| **K0649.3216** | wide | 65 | 72 | 48 | 29 | 4 | M16x60 | 38 | 160 |

KIRÁLY TRADING KFT H-1151 Budapest Mogyoród útja 12 - 14 tel: 061307-3801 Email:pzoli@kiralytrading.hu

# Wedge clamps

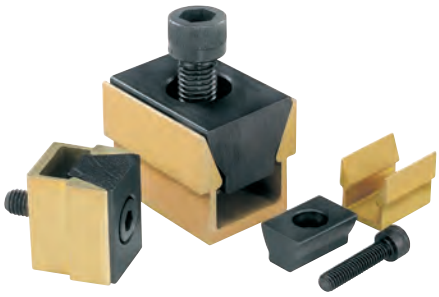

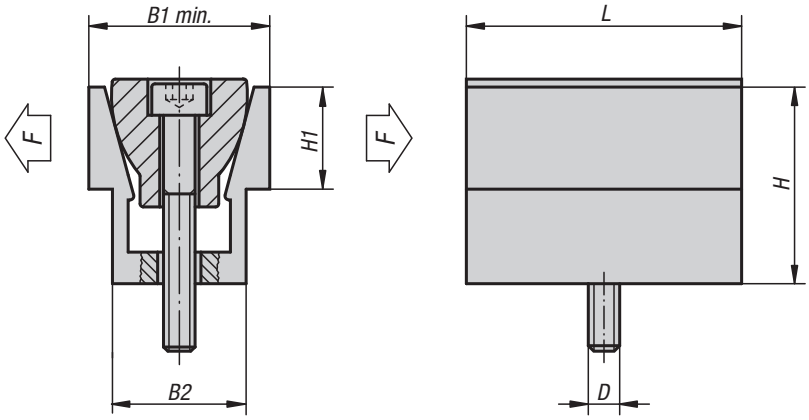


**Material:**
Channel aluminium profile.
Wedge hardened steel.

**Version:**
Channel anodized.
Wedge black oxidised.

**Sample order:**
K0037.08

**Note:**
Two workpieces can be held simultaneously with the wedge clamp. They are ideal for clamping round or rectangular pieces. The compact design allows space-saving series clamping.

In clamped position dimension B1 max. given in the table should be achieved.

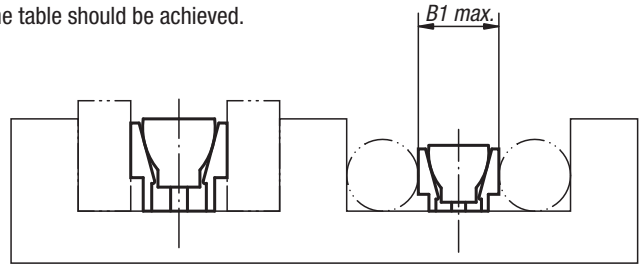


## KIPP Wedge clamps

| Order No. | D | L | B1 min. - max. | B2 | H | H1 | F kN | Tightening torque max. Nm |
|---|---|---|---|---|---|---|---|---|
| **K0037.04** | M4 | 15,9 | 12,3 - 13,1 | 10,4 | 12,7 | 5,6 | 2,2 | 3,4 |
| **K0037.06** | M6 | 23,8 | 18,6 - 19,9 | 16,1 | 19 | 9,5 | 6,7 | 14,3 |
| **K0037.08** | M8 | 31,7 | 24,8 - 26,6 | 20,8 | 25,4 | 12,7 | 8,9 | 14,5 |
| **K0037.12** | M12 | 47,6 | 37,3 - 39,7 | 30,8 | 38,1 | 19 | 15,6 | 38,4 |
| **K0037.16** | M16 | 63,5 | 49,7 - 52,8 | 41,2 | 50,8 | 25,4 | 26,7 | 74,6 |

# K0038

# Wedge clamps

machinable

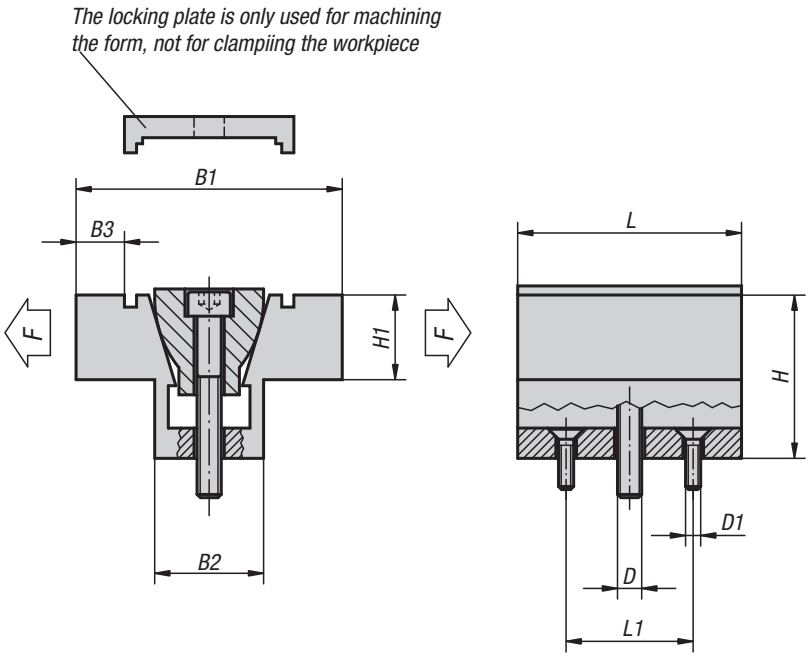


**Material:**
Channel aluminium profile.
Wedge hardened steel.

**Version:**
Channel anodized.
Wedge black oxidised.

**Sample order:**
K0038.08

**Note:**
Two workpieces can be held simultaneously with the wedge clamp. The jaws have extra material allowing them to be machined to conform to the shape of the workpiece. The compact design allows space-saving series clamping.

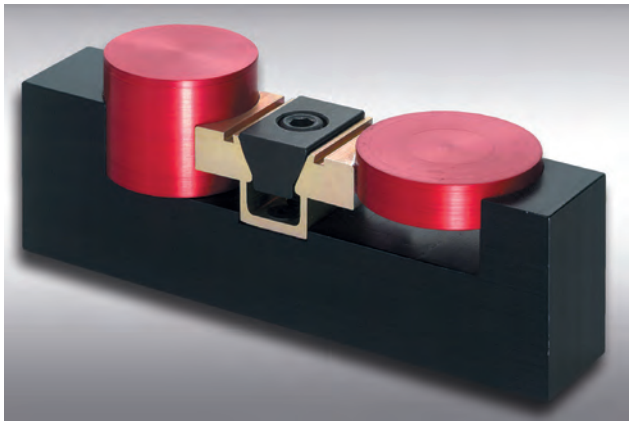

## KIPP Wedge clamps machinable

| Order No. | D | D1 | L | L1 | B1 min. - max. | B2 | B3 | H | H1 | F kN | Tightening torque max. Nm |
|---|---|---|---|---|---|---|---|---|---|---|---|
| **K0038.04** | M4 | M2 | 15,7 | 10,16 | 28,6 - 29,1 | 10,6 | 4,6 | 12,7 | 6,3 | 2,2 | 3,4 |
| **K0038.06** | M6 | M4 | 23,9 | 15,9 | 38,1 - 39 | 16,1 | 6,6 | 19,1 | 9,4 | 6,7 | 14,3 |
| **K0038.08** | M8 | M4 | 31,8 | 20,6 | 50,8 - 52 | 20,8 | 9,9 | 25,4 | 12,7 | 8,9 | 14,5 |
| **K0038.12** | M12 | M5 | 47,5 | 30,5 | 76,2 - 78 | 30,9 | 15,7 | 38,1 | 19 | 15,6 | 38,4 |
| **K0038.16** | M16 | M6 | 63,5 | 41,28 | 101,6 - 103,9 | 41,3 | 20,3 | 50,8 | 25,4 | 26,7 | 74,6 |

KIRÁLY TRADING KFT H-1151 Budapest Mogyoród útja 12 - 14 tel: 061307-3801 Email:pzoli@kiralytrading.hu

# Example of a multi-clamping system

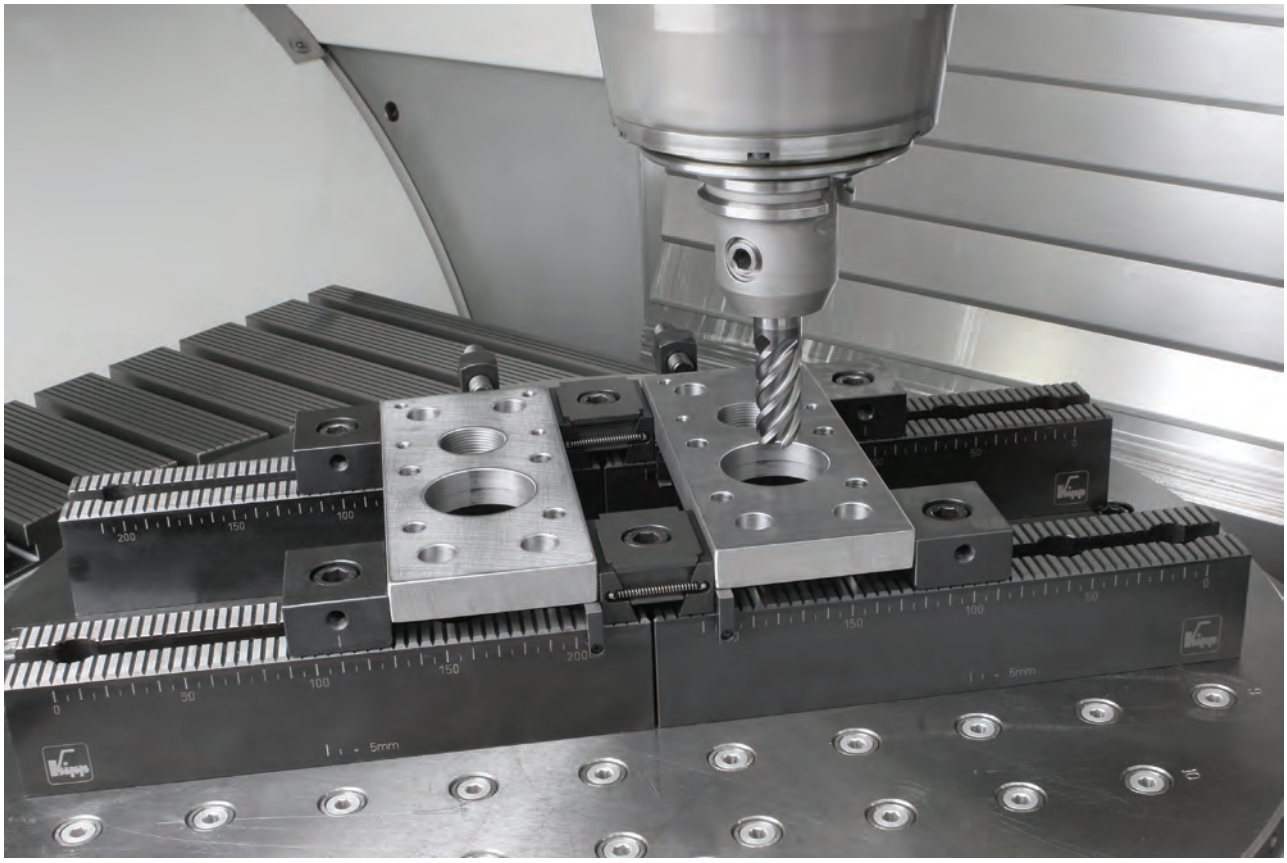

## Notes

KIRÁLY TRADING KFT H-1151 Budapest Mogyoród útja 12 - 14 tel: 061307-3801 Email:pzoli@kiralytrading.hu

# One Touch Clamping System

**Locators**
**Supports**
**Clamps and**
**Adjustable elements**

## Power clamping

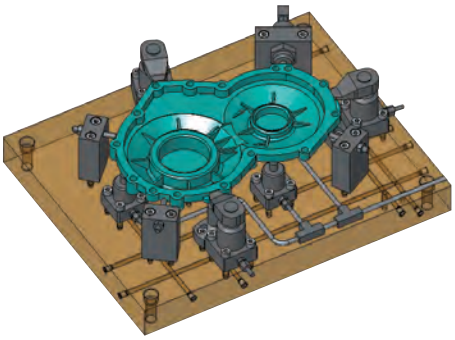

**Costly and cumbersome**
maintenance

## Conventional manual clamping

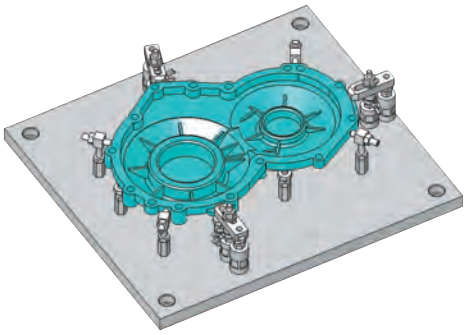

**Slow setup**
**Inconsistent clamping force**

## Workholding with one touch clamps

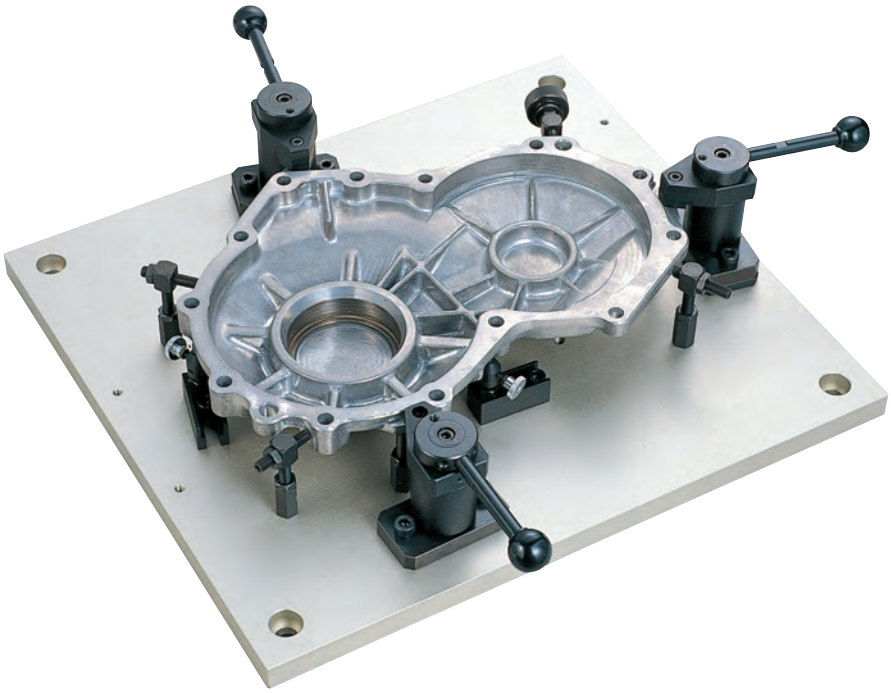

**Perfect for light cutting applications**

# One touch clamps for light machining

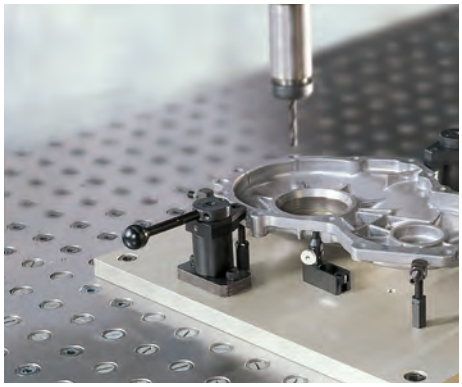

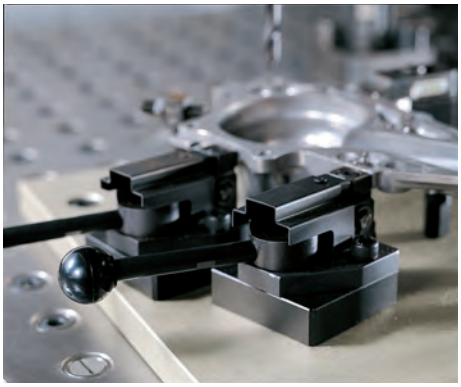

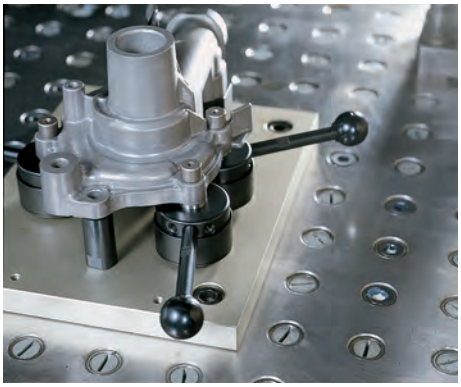

# K0910

# Pull clamps

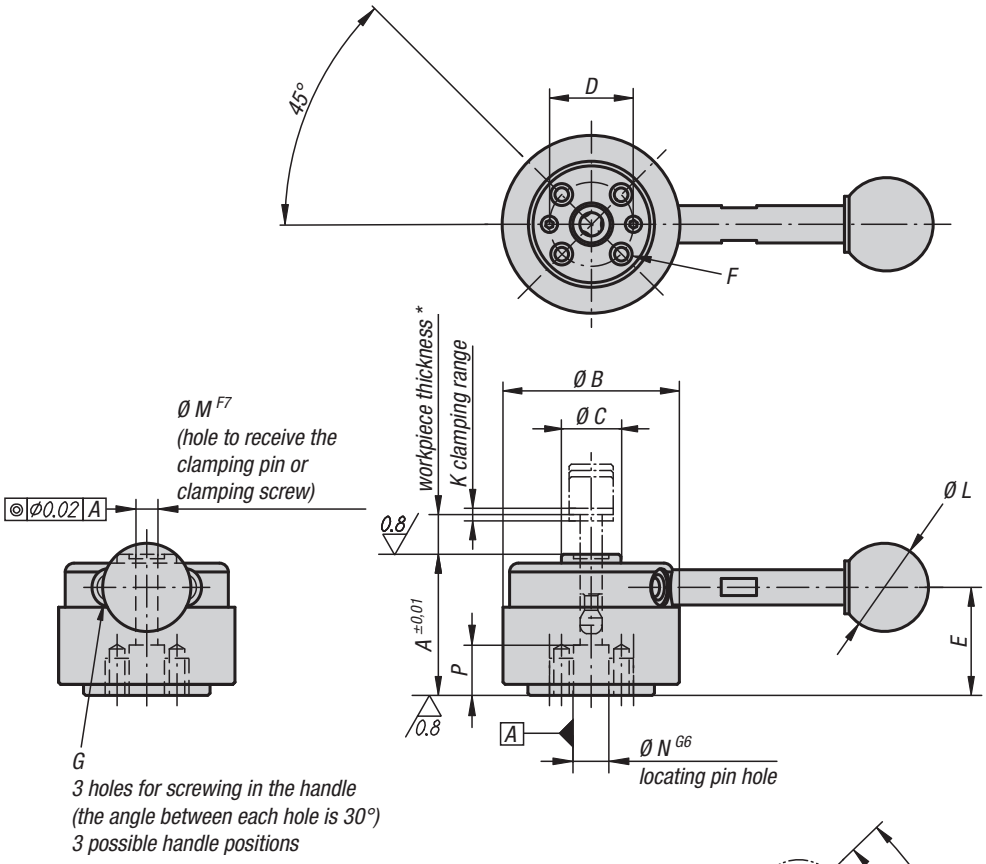


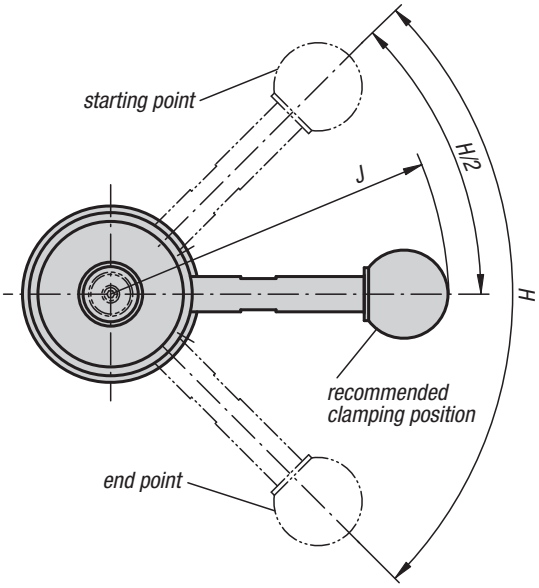


**Material:**
Housing and cam tool steel.
Grip carbon steel.
Ball knob Duroplast PF 31.

**Version:**
Housing and cam hardened and black oxidised.
Grip black oxidised.
Ball knob black.

**Sample order:**
K0910.324001

**Note:**
* Max. workpiece thickness see clamping pin K0910 (dimension C).
** Admissible hand force for the handle.

**Accessories:**
Standard handles K0915.
Screw-in handles with adjustable torque K0916.

## KIPP Pull clamps

| Order No. | Version | A | B | C | D | E | F | G | H | J | K | L | M | N | P | Clamping force N | Recommended workpiece thickness tolerance | Hand force N | Holding force N |
|---|---|---|---|---|---|---|---|---|---|---|---|---|---|---|---|---|---|---|---|
| **K0910.324000** | without handle | 32 | 40 | 13,5 | 18 | 24,5 | M4x8 | M5 | 90° | - | 1,5 | - | 5 | 8 | 10 | 900 | ±0,3* | 150** | 2000 |
| **K0910.324001** | with handle | 32 | 40 | 13,5 | 18 | 24,5 | M4x8 | M5 | 90° | 76,5 | 1,5 | 20 | 5 | 8 | 10 | 900 | ±0,3* | 150** | 2000 |
| **K0910.405000** | without handle | 40 | 50 | 18 | 25 | 30,7 | M6x9 | M6 | 110° | - | 2 | - | 8 | 12 | 13 | 2500 | ±0,5* | 200** | 5500 |
| **K0910.405001** | with handle | 40 | 50 | 18 | 25 | 30,7 | M6x9 | M6 | 110° | 111,5 | 2 | 25 | 8 | 12 | 13 | 2500 | ±0,5* | 200** | 5500 |

KIRÁLY TRADING KFT H-1151 Budapest Mogyoród útja 12 - 14 tel: 061307-3801 Email:pzoli@kiralytrading.hu

# Pull clamps (high force)

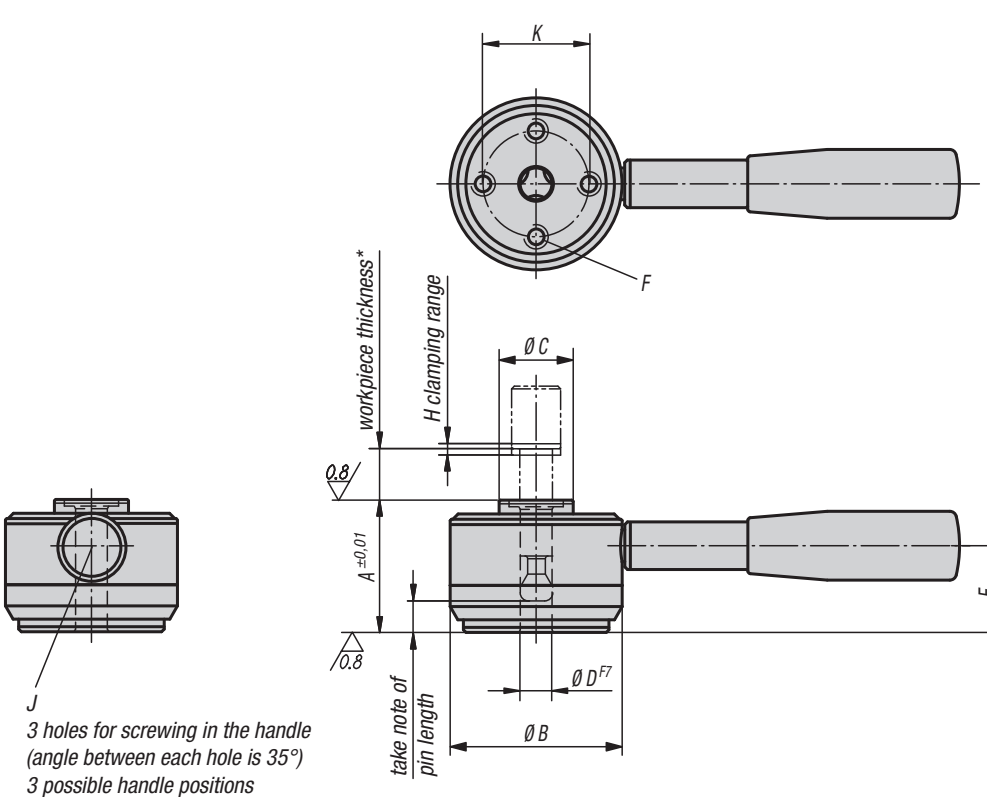

**Material:**
Housing, clamping ring and handles, carbon steel.
Grip Duroplast PF 31.

**Version:**
Housing and clamping ring hardened and black oxidised.
Handles black oxidised.
Grip black.

**Sample order:**
K0911.506501

**Note:**
When clamping with a high force clamping pin the recommended workpiece tolerances must be maintained. The grip lever must lay between the recommended clamping position and end point for safe clamping.

* Max. workpiece thickness, see clamping pin K0911 (dimension C).
** Admissible hand force for the handle.

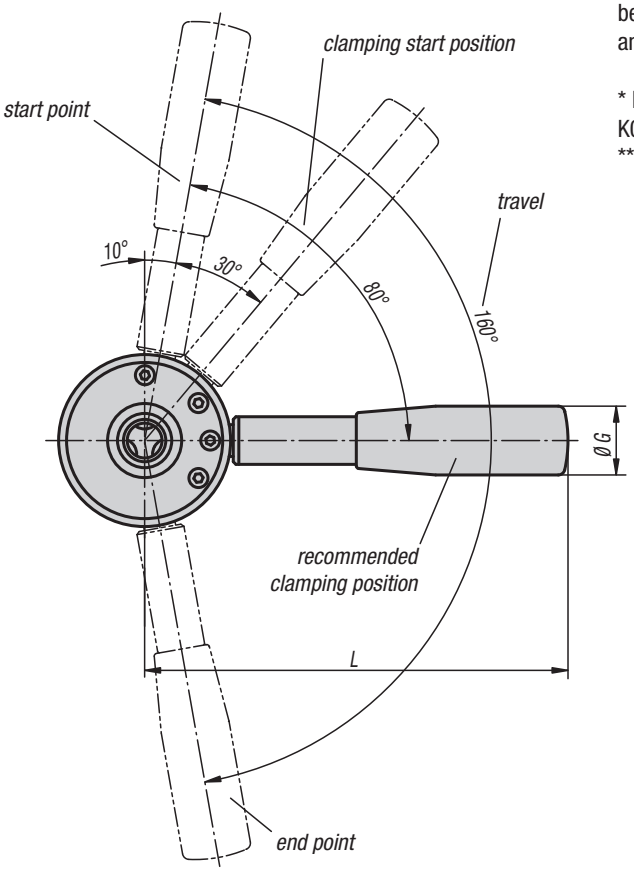


## KIPP Pull clamps (high force)

| Order No. | A | B | C | D | E | F | G | H | J | K | L | Clamping force N | Recommended workpiece thickness tolerance | Hand force N | Holding force N |
|---|---|---|---|---|---|---|---|---|---|---|---|---|---|---|---|
| **K0911.506501** | 50 | 65 | 28 | 12 | 36 | M8x14 | 26 | 2 | 10 | 40 | 160 | 6000 | ±0,5* | 600** | 8000 |
| **K0911.638001** | 63 | 80 | 34 | 16 | 45 | M10x18 | 28 | 2,5 | 12 | 50 | 180 | 8000 | ±0,8* | 600** | 14000 |

KIRÁLY TRADING KFT H-1151 Budapest Mogyoród útja 12 - 14 tel: 061307-3801 Email:pzoli@kiralytrading.hu

# How to locate workpiece

Workpiece positioning

Clamping by means of pull clamp and clamping pin

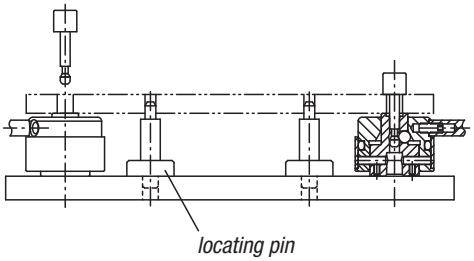


Simultaneous clamping and positioning of a workpiece

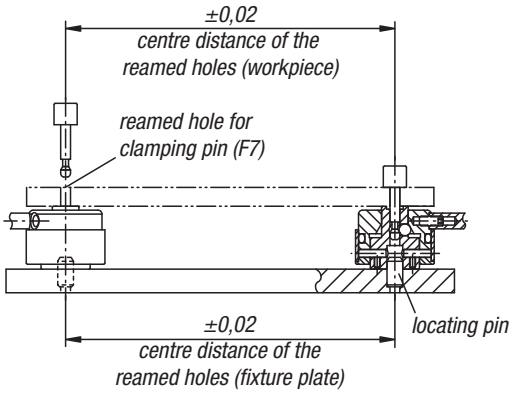


Holding forces for workpiece processing

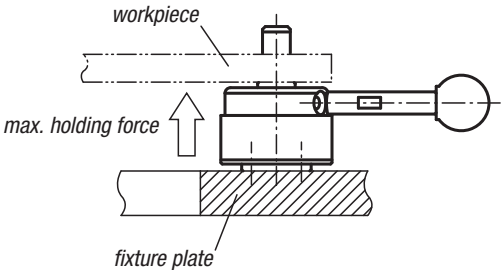


Make sure that no force exceeding the values
in the table is affecting the bottom of the workpiece.

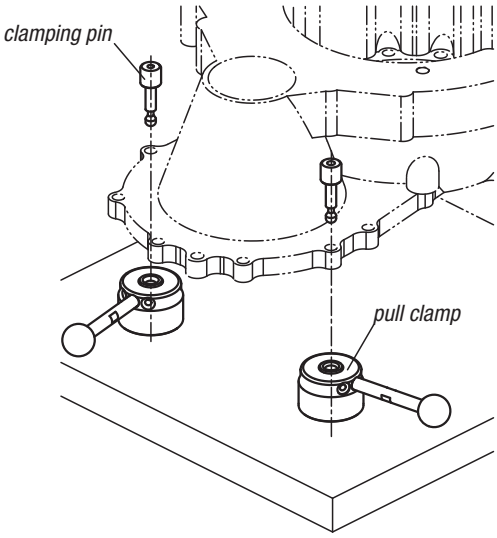


performance curve

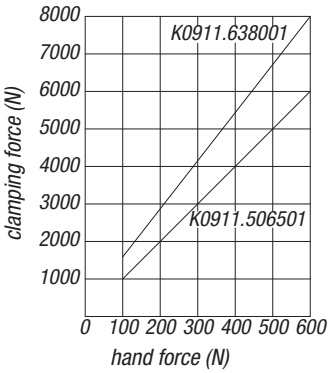

KIRÁLY TRADING KFT H-1151 Budapest Mogyoród útja 12 - 14 tel: 061307-3801 Email:pzoli@kiralytrading.hu

# One Touch Clamps

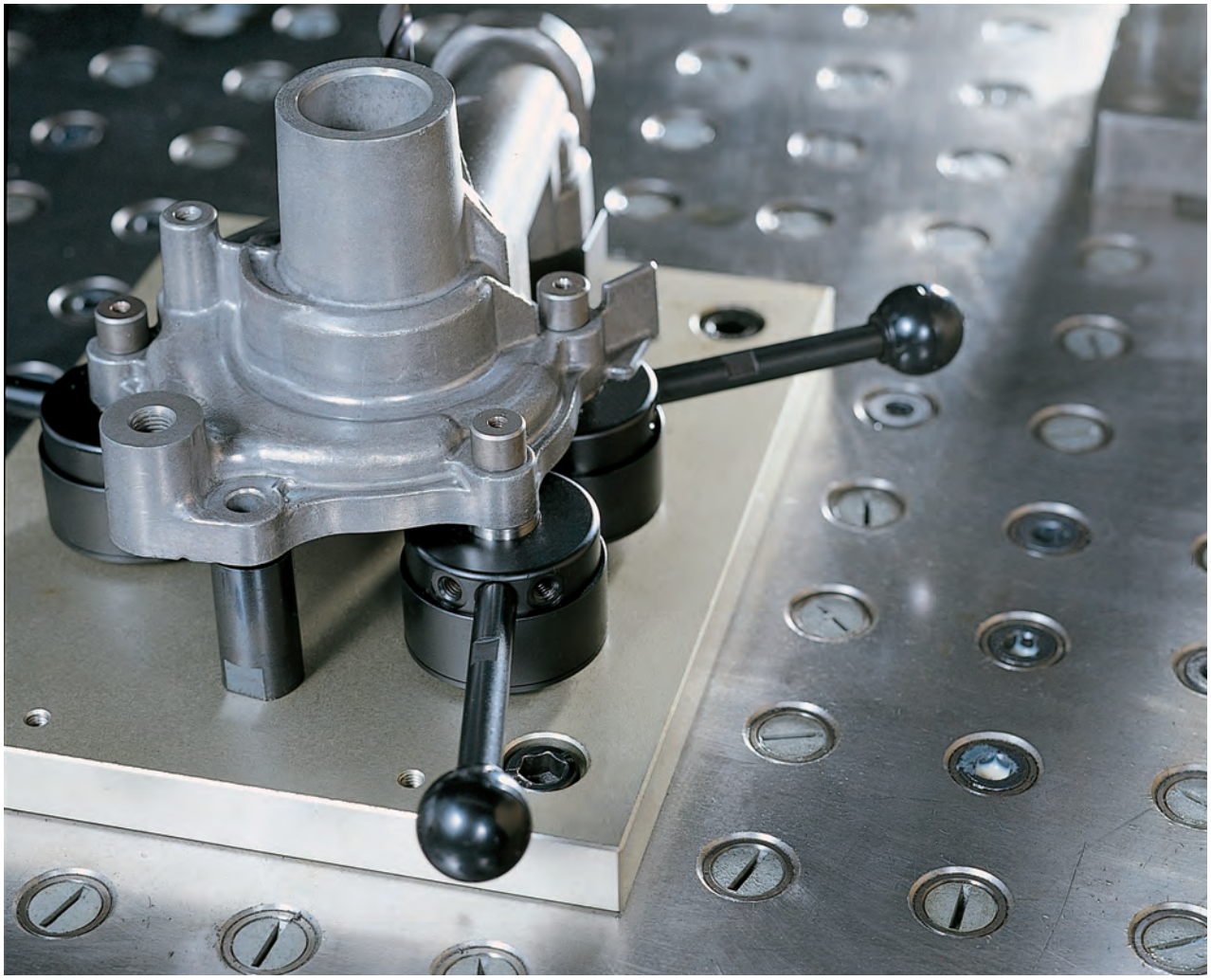

KIRÁLY TRADING KFT H-1151 Budapest Mogyoród útja 12 - 14 tel: 061307-3801 Email:pzoli@kiralytrading.hu

# Clamping pins

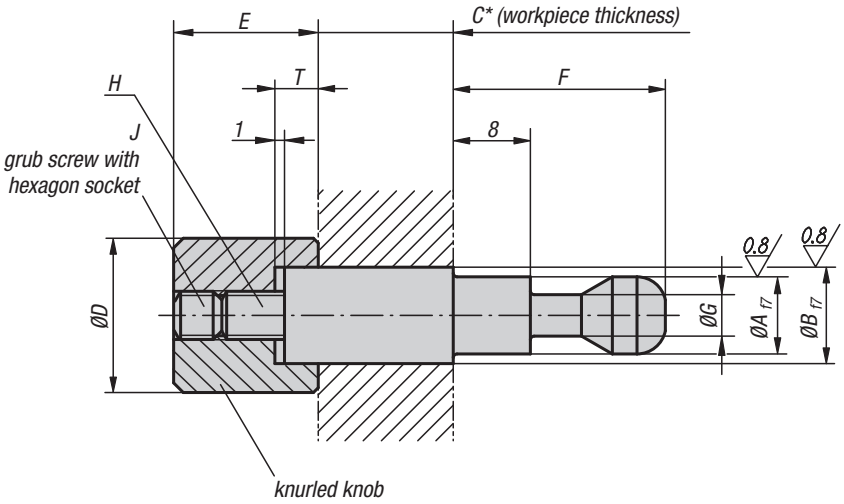


**Material:**
Carbon steel.

**Version:**
Pins tempered and ground.
Knurled knob tempered, black oxidised.

**Sample order:**
K0910.005050

**Note:**
* The clamping pin can be altered to suit the workpiece thickness.

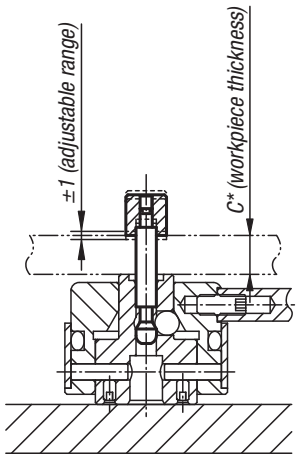


## KIPP Clamping pins

| Order No. | A | B | C | D | E | F | G | H | J | T | Suitable for |
|---|---|---|---|---|---|---|---|---|---|---|---|
| **K0910.005050** | 5 | 5 | 50 | 10 | 10 | 17 | 3 | M3 | M3x4 | 3 | K0910.3240... |
| **K0910.006050** | 5 | 6 | 50 | 10 | 10 | 17 | 3 | M3 | M3x4 | 3 | K0910.3240... |
| **K0910.008080** | 8 | 8 | 80 | 16 | 15 | 22 | 4,3 | M5 | M5x5 | 4,5 | K0910.4050... |
| **K0910.010080** | 8 | 10 | 80 | 16 | 15 | 22 | 4,3 | M5 | M5x5 | 4,5 | K0910.4050... |

KIRÁLY TRADING KFT H-1151 Budapest Mogyoród útja 12 - 14 tel: 061307-3801 Email:pzoli@kiralytrading.hu

# Clamping pins (high force)

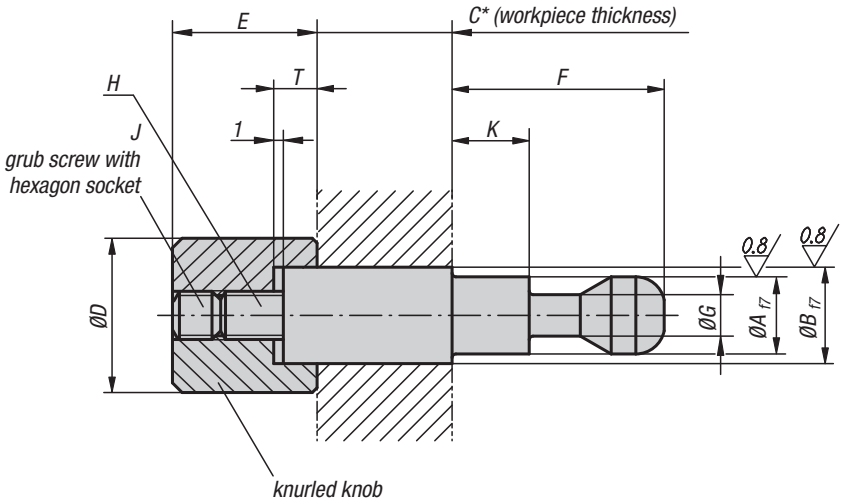


**Material:**
Carbon steel.

**Version:**
Pins tempered and ground.
Knurled knob tempered, black oxidised.

**Sample order:**
K0911.412100

**Note:**
* The clamping pin can be altered to suit the workpiece thickness.

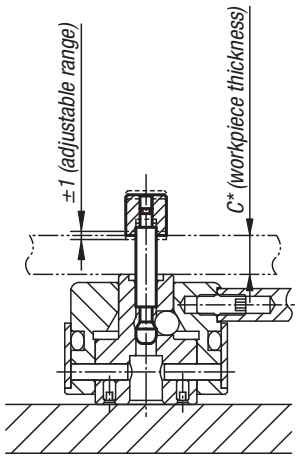


## KIPP Clamping pins (high force)

| Order No. | A | B | C | D | E | F | G | H | J | K | T | Suitable for |
|---|---|---|---|---|---|---|---|---|---|---|---|---|
| **K0911.412100** | 12 | 12 | 100 | 18 | 23 | 38 | 6,5 | M8 | M8x8 | 21,5 | 7 | K0911.506501 |
| **K0911.416100** | 12 | 16 | 100 | 24 | 23 | 38 | 6,5 | M8 | M8x8 | 21,5 | 7 | K0911.506501 |
| **K0911.516120** | 16 | 16 | 120 | 24 | 29 | 48 | 9,5 | M10 | M10x10 | 28 | 9 | K0911.638001 |
| **K0911.520120** | 16 | 20 | 120 | 30 | 29 | 48 | 9,5 | M10 | M10x10 | 28 | 9 | K0911.638001 |

KIRÁLY TRADING KFT H-1151 Budapest Mogyoród útja 12 - 14 tel: 061307-3801 Email:pzoli@kiralytrading.hu

# Clamping screws

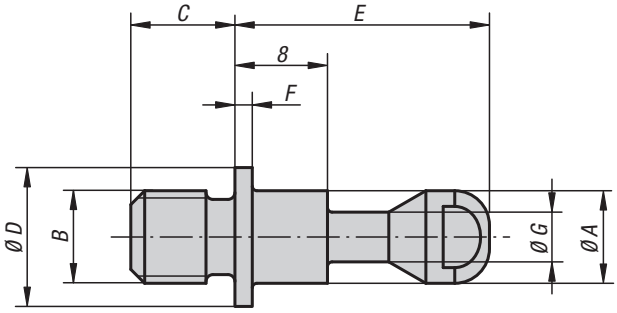


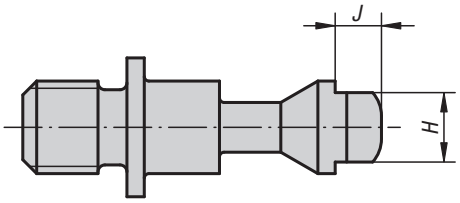


**Material:**
Carbon steel.

**Version:**
Tempered and black oxidised.

**Sample order:**
K0910.105060

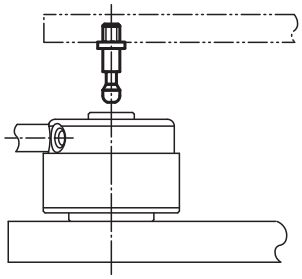

## KIPP Clamping screws

| Order No. | A | B | C | D | E | F | G | H | J | Suitable for |
|---|---|---|---|---|---|---|---|---|---|---|
| **K0910.105060** | 5 | M5 | 6 | 8 | 17 | 1,2 | 3 | 4 | 2,5 | K0910.3240... |
| **K0910.106070** | 5 | M6 | 7 | 8 | 17 | 1,2 | 3 | 4 | 2,5 | K0910.3240... |
| **K0910.108090** | 8 | M8 | 9 | 12 | 22 | 1,5 | 4,3 | 6 | 4 | K0910.4050... |
| **K0910.110110** | 8 | M10 | 11 | 12 | 22 | 1,5 | 4,3 | 6 | 4 | K0910.4050... |

KIRÁLY TRADING KFT H-1151 Budapest Mogyoród útja 12 - 14 tel: 061307-3801 Email:pzoli@kiralytrading.hu

# Clamping screws (high force)

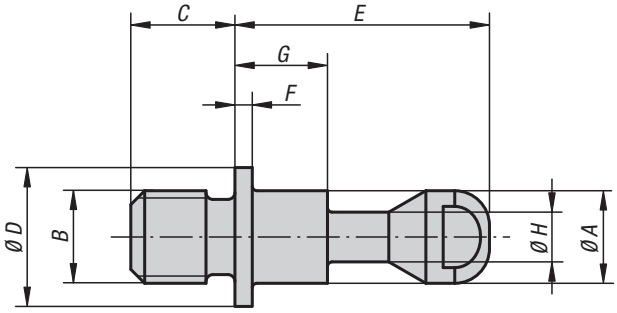


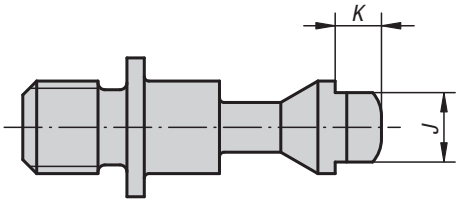


**Material:**
Carbon steel.

**Version:**
Tempered and black oxidised.

**Sample order:**
K0911.1412013

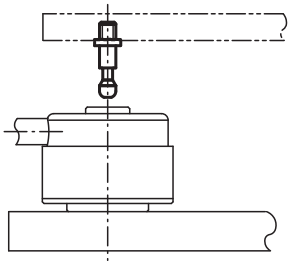

## KIPP Clamping screws (high force)

| Order No. | A | B | C | D | E | F | G | H | J | K | Suitable for |
|---|---|---|---|---|---|---|---|---|---|---|---|
| **K0911.1412013** | 12 | M12 | 13 | 20 | 38 | 2 | 21,5 | 6,5 | 10 | 4 | K0911.506501 |
| **K0911.1416017** | 12 | M16 | 17 | 20 | 38 | 2 | 21,5 | 6,5 | 10 | 4 | K0911.506501 |
| **K0911.1516017** | 16 | M16 | 17 | 25 | 48 | 2,5 | 28 | 9,5 | 13 | 5 | K0911.638001 |
| **K0911.1520021** | 16 | M20 | 21 | 25 | 48 | 2,5 | 28 | 9,5 | 13 | 5 | K0911.638001 |

# K0912

# Swing clamps

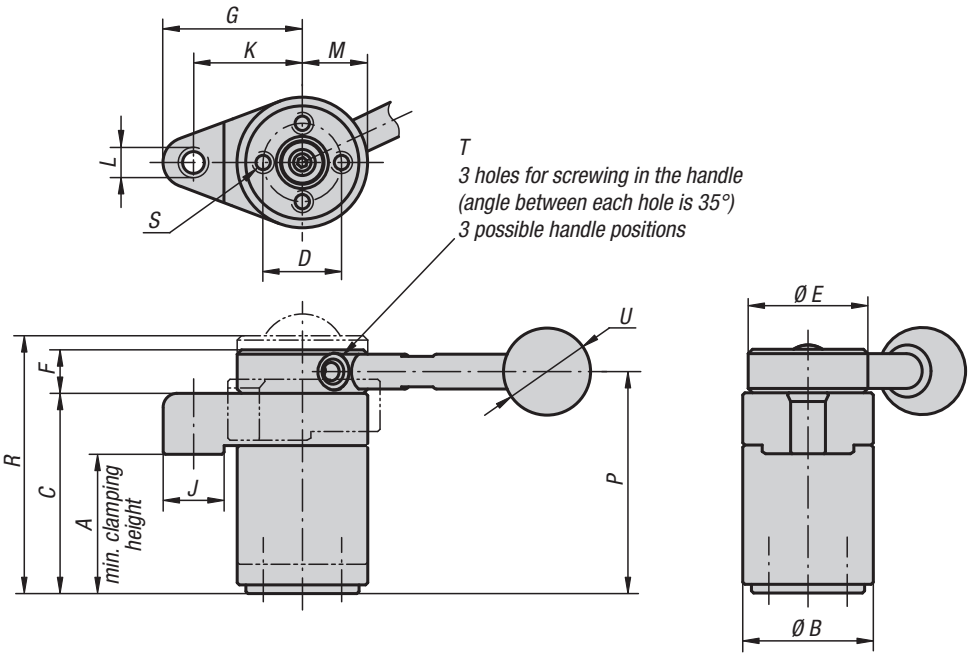


**Material:**
Carbon steel.
Ball knob plastic.

**Version:**
Tempered and black oxidised.
Ball knob Duroplast PF 31, black.

**Sample order:**
K0912.013232

**Note:**
* Admissible hand force to operate the handle.

**Accessories:**
Standard handles K0915.
Screw-in handles with adjustable torque K0916.

Right hand

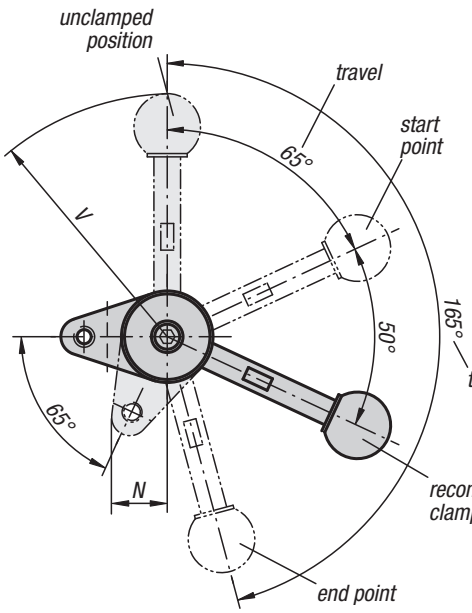


Left hand

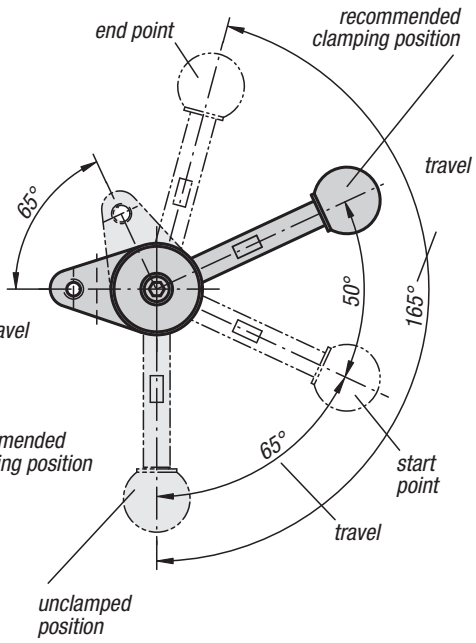


## KIPP Swing clamps

| Order No. left-hand type | Order No. right-hand type | Version | A min. | A max. | B | C | D | E | F | G | J | K | L | M | N | P | R | S | T | U | V | Clamping force N | Hand force N |
|---|---|---|---|---|---|---|---|---|---|---|---|---|---|---|---|---|---|---|---|---|---|---|---|
| **K0912.003232** | **K0912.103232** | without handle | 31,4 | 32,6 | 30 | 46 | 18 | 30 | 10 | 32 | 14 | 25 | M6 | 15 | 17 | 51 | 57,5 | M4x8 | M5 | - | - | 800 | 150* |
| **K0912.004540** | **K0912.104540** | without handle | 44,1 | 45,9 | 40 | 63 | 25 | 38 | 13 | 40 | 16 | 32 | M8 | 20 | 22,5 | 69,5 | 78,1 | M6x12 | M6 | - | - | 1200 | 200* |
| **K0912.013232** | **K0912.113232** | with handle | 31,4 | 32,6 | 30 | 46 | 18 | 30 | 10 | 32 | 14 | 25 | M6 | 15 | 17 | 51 | 57,5 | M4x8 | M5 | 20 | 73 | 800 | 150* |
| **K0912.014540** | **K0912.114540** | with handle | 44,1 | 45,9 | 40 | 63 | 25 | 38 | 13 | 40 | 16 | 32 | M8 | 20 | 22,5 | 69,5 | 78,1 | M6x12 | M6 | 25 | 107 | 1200 | 200* |

# Technical Information for swing clamps

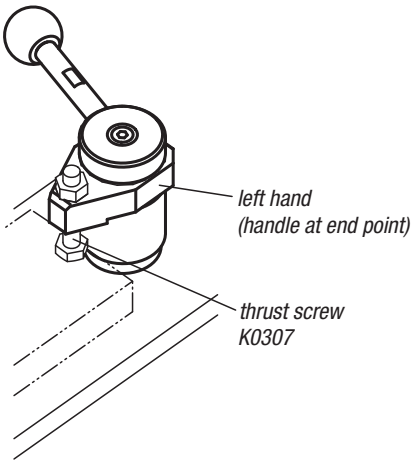


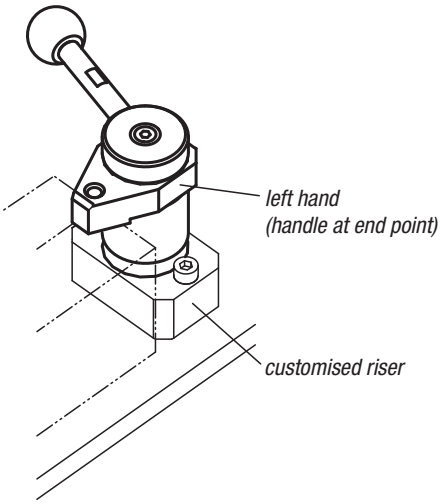


Mounting an attachment

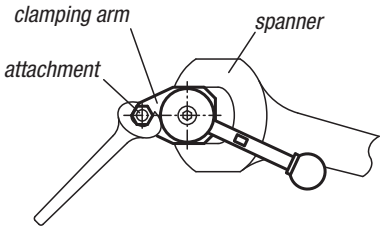


When mounting an attachment on the clamping arm, use a spanner to lock the arm and prevent it from turning.

# Notes

KIRÁLY TRADING KFT H-1151 Budapest Mogyoród útja 12 - 14 tel: 061307-3801 Email:pzoli@kiralytrading.hu

# Swing clamps (high force)

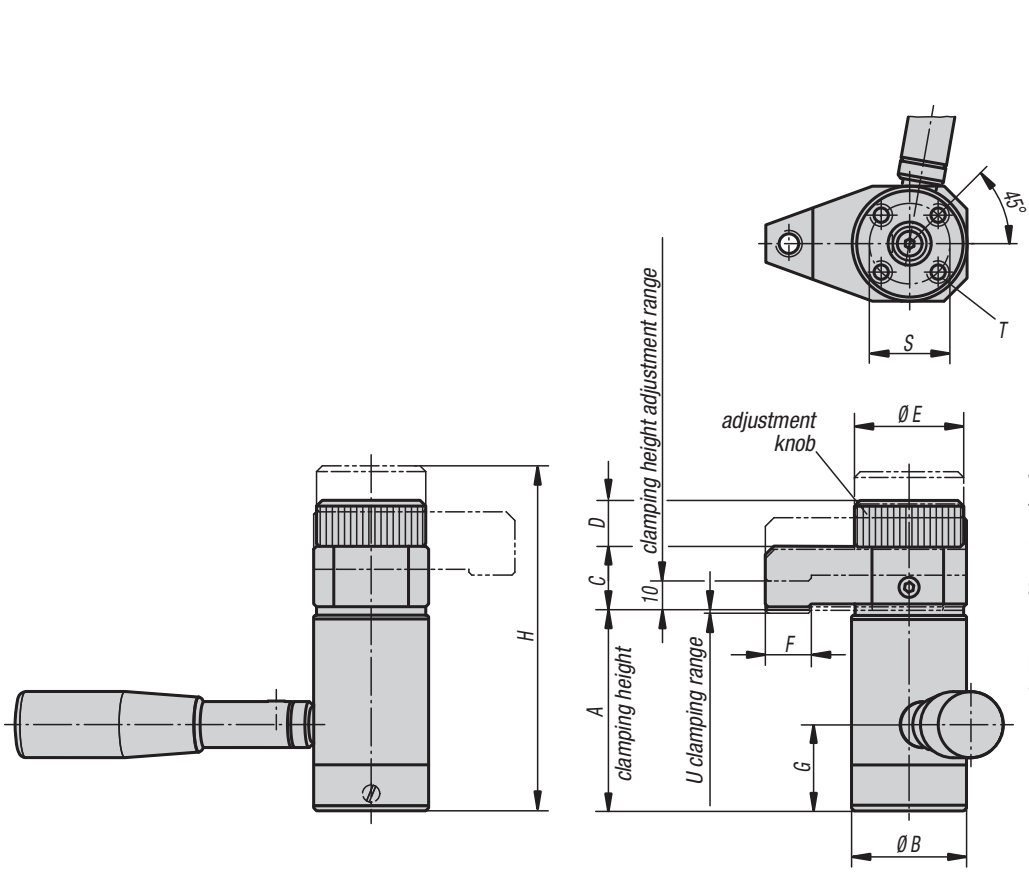

**Material:**
Carbon steel.
Grip plastic.

**Version:**
Tempered and black oxidised.
Grip black Duroplast PF 31.

**Sample order:**
K0913.017030

**Note:**
* Admissible hand force for the handle.

Right hand

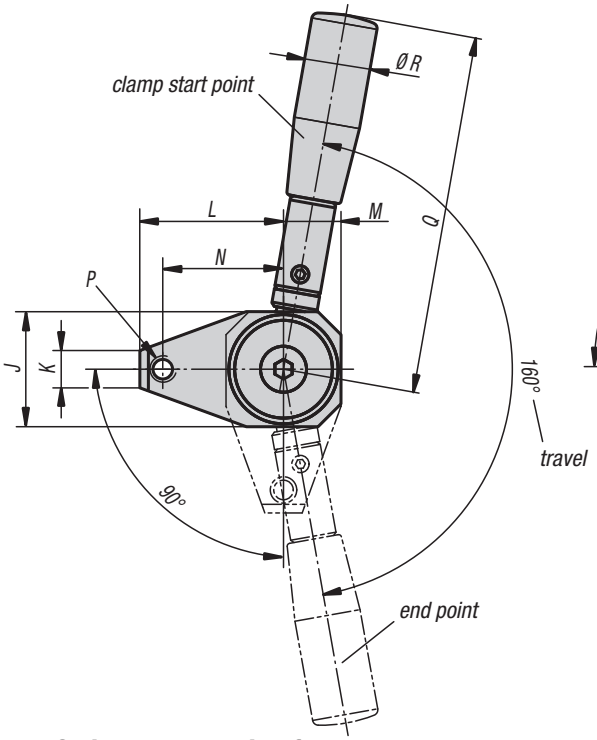


Left hand

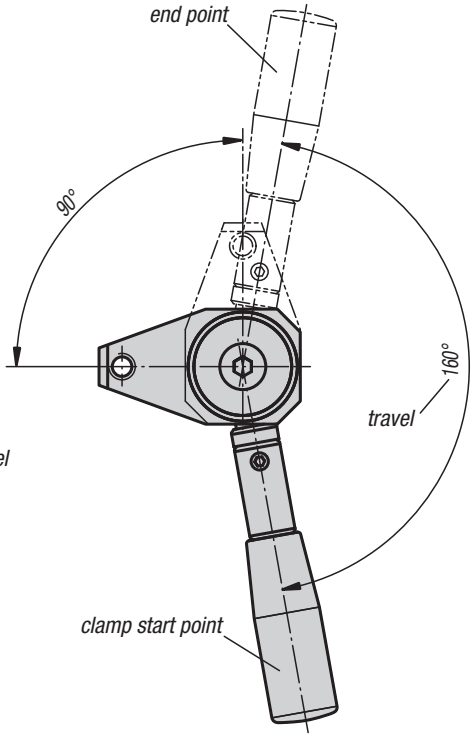


## KIPP Swing clamps (high force)

| Order No. left-hand type | Order No. right-hand type | A min. | A max. | B | C | D | E | F | G | H | J | K | L | M | N | P | Q | R | S | T | U | Clamping force N | Hand force N | Holding force N | Approx. weight kg |
|---|---|---|---|---|---|---|---|---|---|---|---|---|---|---|---|---|---|---|---|---|---|---|---|---|---|
| **K0913.017030** | **K0913.117030** | 70 | 80 | 40 | 22 | 16 | 38 | 16 | 30 | 120 | 40 | 13 | 50 | 20 | 42 | M8 | 125 | 23 | 28 | M6x12 | 1,2 | 3500 | 600* | 8000 | 1,100 |
| **K0913.018038** | **K0913.118038** | 80 | 90 | 50 | 25 | 20 | 48 | 24 | 38 | 137 | 50 | 18 | 60 | 25 | 48 | M12 | 160 | 28 | 35 | M8x16 | 1,6 | 6000 | 600* | 14000 | 2,000 |

# Technical information for swing clamps (high force)

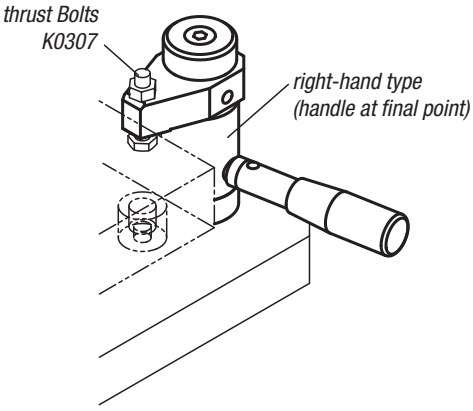


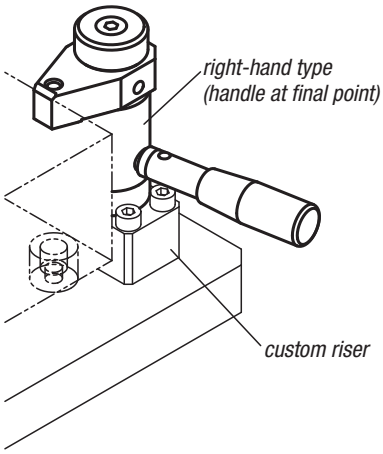


Holding forces for workpiece processing

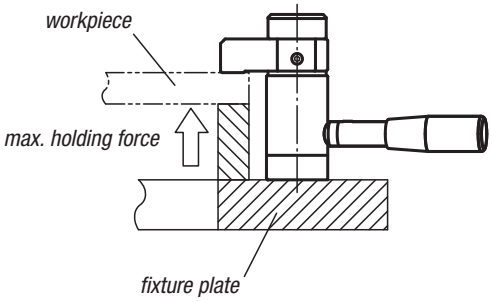


Top Installation

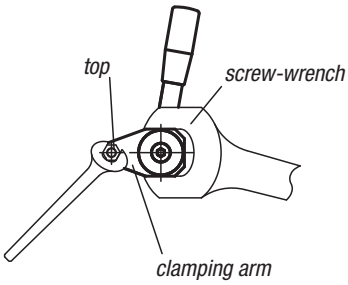


When mounting an attachment on the clamping arm, use a spanner to lock the arm and prevent it from turning.

K0913. performance curve

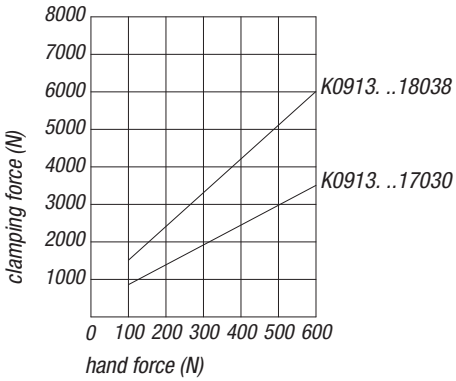

KIRÁLY TRADING KFT H-1151 Budapest Mogyoród útja 12 - 14 tel: 061307-3801 Email:pzoli@kiralytrading.hu

# Clamping arms

for swing clamp

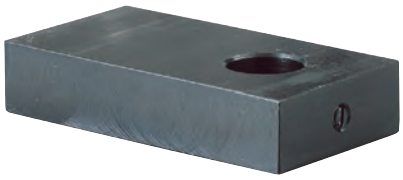

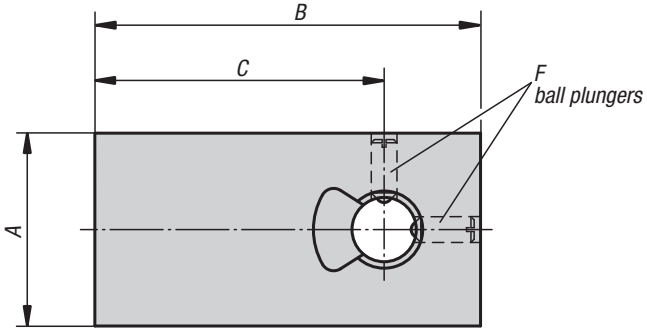


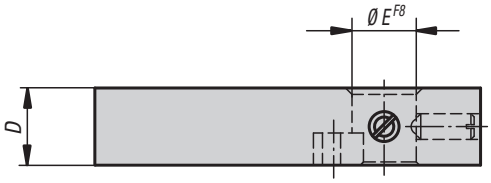


**Material:**
Carbon steel.

**Version:**
Black oxidised.

**Sample order:**
K0912.03006010

clamping arm length C vs. clamping force

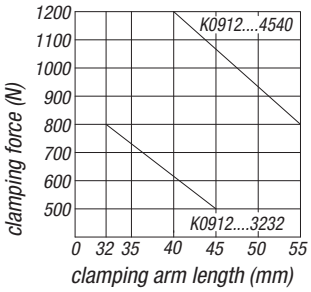


clamping arm length C vs. deflexion during clamping

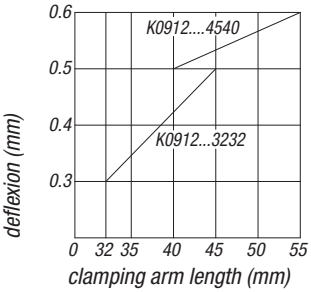


## KIPP Clamping arms for swing clamp

| Order No. | A | B | C | D | E | F | Suitable for | Approx. weight kg |
|---|---|---|---|---|---|---|---|---|
| **K0912.03006010** | 30 | 60 | 45 | 12 | 10 | M4 | K0912....3232 | 0,150 |
| **K0912.04007516** | 40 | 75 | 55 | 16 | 16 | M5 | K0912....4540 | 0,330 |

KIRÁLY TRADING KFT H-1151 Budapest Mogyoród útja 12 - 14 tel: 061307-3801 Email:pzoli@kiralytrading.hu

# Thrust clamps

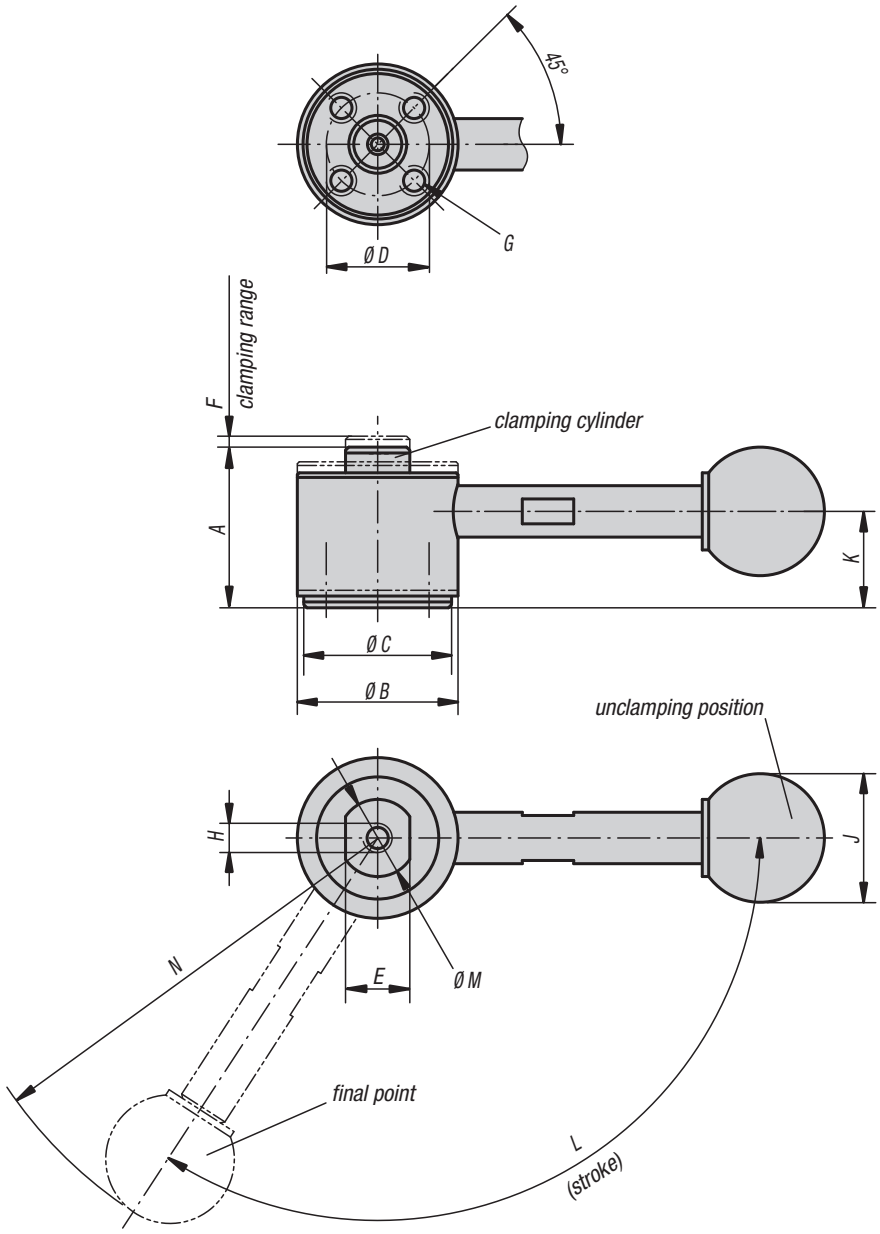


**Material, version:**
Cam tool steel, hardened and black oxidised.
Shaft carbon steel, hardened and black oxidised.
Grip carbon steel, black oxidised.
Ball knob black Duroplast PF 31.

**Sample order:**
K0914.252501

**Note:**
* Admissible hand force for the handle.

**Accessories:**
Standard handles K0915.
Screw-in handles with torque limit K0916.

downthrust clamping

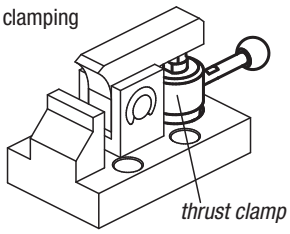


vertical clamping

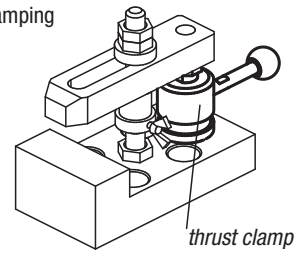


horizontal clamping

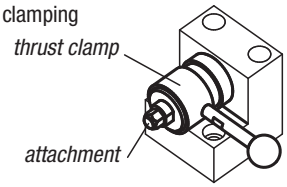


When mounting an attachment on the clamping cylinder, hold the shaft using a spanner to prevent turning.

## KIPP Thrust clamps

| Order No. | Version | A min. | A max. | B | C | D | E | F | G | H | J | K | L | M | N | Clamping force N | Hand force N | Approx. weight kg |
|---|---|---|---|---|---|---|---|---|---|---|---|---|---|---|---|---|---|---|
| **K0914.252500** | without handle | 25 | 26,7 | 25 | 23 | 16 | 10 | 1,7 | M4x6 | M4x6 | - | 15 | 123° | 12 | - | 3000 | 150* | 0,150 |
| **K0914.252501** | with handle | 25 | 26,7 | 25 | 23 | 16 | 10 | 1,7 | M4x6 | M4x6 | 20 | 15 | 123° | 12 | 69,5 | 3000 | 150* | 0,180 |
| **K0914.323200** | without handle | 32 | 34,5 | 32 | 30 | 20 | 13 | 2,5 | M6x9 | M6x9 | - | 19,5 | 135° | 15 | - | 4000 | 200* | 0,310 |
| **K0914.323201** | with handle | 32 | 34,5 | 32 | 30 | 20 | 13 | 2,5 | M6x9 | M6x9 | 25 | 19,5 | 135° | 15 | 103 | 4000 | 200* | 0,370 |

KIRÁLY TRADING KFT H-1151 Budapest Mogyoród útja 12 - 14 tel: 061307-3801 Email:pzoli@kiralytrading.hu

# Handles screw-in

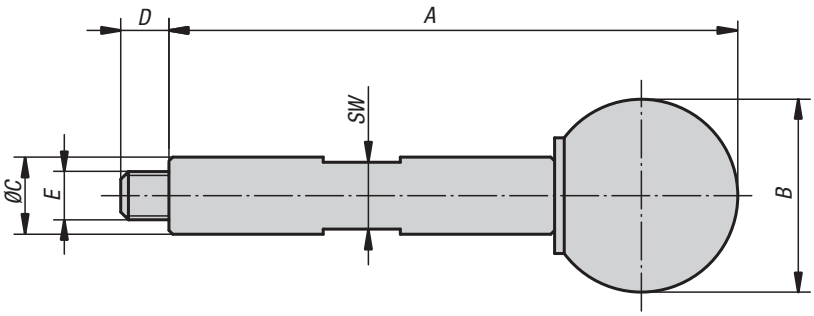


**Material:**
Grip carbon steel.
Ball knob Duroplast PF 31.

**Version:**
Grip, black oxidised.
Ball knob, black.

**Sample order:**
K0915.5059

## KIPP Handles screw-in

| Order No. | A | B | C | D | E | SW |
|---|---|---|---|---|---|---|
| **K0915.05059** | 59 | 20 | 8 | 5 | M5 | 7 |
| **K0915.06089** | 89 | 25 | 10 | 6 | M6 | 8 |

KIRÁLY TRADING KFT H-1151 Budapest Mogyoród útja 12 - 14 tel: 061307-3801 Email:pzoli@kiralytrading.hu

# Handles screw-in

with torque limit

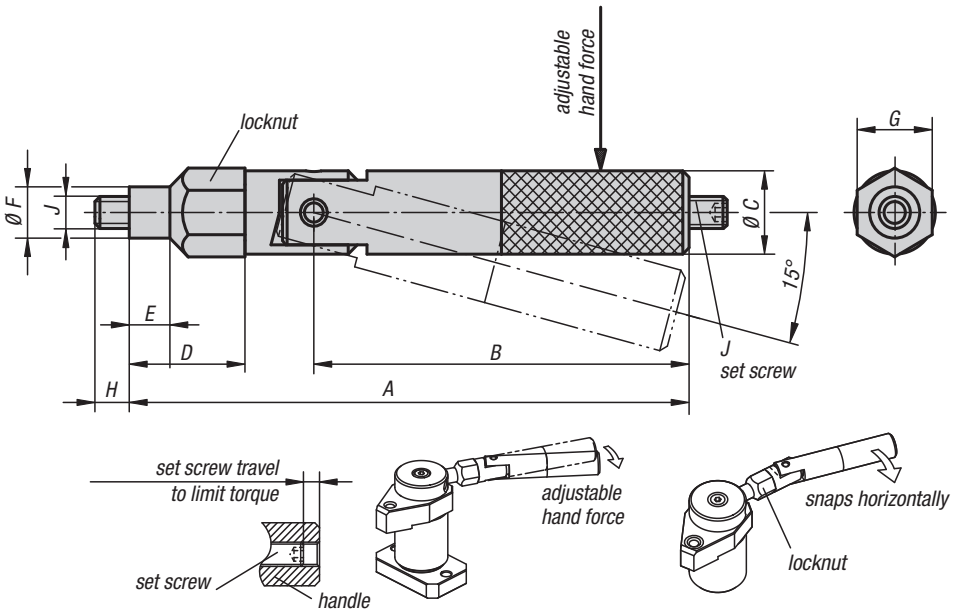


**Material:**
Carbon steel.

**Version:**
Hardened, black oxidised.

**Sample order:**
K0916.05090

**Note:**
The desired clamping force can be set by using the set screw to alter the torque. The handle snaps 15° when the set torque is achieved.

Note:
Ensure that the handle is set to snap horizontally.

## KIPP Handles, screw-in, with torque limit

| Order No. | A | B | C | D | E | F | G | H | J | K | Hand force N |
|---|---|---|---|---|---|---|---|---|---|---|---|
| **K0916.05090** | 89,5 | 60 | 13 | 18,5 | 6,5 | 8 | 12 | 5,5 | M5 | M5x16 | 0-150 |
| **K0916.06119** | 119 | 84 | 15 | 23 | 8 | 10 | 14 | 6,5 | M6 | M6x20 | 0-200 |

# Performance Curves

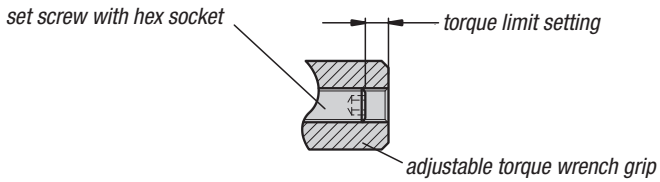


Pull Clamps K0910.3240...

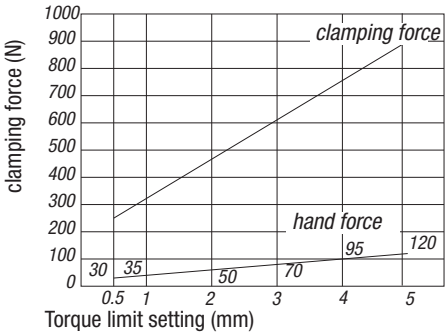


If clamping force is 900 N, Load-Setting Distance will be 5 mm. Hand force will be 120 N.

Pull Clamps K0910.4050...

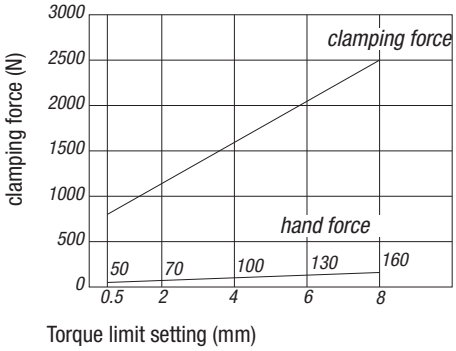


Swing Clamps K0912....3232

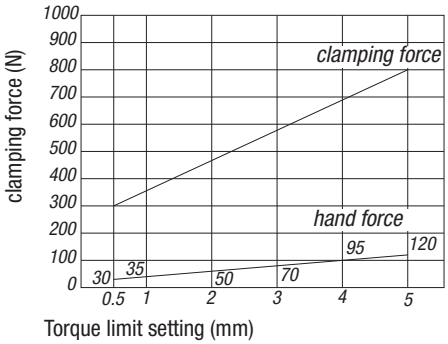


Swing Clamps K0912....4540

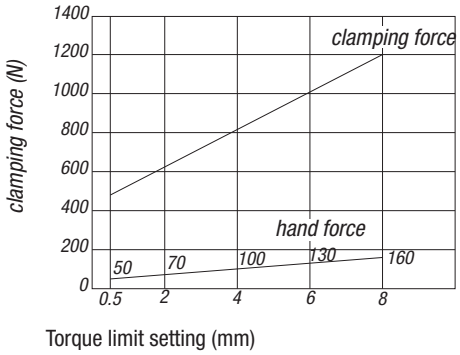


Side Clamps K0928.0500
Side Clamps K0928.0501

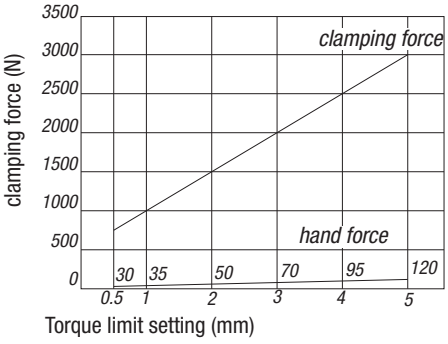


Side Clamps K0928.0800
Side Clamps K0928.0801

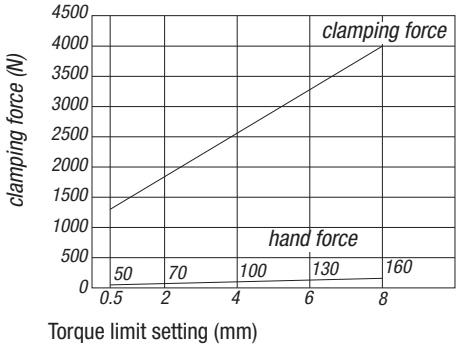


Note:
The above performance curves apply to degreased clamps

# One Touch Clamps high-force

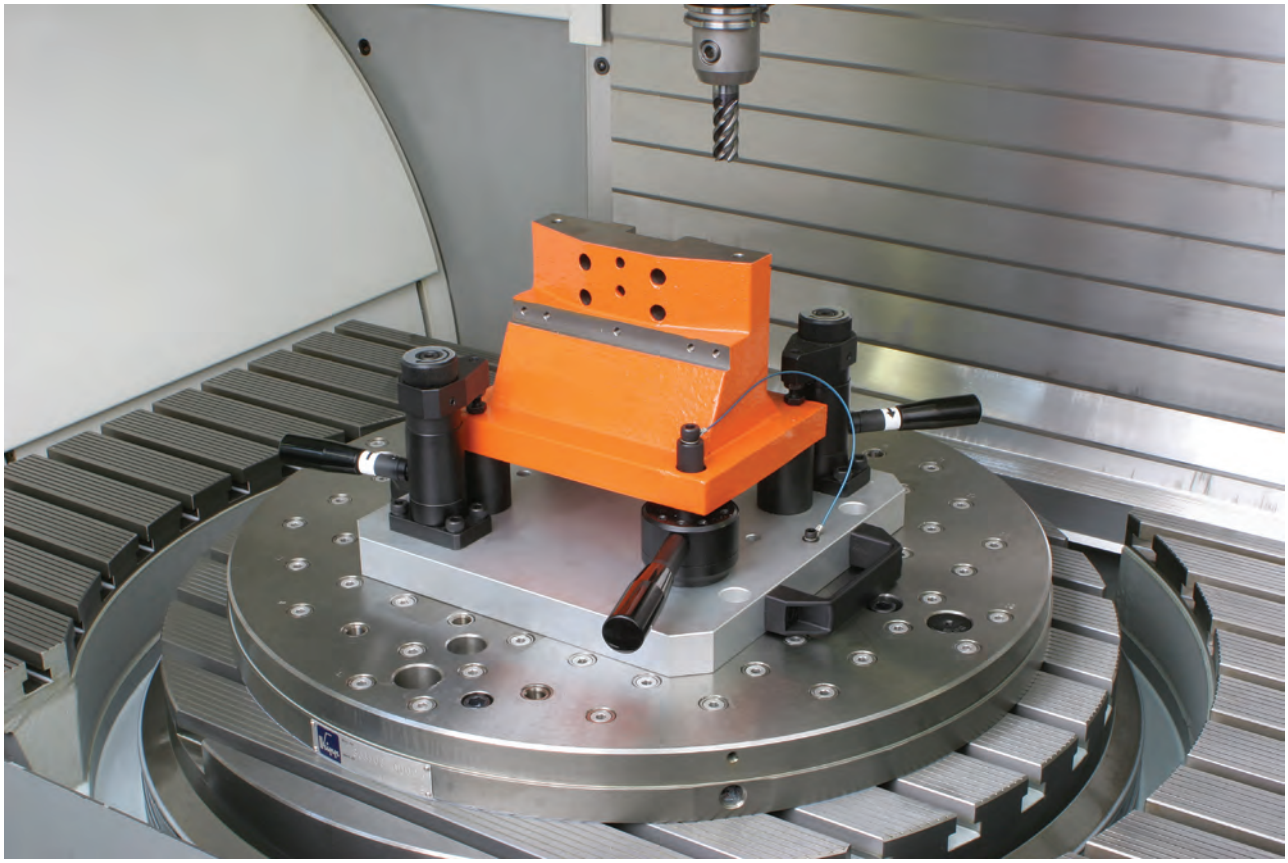

## Notes

KIRÁLY TRADING KFT H-1151 Budapest Mogyoród útja 12 - 14 tel: 061307-3801 Email:pzoli@kiralytrading.hu

# Positioning units

spring-loaded

Form A

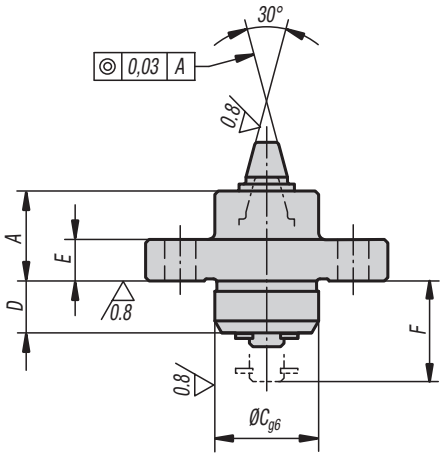


Form B

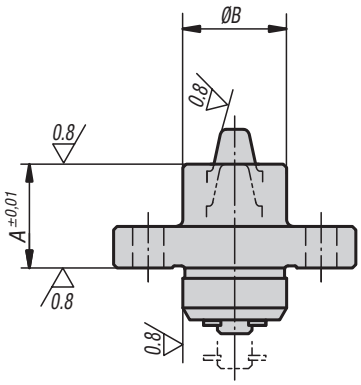


**Material, version:**
Body carbon steel, hardened and black oxidised.
Locating pin hardened tool steel.

**Sample order:**
K0917.15060

**Note:**
* The conical spigot can position holes within these limits.

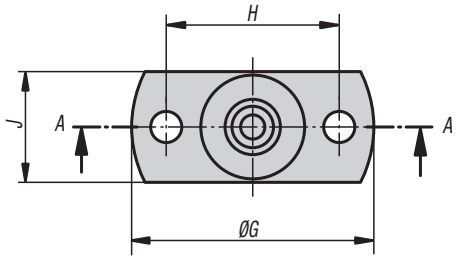


view A-A

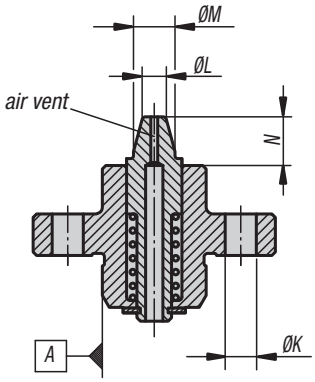


mounting hole

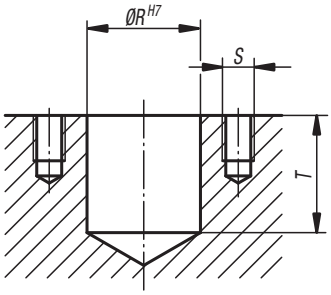


## KIPP Positioning units, spring-loaded

| Order No. | Form | A | B | C | D | E | F | G | H | J | K | L | M | N | R | S | T | Receiving hole | Spring force cone N | Approx. weight kg |
|---|---|---|---|---|---|---|---|---|---|---|---|---|---|---|---|---|---|---|---|---|
| **K0917.15060** | A | 13 | 15 | 15 | 7,5 | 6 | 15 | 35 | 25 | 16 | 4,5 | 3,5 | 6 | 7,4 | 15 | M4 | 16 | ø3,8 - ø5,2* | 6,4 - 19,3 | 0,045 |
| **K0917.15070** | A | 13 | 15 | 15 | 7,5 | 6 | 15 | 35 | 25 | 16 | 4,5 | 4,5 | 7 | 7,4 | 15 | M4 | 16 | ø4,8 - ø6,2* | 6,4 - 19,3 | 0,045 |
| **K0917.20090** | A | 18 | 20 | 20 | 10 | 8 | 20 | 40 | 30 | 22 | 4,5 | 5,5 | 9 | 9,3 | 20 | M4 | 21 | ø5,8 - ø8,2* | 5,5 - 20,5 | 0,095 |
| **K0917.20110** | A | 18 | 20 | 20 | 10 | 8 | 20 | 40 | 30 | 22 | 4,5 | 7,5 | 11 | 9,3 | 20 | M4 | 21 | ø7,8 - ø10,2* | 5,5 - 20,5 | 0,095 |

| Order No. | Form | A | B | C | D | E | F | G | H | J | K | L | M | N | R | S | T | Receiving hole | Spring force cone N | Approx. weight kg |
|---|---|---|---|---|---|---|---|---|---|---|---|---|---|---|---|---|---|---|---|---|
| **K0917.15061** | B | 15 | 15 | 15 | 7,5 | 6 | 15 | 35 | 25 | 16 | 4,5 | 3,5 | 6 | 5,4 | 15 | M4 | 16 | ø3,8 - ø5,2* | 6,4 - 19,3 | 0,050 |
| **K0917.15071** | B | 15 | 15 | 15 | 7,5 | 6 | 15 | 35 | 25 | 16 | 4,5 | 4,5 | 7 | 5,4 | 15 | M4 | 16 | ø4,8 - ø6,2* | 6,4 - 19,3 | 0,050 |
| **K0917.20091** | B | 20 | 20 | 20 | 10 | 8 | 20 | 40 | 30 | 22 | 4,5 | 5,5 | 9 | 7,3 | 20 | M4 | 21 | ø5,8 - ø8,2* | 5,5 - 20,5 | 0,100 |
| **K0917.20111** | B | 20 | 20 | 20 | 10 | 8 | 20 | 40 | 30 | 22 | 4,5 | 7,5 | 11 | 7,3 | 20 | M4 | 21 | ø7,8 - ø10,2* | 5,5 - 20,5 | 0,100 |

KIRÁLY TRADING KFT H-1151 Budapest Mogyoród útja 12 - 14 tel: 061307-3801 Email:pzoli@kiralytrading.hu

# Technical information

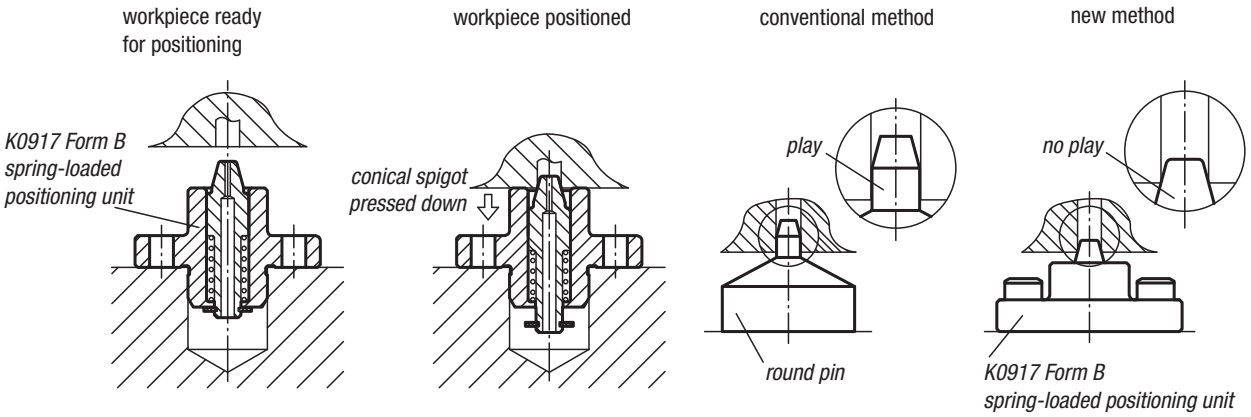


The conical spigot is pushed down when the workpiece is mounted on the positioning unit.

The conical spigot ensures precise positioning.

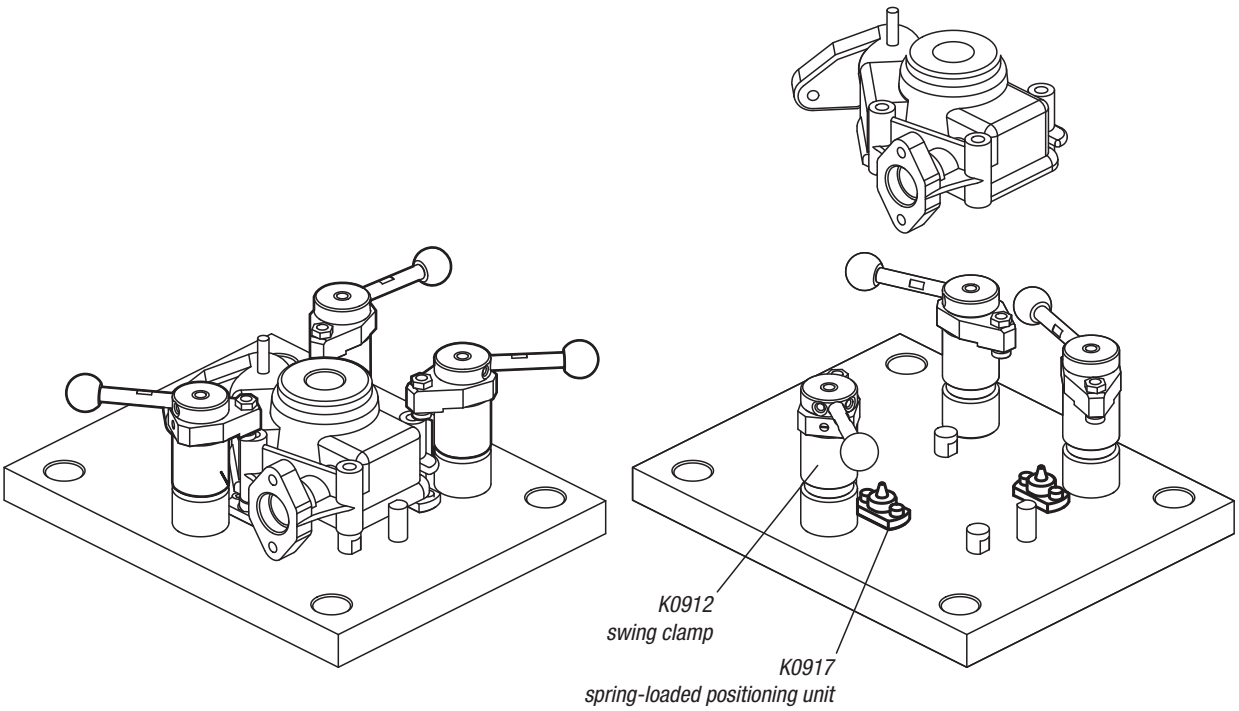


Note:
To prevent the positioning unit lifting the workpiece, hold it down by hand when loosening the swing clamp.

KIRÁLY TRADING KFT H-1151 Budapest Mogyoród útja 12 - 14 tel: 061307-3801 Email:pzoli@kiralytrading.hu

# Positioning units

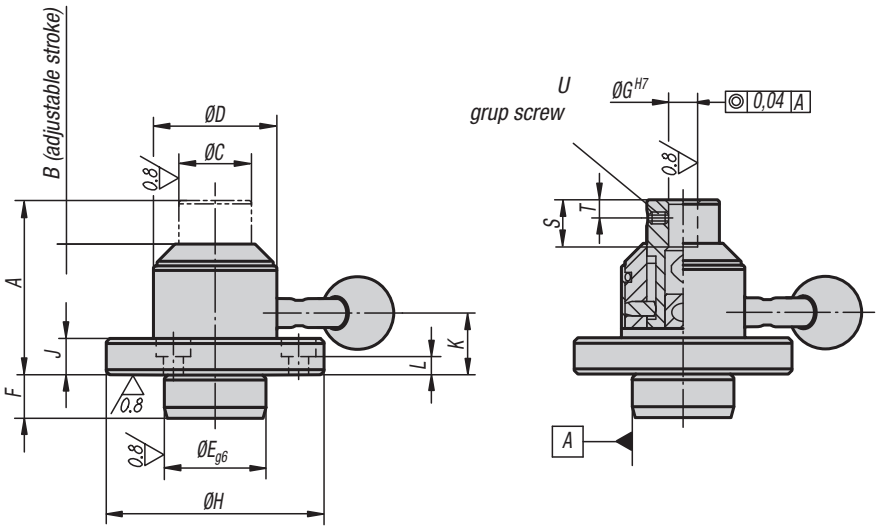


**Material, version:**
Body and locating pin carbon steel, tempered and black oxidised.
Handle carbon steel, tempered.
Ball knob black Duroplast PF 31.

**Sample order:**
K0918.2808

**Note:**
* Admissible hand force for the handle.
** Workpieces up to this weight can be located.

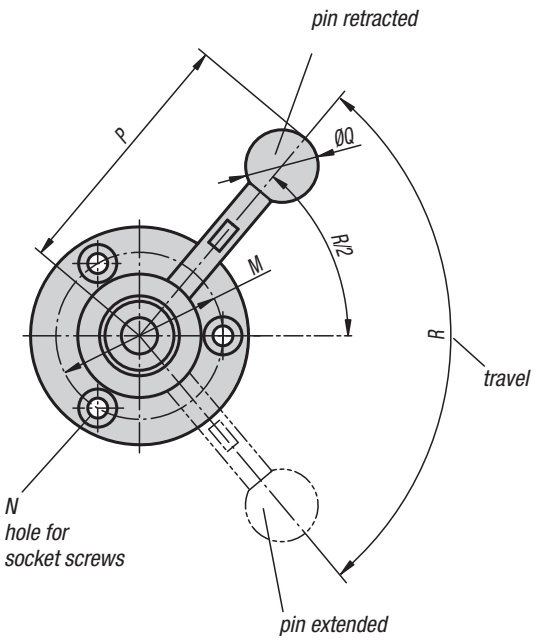


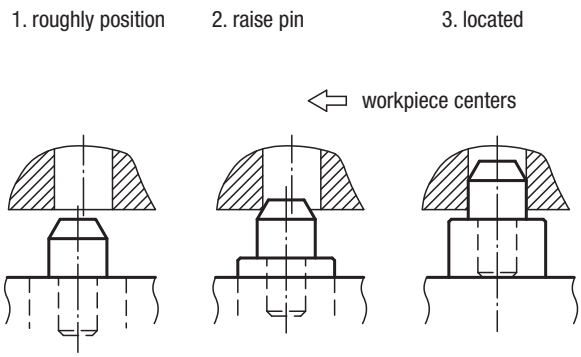


## KIPP Positioning units

| Order No. | A | B | C | D | E | F | G | H | J | K | L | M | N | P | Q | R | S | T | U | Hand force N | Max. workpiece weight kg | Approx. weight kg |
|---|---|---|---|---|---|---|---|---|---|---|---|---|---|---|---|---|---|---|---|---|---|---|
| **K0918.2808** | 48 | 12 | 20 | 34 | 28 | 12 | 8 | 60 | 10 | 17 | 5 | 46 | M5 | 71 | 20 | 100 | 13 | 5 | M4x5 | 150* | 250** | 0,420 |
| **K0918.4212** | 61 | 15 | 30 | 48 | 42 | 14 | 12 | 80 | 13 | 23 | 7 | 63 | M6 | 94 | 25 | 90 | 15 | 8 | M6x8 | 200* | 300** | 1,040 |

KIRÁLY TRADING KFT H-1151 Budapest Mogyoród útja 12 - 14 tel: 061307-3801 Email:pzoli@kiralytrading.hu

# Workpiece supports

adjustable

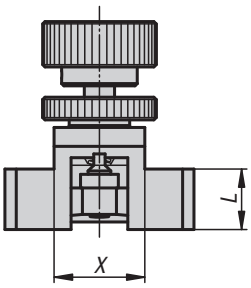


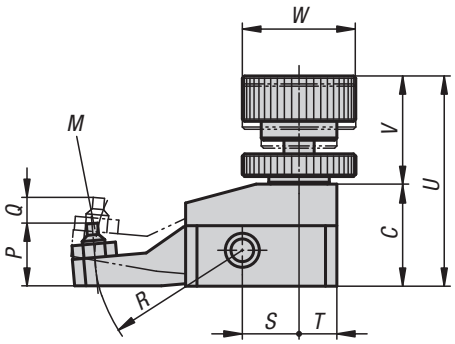


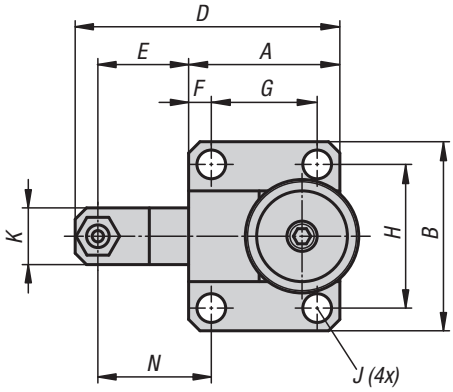


**Material:**
Carbon steel 1.0503.

**Version:**
Black oxidised.

**Sample order:**
K0919.08020

**Note:**
Workpiece supports are for supporting overhanging workpiece parts to prevent vibrations and bending during machining.
They should not be subjected to strong forces from a clamping element and are not intended as supports under a clamping point.

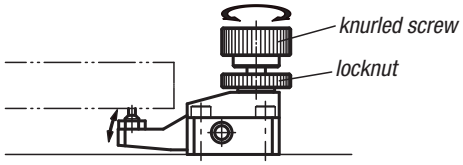


1.) Turning the knurled screw moves the support arm up or down.
2.) Once the rest is in contact with the worpiece, the screw can be locked with the locknut.

## KIPP Workpiece supports, adjustable

| Order No. | A | B | C | D | E | F | G | H | J | K | L | M | N | P | Q | R | S | T | U | V | W | X | Clamping force N | Tightening torque max. Nm |
|---|---|---|---|---|---|---|---|---|---|---|---|---|---|---|---|---|---|---|---|---|---|---|---|---|
| **K0919.08020** | 40 | 50 | 27 | 70 | 24 | 6 | 28 | 38 | 6,6 | 15 | 16 | M6x16 | 30 | 17 | 6 | 39 | 15 | 10 | 56 | 29 | 30 | 24 | 300 | 1,5 |
| **K0919.10027** | 55 | 65 | 34 | 95 | 31,5 | 8,5 | 38 | 48 | 9 | 18 | 20 | M8x22 | 40 | 23 | 8 | 51,5 | 20 | 15 | 68 | 34 | 36 | 29 | 350 | 2 |

KIRÁLY TRADING KFT H-1151 Budapest Mogyoród útja 12 - 14 tel: 061307-3801 Email:pzoli@kiralytrading.hu

# Workpiece supports

adjustable

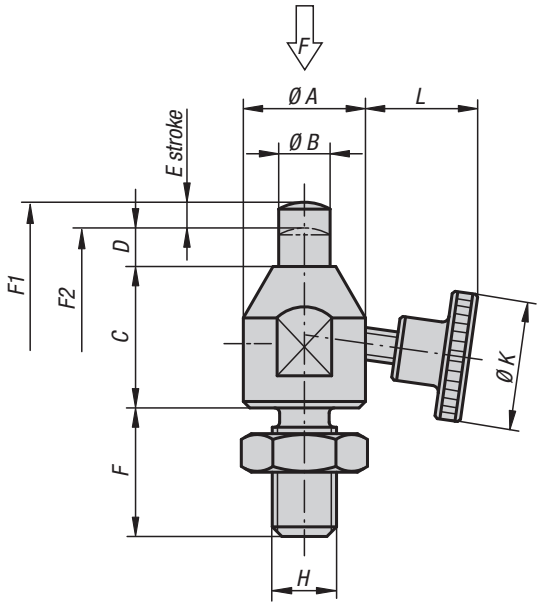


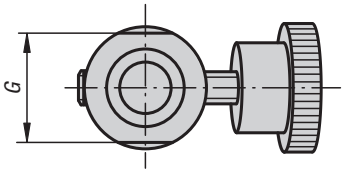


**Material:**
Carbon steel.

**Version:**
Body black oxidised.
Rest pad hardened and black oxidised.

**Sample order:**
K0920.08023

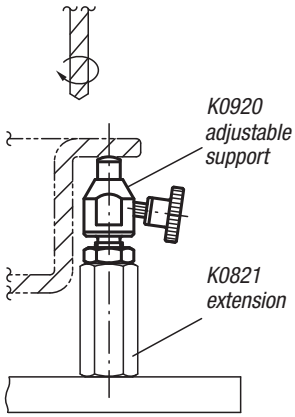


## KIPP Workpiece supports, adjustable

| Order No. | A | B | C | D | E | F | G | H | K | L | F N | Spring force initial pressure F1 approx. N | Spring force final pressure F2 approx. N |
|---|---|---|---|---|---|---|---|---|---|---|---|---|---|
| **K0920.08023** | 15 | 6 | 18 | 5 | 3 | 16 | 13 | M8 | 20 | 13,2 | 200 | 1,5 | 3 |
| **K0920.10028** | 19 | 8 | 22 | 6 | 4 | 20 | 17 | M10 | 25 | 16,3 | 300 | 1,8 | 3 |
| **K0920.12031** | 22 | 10 | 25 | 6 | 4 | 24 | 19 | M12 | 28 | 22,3 | 400 | 1,8 | 3 |

KIRÁLY TRADING KFT H-1151 Budapest Mogyoród útja 12 - 14 tel: 061307-3801 Email:pzoli@kiralytrading.hu

# Workpiece supports

**Material:**
Carbon steel.

**Version:**
Body black oxidised.
Thrust pin tempered and black oxidised.

**Sample order:**
K0921.06029

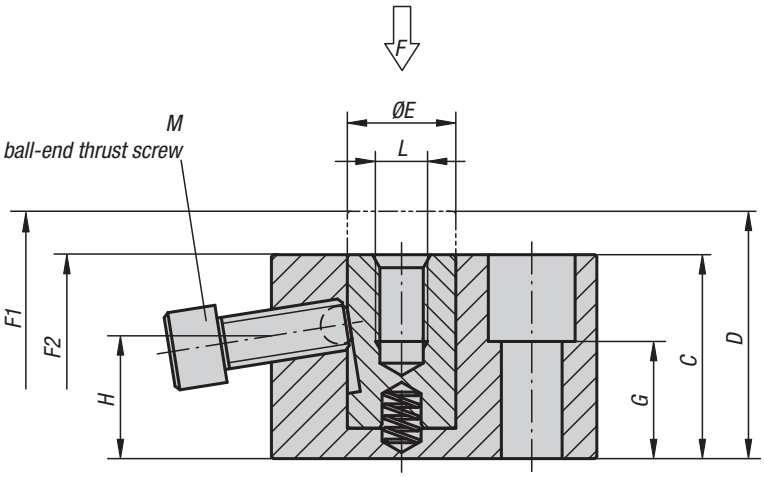


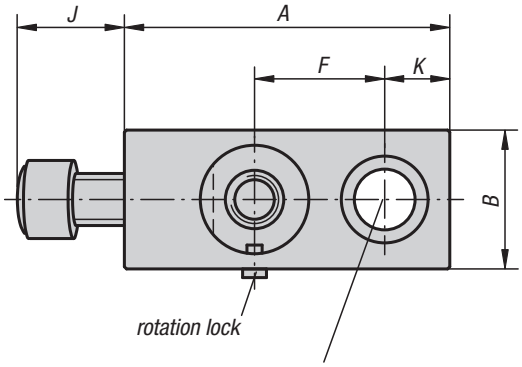


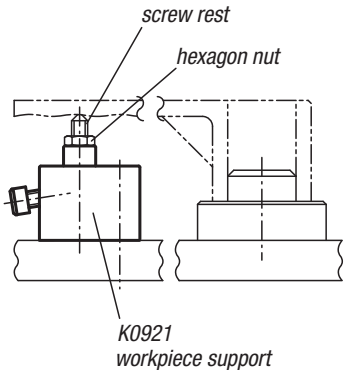


## KIPP Workpiece supports

| Order No. | A | B | C | D | E | F | G | H | J | K | L | M | N | F N | Spring force initial pressure F1 approx. N | Spring force final pressure F2 approx. N |
|---|---|---|---|---|---|---|---|---|---|---|---|---|---|---|---|---|
| **K0921.06029** | 38 | 19 | 29 | 35 | 12 | 15 | 15 | 17,6 | 13 | 8 | M6x10 | M6x16 | M6 | 4000 | 0 | 6 |
| **K0921.08037** | 50 | 22 | 37 | 47 | 16 | 20 | 20 | 21,1 | 16 | 10 | M8x15 | M8x20 | M8 | 6000 | 0 | 7 |
| **K0921.12047** | 75 | 32 | 47 | 57 | 25 | 30 | 27 | 28,3 | 25 | 15 | M12x20 | M12x30 | M12 | 9000 | 1 | 11 |

KIRÁLY TRADING KFT H-1151 Budapest Mogyoród útja 12 - 14 tel: 061307-3801 Email:pzoli@kiralytrading.hu

# Workpiece support cylinders

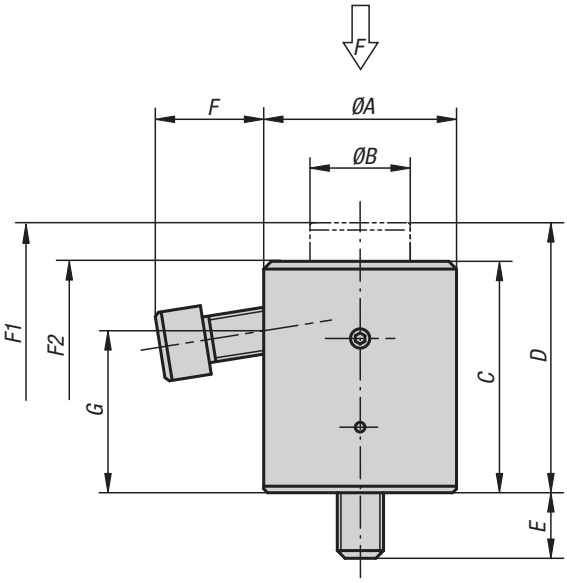


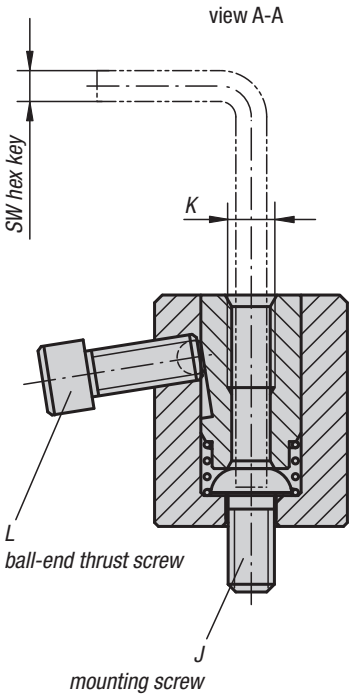


**Material:**
Carbon steel.

**Version:**
Body black oxidised.
Thrust pin hardened and black oxidised.

**Sample order:**
K0922.06039

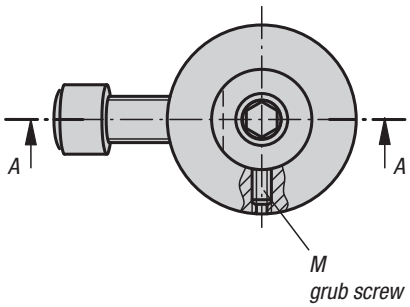


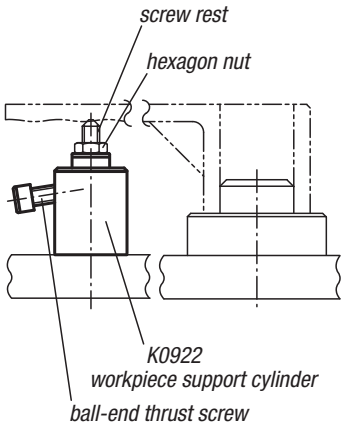


## KIPP Workpiece support cylinders

| Order No. | A | B | C | D | E | F | G | J | K | L | M | SW | F N | Spring force initial pressure F1 approx. N | Spring force final pressure F2 approx. N |
|---|---|---|---|---|---|---|---|---|---|---|---|---|---|---|---|
| **K0922.06039** | 28 | 14 | 33 | 39 | 10 | 13,1 | 22,2 | M6 | M6x12 | M6x16 | M4x8 | 4 | 4000 | 10 | 22 |
| **K0922.08052** | 35 | 19 | 42 | 52 | 14 | 17,2 | 27,5 | M8 | M8x16 | M8x20 | M4x8 | 5 | 6000 | 10 | 27 |
| **K0922.12070** | 50 | 26 | 60 | 70 | 16 | 28,1 | 42,1 | M12 | M12x24 | M12x30 | M5x12 | 8 | 9000 | 15 | 30 |
| **K0922.16080** | 60 | 33 | 70 | 80 | 22 | 26,6 | 47,4 | M16 | M16x32 | M12x30 | M5x15 | 10 | 9000 | 15 | 35 |

KIRÁLY TRADING KFT H-1151 Budapest Mogyoród útja 12 - 14 tel: 061307-3801 Email:pzoli@kiralytrading.hu

# Jack screws

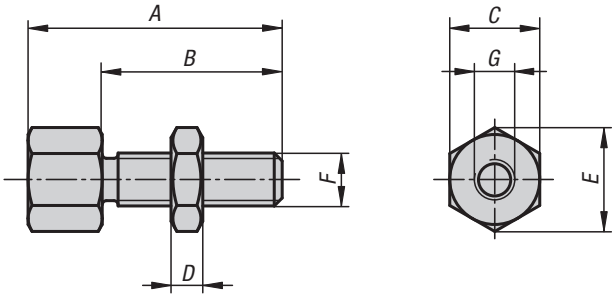


**Material:**
Carbon steel.

**Version:**
Black oxidised.

**Sample order:**
K0308.0803006

Adjustable support, accepts various inserts.

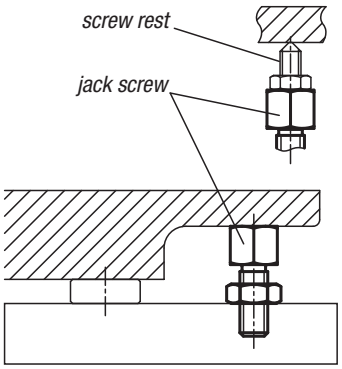


## KIPP Jack screws

| Order No. | A | B | C | D | E | F | G |
|---|---|---|---|---|---|---|---|
| K0308.0803006 | 30 | 20 | 13 | 5 | 14,4 | M8 | M6x6 |
| K0308.0804006 | 40 | 30 | 13 | 5 | 14,4 | M8 | M6x6 |
| K0308.1003808 | 38 | 24 | 17 | 6 | 18,9 | M10 | M8x8 |
| K0308.1004808 | 48 | 34 | 17 | 6 | 18,9 | M10 | M8x8 |
| K0308.1205110 | 51 | 33 | 22 | 7 | 24,5 | M12 | M10x10 |
| K0308.1206610 | 66 | 48 | 22 | 7 | 24,5 | M12 | M10x10 |
| K0308.1606212 | 62 | 40 | 27 | 10 | 30,1 | M16 | M12x12 |
| K0308.1607712 | 77 | 55 | 27 | 10 | 30,1 | M16 | M12x12 |

KIRÁLY TRADING KFT H-1151 Budapest Mogyoród útja 12 - 14 tel: 061307-3801 Email:pzoli@kiralytrading.hu

# Jack screws extended

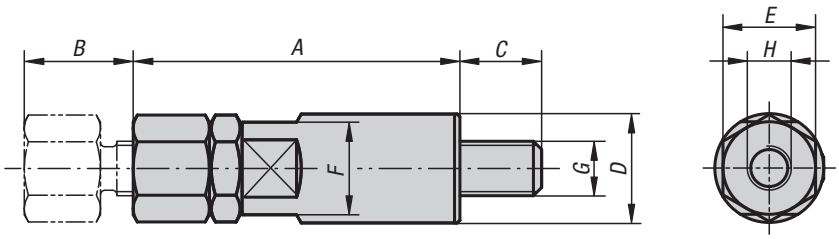


**Material:**
Carbon steel.

**Version:**
Black oxidised.

**Sample order:**
K0923.08040

Adjustable support that accepts various rests.

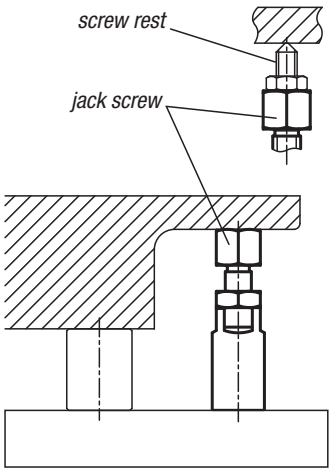


## KIPP Jack screws extended

| Order No. | A | B | C | D | E | F | G | H |
|---|---|---|---|---|---|---|---|---|
| **K0923.08040** | 40 | 10 | 12 | 16 | 13 | 13 | M8 | M6x6 |
| **K0923.08050** | 50 | 20 | 12 | 16 | 13 | 13 | M8 | M6x6 |
| **K0923.10050** | 50 | 10 | 14 | 20 | 17 | 17 | M10 | M8x8 |
| **K0923.10060** | 60 | 20 | 14 | 20 | 17 | 17 | M10 | M8x8 |
| **K0923.12065** | 65 | 15 | 19 | 24 | 22 | 22 | M12 | M10x10 |
| **K0923.12080** | 80 | 30 | 19 | 24 | 22 | 22 | M12 | M10x10 |
| **K0923.16080** | 80 | 15 | 24 | 32 | 27 | 27 | M16 | M12x12 |
| **K0923.16095** | 95 | 30 | 24 | 32 | 27 | 27 | M16 | M12x12 |

KIRÁLY TRADING KFT H-1151 Budapest Mogyoród útja 12 - 14 tel: 061307-3801 Email:pzoli@kiralytrading.hu

# Extensions for jack screws

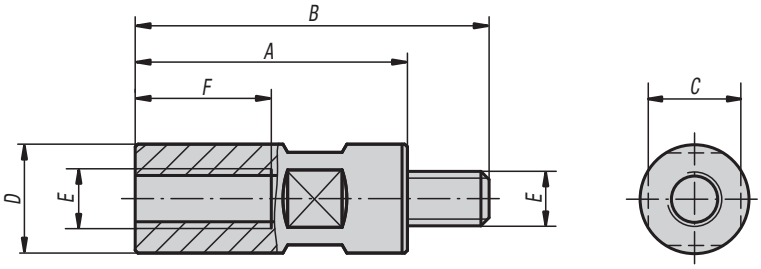


**Material:**
Carbon steel.

**Version:**
Black oxidised.

**Sample order:**
K0924.08032

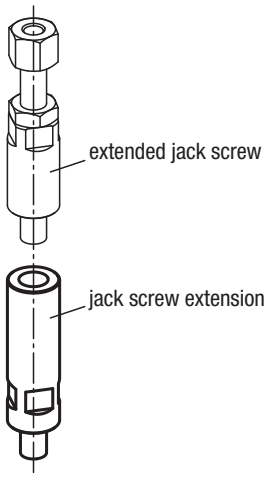


## KIPP Extensions for jack screws

| Order No. | A | B | C | D | E | F | Approx. weight kg |
|---|---|---|---|---|---|---|---|
| K0924.08032 | 32 | 44 | 13 | 16 | M8 | 20 | 0,045 |
| K0924.08040 | 40 | 52 | 13 | 16 | M8 | 20 | 0,055 |
| K0924.08050 | 50 | 62 | 13 | 16 | M8 | 20 | 0,070 |
| K0924.08065 | 65 | 77 | 13 | 16 | M8 | 20 | 0,090 |
| K0924.08080 | 80 | 92 | 13 | 16 | M8 | 20 | 0,115 |
| K0924.08100 | 100 | 112 | 13 | 16 | M8 | 20 | 0,145 |
| K0924.10040 | 40 | 54 | 17 | 20 | M10 | 25 | 0,085 |
| K0924.10050 | 50 | 64 | 17 | 20 | M10 | 25 | 0,105 |
| K0924.10065 | 65 | 79 | 17 | 20 | M10 | 25 | 0,145 |
| K0924.10080 | 80 | 94 | 17 | 20 | M10 | 25 | 0,180 |
| K0924.10100 | 100 | 114 | 17 | 20 | M10 | 25 | 0,230 |
| K0924.12050 | 50 | 69 | 22 | 24 | M12 | 30 | 0,160 |
| K0924.12065 | 65 | 84 | 22 | 24 | M12 | 30 | 0,200 |
| K0924.12080 | 80 | 99 | 22 | 24 | M12 | 30 | 0,255 |
| K0924.12100 | 100 | 119 | 22 | 24 | M12 | 30 | 0,325 |
| K0924.12125 | 125 | 144 | 22 | 24 | M12 | 30 | 0,415 |
| K0924.12160 | 160 | 179 | 22 | 24 | M12 | 30 | 0,540 |
| K0924.16050 | 50 | 74 | 27 | 32 | M16 | 32 | 0,280 |
| K0924.16065 | 65 | 89 | 27 | 32 | M16 | 40 | 0,350 |
| K0924.16080 | 80 | 104 | 27 | 32 | M16 | 40 | 0,430 |
| K0924.16100 | 100 | 124 | 27 | 32 | M16 | 40 | 0,560 |
| K0924.16125 | 125 | 149 | 27 | 32 | M16 | 40 | 0,715 |
| K0924.16160 | 160 | 184 | 27 | 32 | M16 | 40 | 0,935 |

KIRÁLY TRADING KFT H-1151 Budapest Mogyoród útja 12 - 14 tel: 061307-3801 Email:pzoli@kiralytrading.hu

# Swing clamps

mini, with cam lever

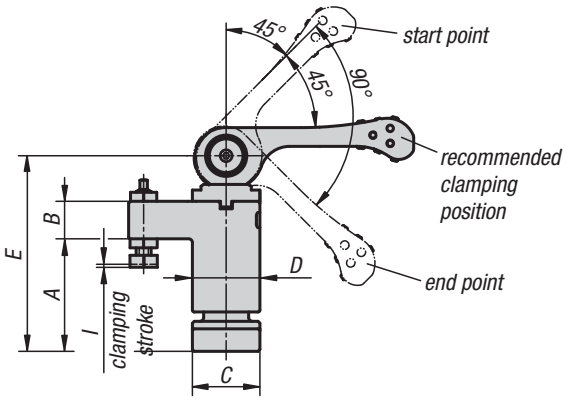


Right hand

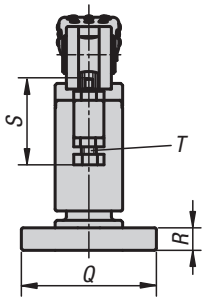


Left hand

**Material:**
Carbon steel.

**Version:**
Tempered and black oxidised.

**Sample order:**
K0925.0100

**Note:**
Swing clamps are used where the clamping points must be free when the workpiece is loaded or removed.

* Admissible hand force for the handle.

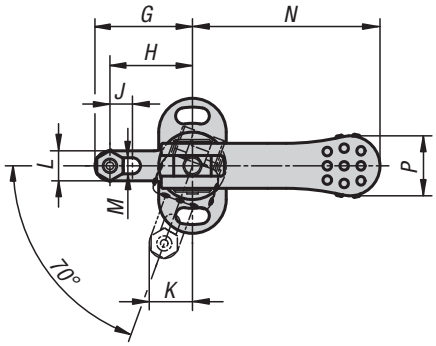


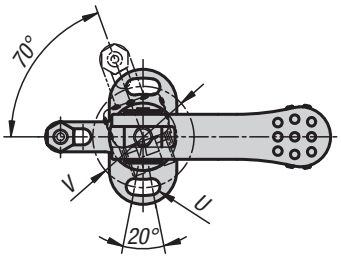


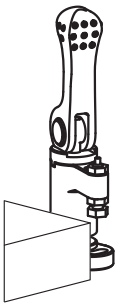

unclamped

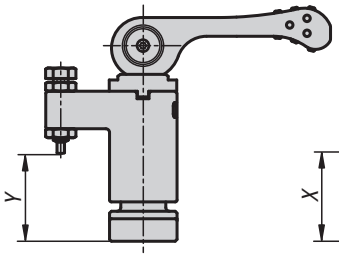


clamping
rough surfaces

clamping
machined surfaces

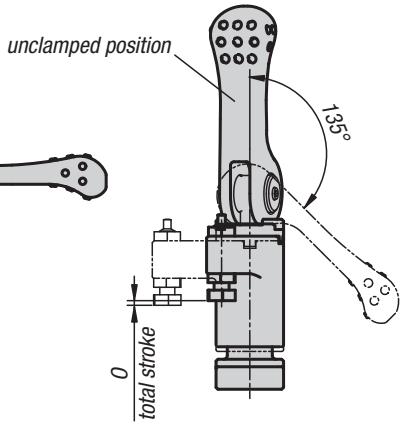


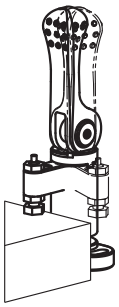

swivel

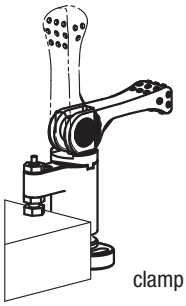

clamp

## KIPP Swing clamps, mini, with cam lever

| Order No. left-hand type | Order No. right-hand type | A | B | C | D | E | G | H | I | J | K | L | M | N | O | P | Q | R | S | T | U | V | X min. | X max. | Y min. | Y max. | Clamping force N | Hand force N |
|---|---|---|---|---|---|---|---|---|---|---|---|---|---|---|---|---|---|---|---|---|---|---|---|---|---|---|---|---|
| **K0925.0100** | **K0925.1100** | 30 | 10 | 18 | 18 | 52 | 26 | 22 | 0,8 | 6 | 11,5 | 8 | 4,3 | 50 | 1,2 | 16 | 36 | 6 | 22,8 | M4 | 4,3 | 27 | 22,4 | 25,2 | 22 | 24,8 | 800 | 100* |
| **K0925.0150** | **K0925.1150** | 40 | 14 | 23 | 23 | 68 | 35 | 30 | 1 | 8 | 15,3 | 10 | 5,3 | 63 | 1,5 | 19 | 45 | 8 | 28,5 | M5 | 5,3 | 34 | 30,8 | 33,8 | 31,7 | 34,7 | 1500 | 150* |
| **K0925.0200** | **K0925.1200** | 50 | 18 | 30 | 30 | 87 | 45 | 37 | 1,2 | 8 | 20,7 | 16 | 8,4 | 80 | 1,8 | 24 | 65 | 12 | 45,5 | M8 | 8,4 | 48 | 31,9 | 39,6 | 32,9 | 40,6 | 2100 | 200* |
| **K0925.0300** | **K0925.1300** | 60 | 22 | 40 | 40 | 107 | 55 | 45 | 1,5 | 8 | 25,4 | 20 | 10,4 | 100 | 2,3 | 30 | 85 | 15 | 57 | M10 | 10,5 | 64 | 35,7 | 46,7 | 38,2 | 49,2 | 2800 | 300* |

KIRÁLY TRADING KFT H-1151 Budapest Mogyoród útja 12 - 14 tel: 061307-3801 Email:pzoli@kiralytrading.hu

# Swing clamps mini

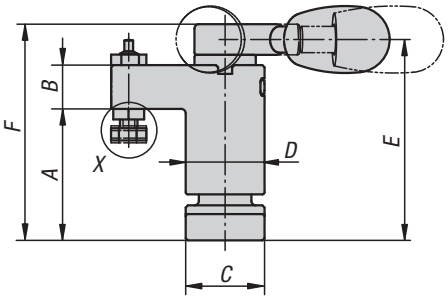


Right hand

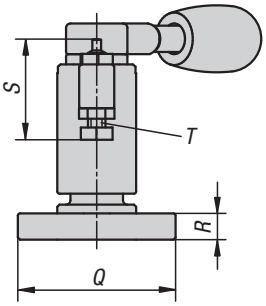


Left hand

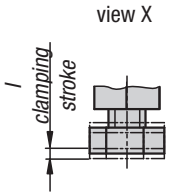

**Material:**
Carbon steel.
Grip plastic.

**Version:**
Tempered, black oxidised.
Grip black.

**Sample order:**
K0926.0100

**Note:**
Swing clamps are used where the clamping points must be free when the workpiece is loaded or removed.

* Admissible hand force for the handle.

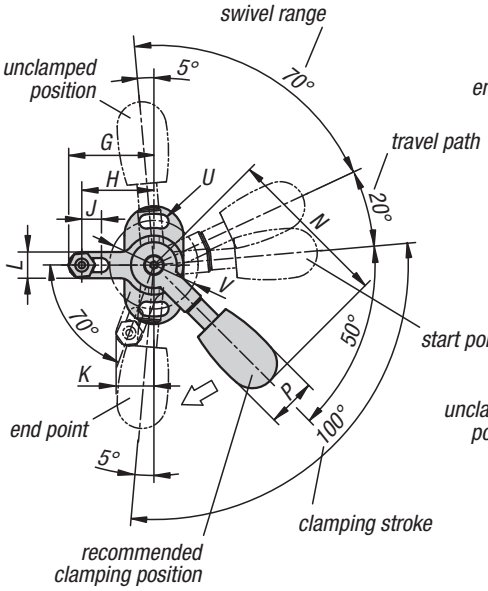


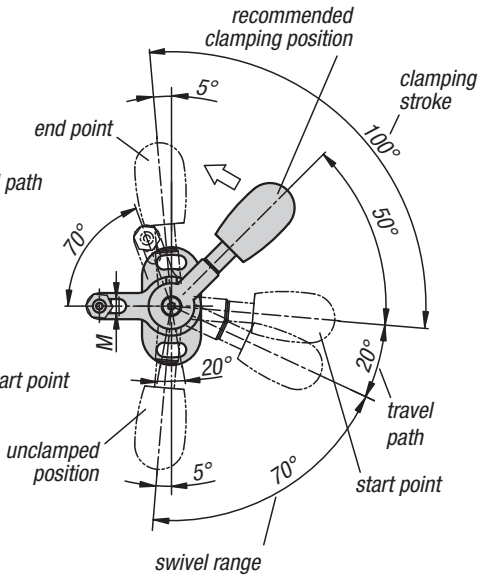


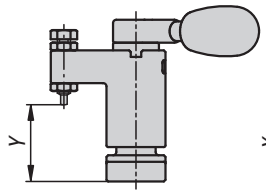


clamping
rough faces

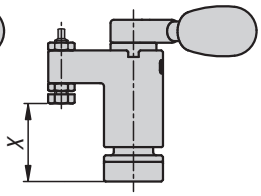


clamping
machined faces

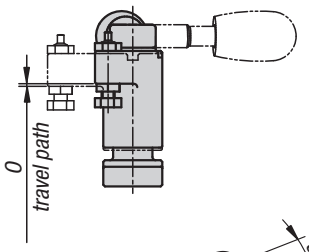


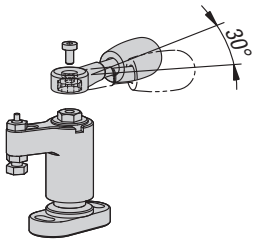


The position of the grip can be adjusted in 30° increments

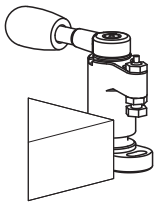

unclamped

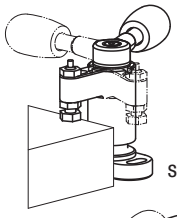

swivel

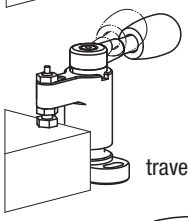

travel path

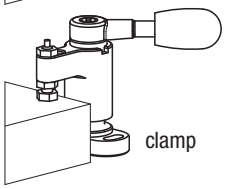

clamp

## KIPP Swing clamps mini

| Order No. left-hand type | Order No. right-hand type | A | B | C | D | E | F | G | H | I | J | K | L | M | N | O | P | Q | R | S | T | U | V | X min. | X max. | Y min. | Y max. | Clamping force N | Hand force N |
|---|---|---|---|---|---|---|---|---|---|---|---|---|---|---|---|---|---|---|---|---|---|---|---|---|---|---|---|---|---|
| **K0926.0100** | **K0926.1100** | 30 | 10 | 18 | 18 | 45,8 | 49 | 26 | 22 | 1 | 6 | 11,5 | 8 | 4,3 | 50 | 0,8 | 15 | 36 | 6 | 22,8 | M4 | 4,3 | 27 | 22,3 | 25,3 | 21,9 | 24,9 | 1100 | 100* |
| **K0926.0150** | **K0926.1150** | 40 | 14 | 23 | 23 | 61,3 | 66 | 35 | 30 | 1,4 | 8 | 15,3 | 10 | 5,3 | 63 | 1,1 | 20 | 45 | 8 | 28,5 | M5 | 5,3 | 34 | 30,6 | 34 | 31,5 | 34,9 | 1800 | 150* |
| **K0926.0200** | **K0926.1200** | 50 | 18 | 30 | 30 | 76,5 | 82 | 45 | 37 | 1,5 | 8 | 20,7 | 16 | 8,4 | 80 | 1,4 | 26 | 65 | 12 | 45,5 | M8 | 8,4 | 48 | 31,7 | 39,7 | 32,7 | 40,7 | 2200 | 200* |
| **K0926.0300** | **K0926.1300** | 60 | 22 | 40 | 40 | 93 | 100 | 55 | 45 | 1,9 | 8 | 25,4 | 20 | 10,4 | 100 | 1,7 | 33 | 85 | 15 | 57 | M10 | 10,5 | 64 | 35,5 | 46,9 | 38 | 49,4 | 3500 | 300* |

KIRÁLY TRADING KFT H-1151 Budapest Mogyoród útja 12 - 14 tel: 061307-3801 Email:pzoli@kiralytrading.hu

# Swivel hold-down clamp

mini, with cam lever

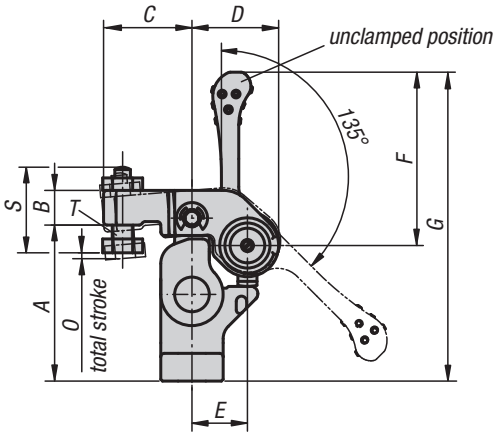


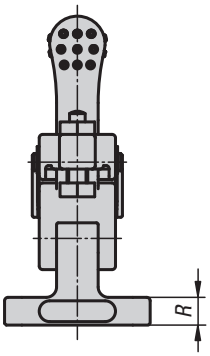

**Material:**
Carbon steel.

**Sample order:**
K0927.100

**Note:**
Swing clamps are used where the clamping points must be free when the workpiece is loaded or removed.

* Admissible hand force for the handle.

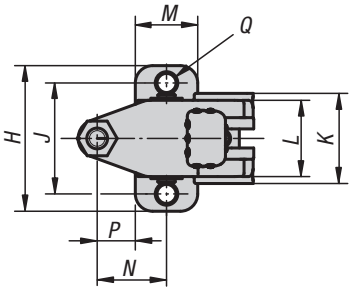


view X

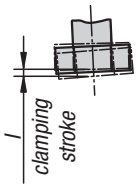


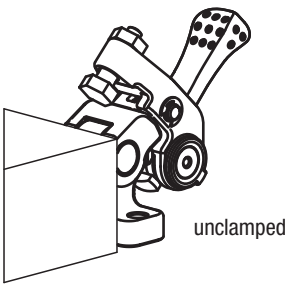


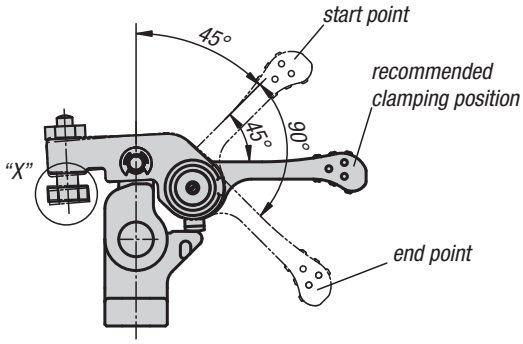


unclamped

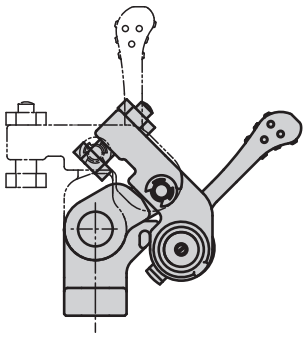

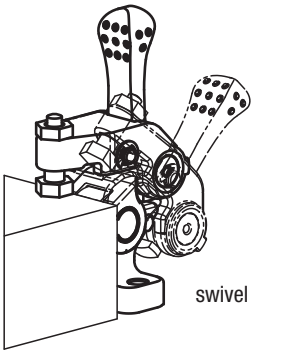


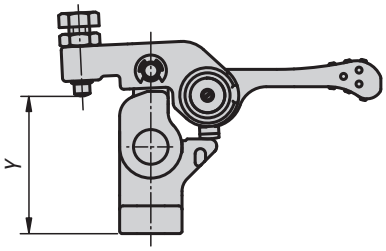


clamping
rough faces

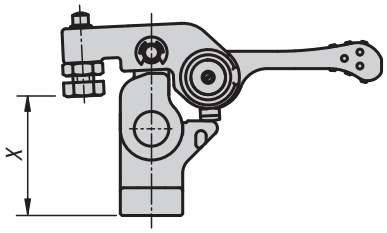


clamping
machined faces

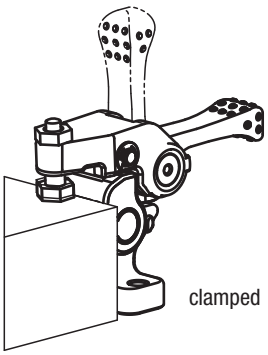


## KIPP Swivel hold-down clamp, mini, with cam lever

| Order No. | A | B | C | D | E | F | G | H | I | J | K | L | M | N | O | P | Q | R | S | T | X min. | X max. | Y min. | Y max. | Clamping force N | Hand force N |
|---|---|---|---|---|---|---|---|---|---|---|---|---|---|---|---|---|---|---|---|---|---|---|---|---|---|---|
| **K0927.100** | 45 | 10 | 25,5 | 25 | 16 | 50 | 89 | 42 | 1 | 32 | 26 | 22 | 18 | 20 | 1,5 | 11 | 5,5 | 8 | 24 | M6 | 31,5 | 40,5 | 34,5 | 43,5 | 700 | 100* |
| **K0927.150** | 55 | 12 | 32 | 31 | 20 | 63 | 109 | 52 | 1,2 | 40 | 32 | 28 | 22 | 25 | 1,8 | 14 | 6,6 | 10 | 30,5 | M8 | 36,4 | 48,6 | 41,4 | 53,6 | 1100 | 150* |

KIRÁLY TRADING KFT H-1151 Budapest Mogyoród útja 12 - 14 tel: 061307-3801 Email:pzoli@kiralytrading.hu

# Side clamps

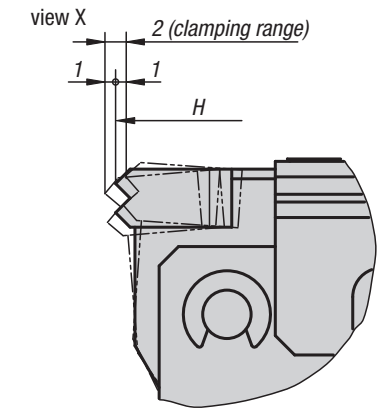


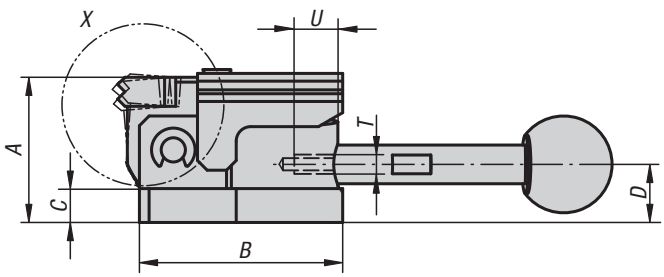


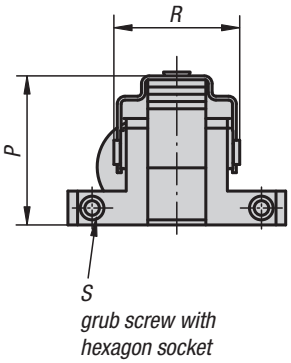


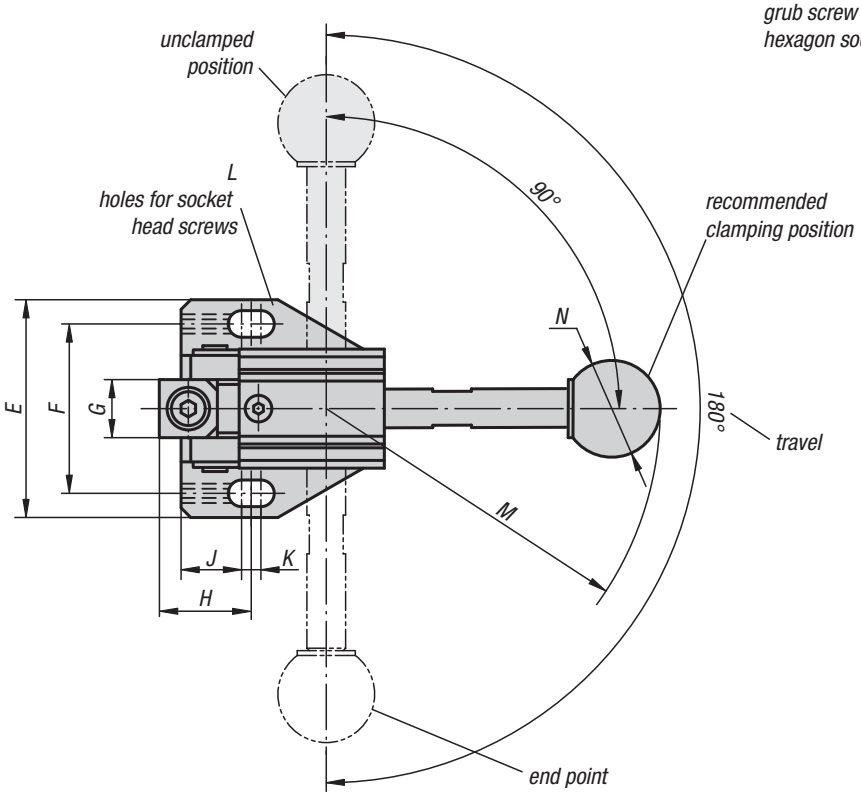

**Material:**
Body and grip carbon steel.
Jaw and cam tool steel.
Ball knob Duroplast PF 31.

**Version:**
Body, jaw and cam hardened and black oxidised.
Grip black oxidised.
Ball knob black.

**Sample order:**
K0928.0501

**Note:**
* Permitted hand force for grip.

**Accessories:**
Standard handles K0915.
Screw-in handles with adjustable torque K0916.

Technical information:

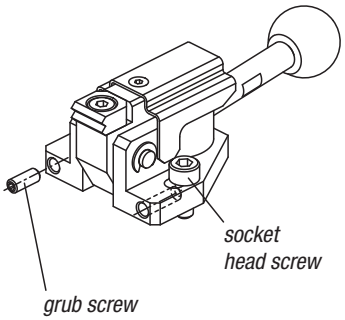


The slots allow final adjustment of the clamping range. Tightening the grub screws in the front of the body prevents the clamp sliding back during clamping.

## KIPP Side clamps

| Order No. | Version | A | B | C | D | E | F | G | H | J | K | L | M | N | P | R | S | T | U | Clamping force N | Hand force N |
|---|---|---|---|---|---|---|---|---|---|---|---|---|---|---|---|---|---|---|---|---|---|
| **K0928.0500** | without grip | 30 | 42 | 7 | 12 | 45 | 35 | 12 | 19 | 12,5 | 4 | M5 | 69 | 20 | 31 | 26 | M4x10 | M5 | 7 | 3000 | 150* |
| **K0928.0501** | with grip | 30 | 42 | 7 | 12 | 45 | 35 | 12 | 19 | 12,5 | 4 | M5 | 69 | 20 | 31 | 26 | M4x10 | M5 | 7 | 3000 | 150* |
| **K0928.0800** | without grip | 40 | 62 | 10 | 16 | 65 | 50 | 16 | 28 | 18,5 | 5 | M8 | 104 | 25 | 41 | 38 | M4x15 | M6 | 9,5 | 4000 | 200* |
| **K0928.0801** | with grip | 40 | 62 | 10 | 16 | 65 | 50 | 16 | 28 | 18,5 | 5 | M8 | 104 | 25 | 41 | 38 | M4x15 | M6 | 9,5 | 4000 | 200* |

KIRÁLY TRADING KFT H-1151 Budapest Mogyoród útja 12 - 14 tel: 061307-3801 Email:pzoli@kiralytrading.hu

# Side clamps

**Material:**
Housing and arm carbon steel.
Jaw tool steel.

**Version:**
Housing, black oxidised.
Arm and jaw tempered and black oxidised.

**Sample order:**
K0929.080400

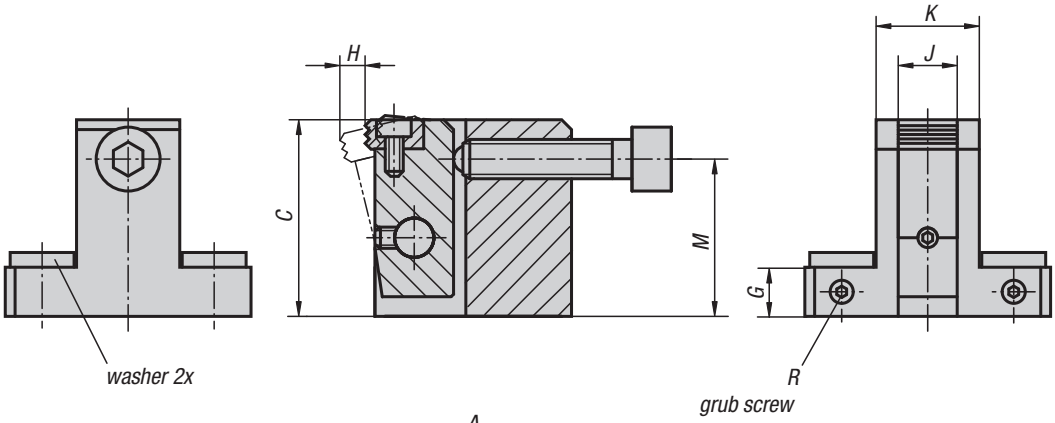


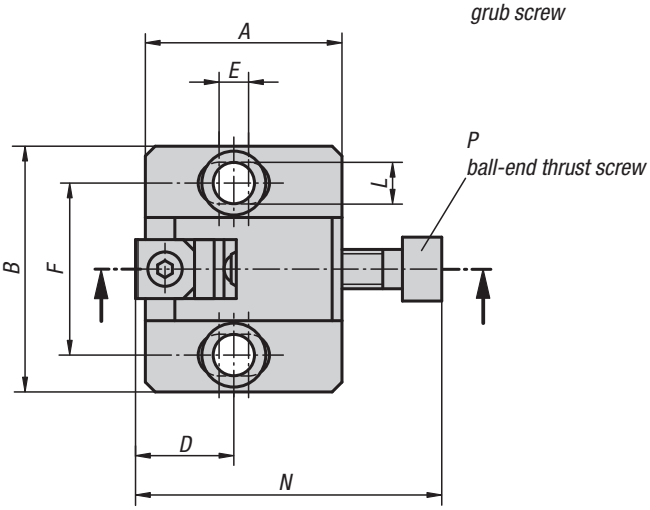


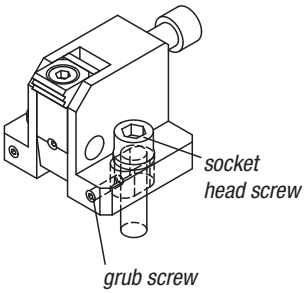


## KIPP Side clamps

| Order No. | A | B | C | D | E | F | G | H | J | K | L | M | N | P | R | Clamping force N | Tightening torque Nm |
|---|---|---|---|---|---|---|---|---|---|---|---|---|---|---|---|---|---|
| **K0929.080400** | 40 | 50 | 40 | 20 | 6 | 35 | 10 | 5,3 | 12 | 21 | 8,5 | 32 | 62,5 | M8x35 | M4x10 | 15000 | 25 |
| **K0929.100500** | 50 | 65 | 50 | 25 | 8 | 45 | 12 | 7,1 | 16 | 27 | 11 | 40 | 74 | M10x40 | M4x12 | 27000 | 50 |
| **K0929.120600** | 60 | 70 | 60 | 30 | 10 | 50 | 15 | 8 | 20 | 31 | 13 | 48 | 91 | M12x50 | M5x15 | 38000 | 90 |
| **K0929.160800** | 80 | 90 | 80 | 40 | 15 | 65 | 20 | 10,2 | 25 | 39 | 17 | 64 | 115 | M16x60 | M6x20 | 46000 | 130 |

KIRÁLY TRADING KFT H-1151 Budapest Mogyoród útja 12 - 14 tel: 061307-3801 Email:pzoli@kiralytrading.hu

# Side clamps

**Material:**
Body and arm carbon steel.
Jaw tool steel.

**Version:**
Body black oxidised.
Arm and jaw tempered and black oxidised.

**Sample order:**
K0930.080400

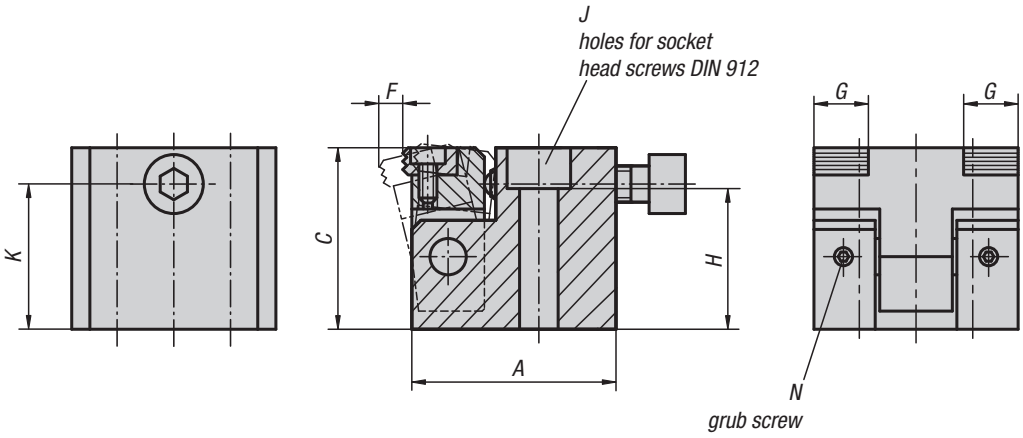


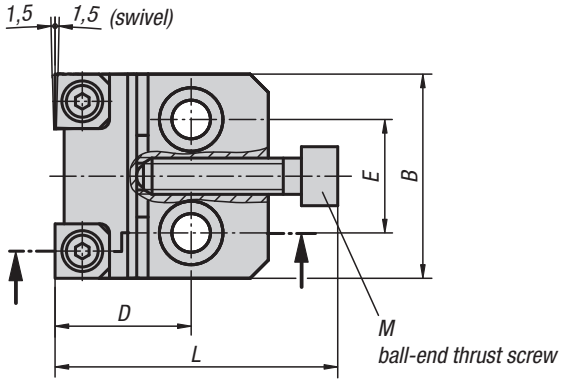


## KIPP Side clamps

| Order No. | A | B | C | D | E | F | G | H | J | K | L | M | N | Clamping force N | Tightening torque Nm |
|---|---|---|---|---|---|---|---|---|---|---|---|---|---|---|---|
| **K0930.080400** | 45 | 45 | 40 | 30 | 25 | 5,3 | 12 | 31 | M8 | 32 | 62,5 | M8x35 | M4x4 | 15000 | 25 |
| **K0930.100500** | 55 | 55 | 50 | 40 | 30 | 7,1 | 16 | 39 | M10 | 40 | 74 | M10x40 | M4x4 | 27000 | 50 |
| **K0930.120600** | 65 | 65 | 60 | 45 | 35 | 8 | 20 | 47 | M12 | 48 | 91 | M12x50 | M5x5 | 38000 | 90 |

KIRÁLY TRADING KFT H-1151 Budapest Mogyoród útja 12 - 14 tel: 061307-3801 Email:pzoli@kiralytrading.hu

# Side clamps

with rest pad

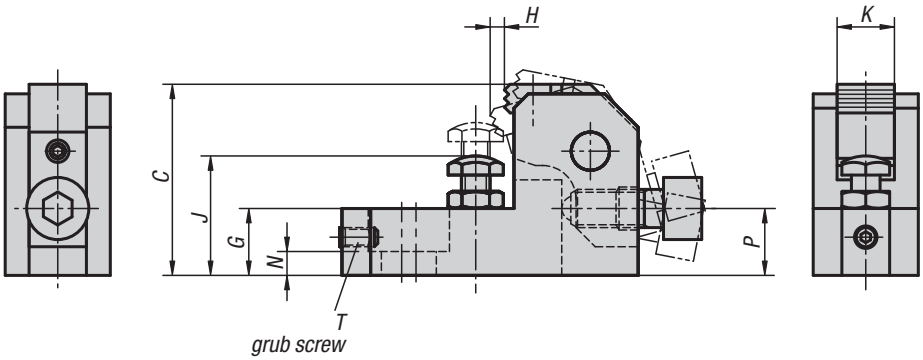


**Material:**
Housing and arm carbon steel.
Jaw tool steel.

**Version:**
Housing tempered and black oxidised.
Arm black oxidised.
Jaw tempered and black oxidised.

**Sample order:**
K0931.02508

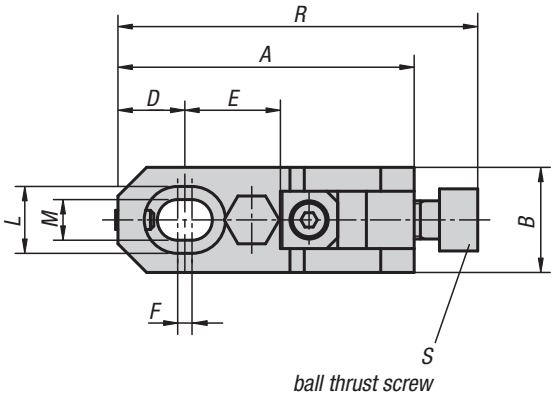


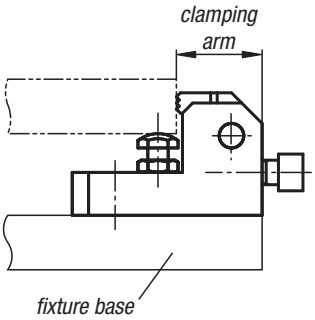


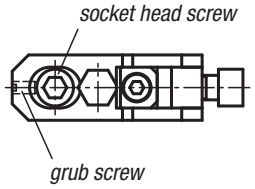


## KIPP Side clamps with rest pad

| Order No. | A | B | C | D | E | F | G | H | J | K | L | M | N | P | R | S | T | Clamping force N | Tightening torque Nm |
|---|---|---|---|---|---|---|---|---|---|---|---|---|---|---|---|---|---|---|---|
| **K0931.02508** | 62 | 22 | 40 | 14 | 20 | 3 | 14 | 3 | 25-32 | 12 | 14 | 8,5 | 5 | 14 | 75,5 | M8x20 | M4x8 | 6000 | 15 |
| **K0931.03210** | 78 | 25 | 50 | 18 | 25 | 4 | 18 | 3,7 | 32-40 | 16 | 17,5 | 11 | 7 | 17,5 | 95 | M10x25 | M5x10 | 10000 | 30 |
| **K0931.04012** | 93 | 32 | 60 | 21 | 30 | 5 | 21 | 4,5 | 40-48 | 20 | 20 | 13 | 8 | 21 | 113 | M12x30 | M6x12 | 17000 | 65 |
| **K0931.04816** | 124 | 38 | 80 | 28 | 40 | 6 | 27 | 6 | 48-63 | 25 | 26 | 17 | 10 | 28 | 151 | M16x40 | M8x16 | 25000 | 130 |

# One touch clamps

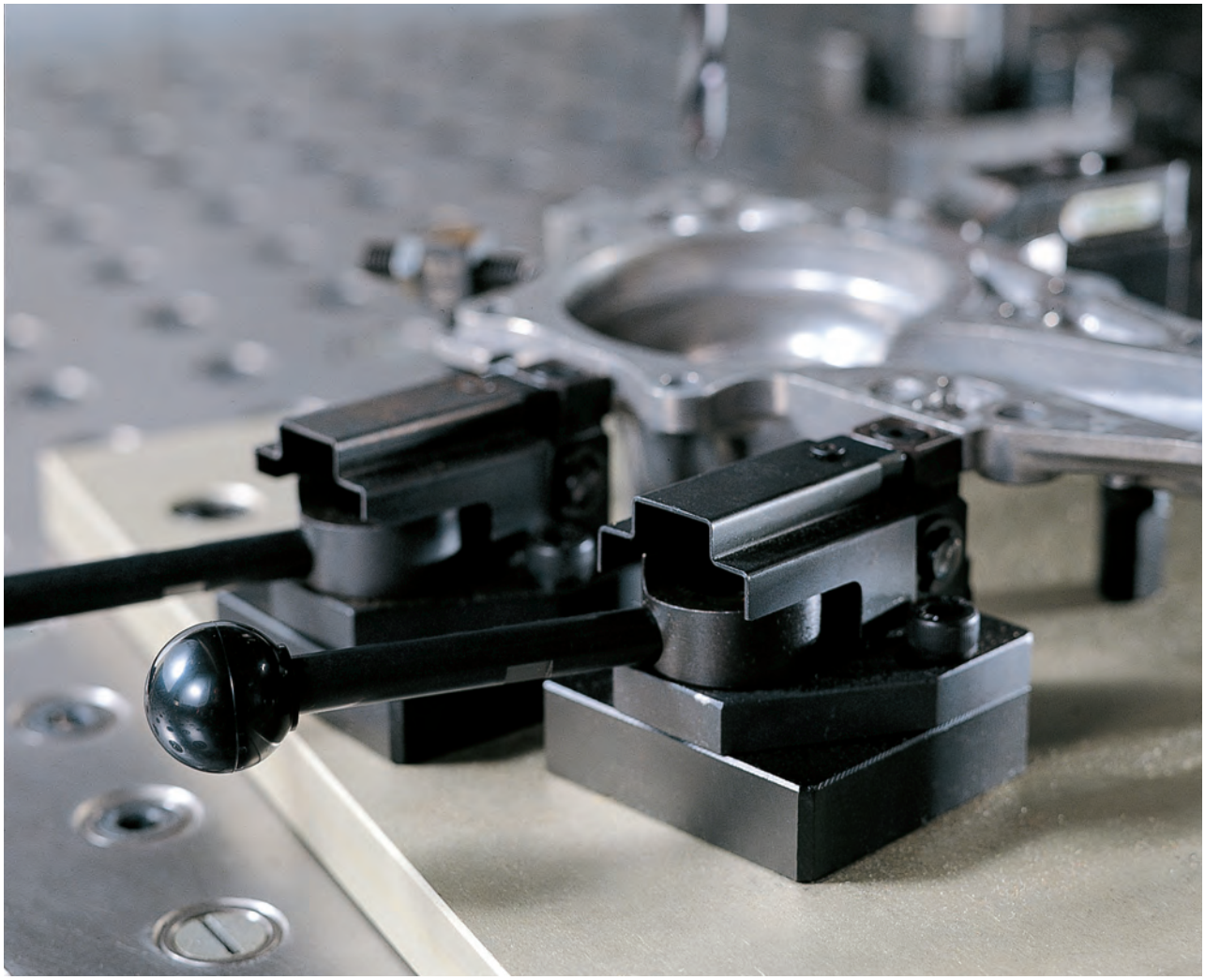

KIRÁLY TRADING KFT H-1151 Budapest Mogyoród útja 12 - 14 tel: 061307-3801 Email:pzoli@kiralytrading.hu

# Toe clamps

Form A

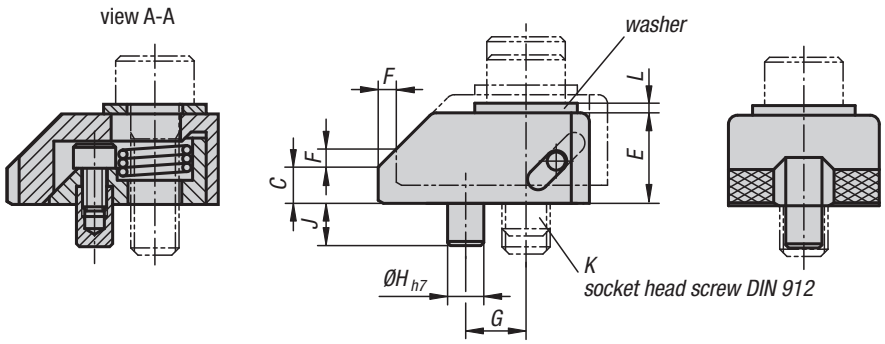


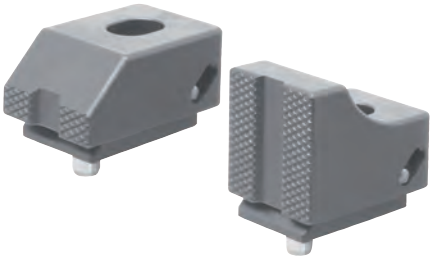

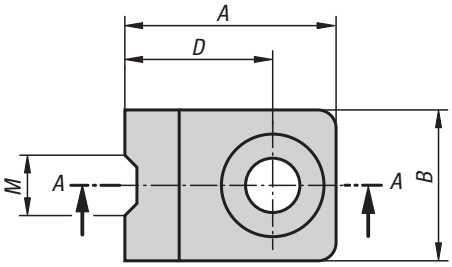


**Material:**
Carbon steel.

**Version:**
Tempered and black oxidised.

**Sample order:**
K0932.0806

Form B

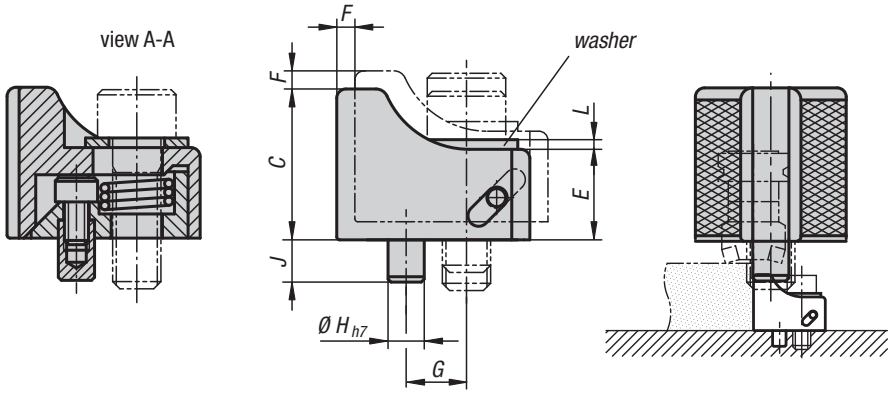


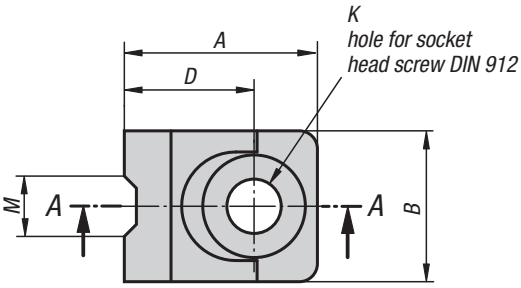


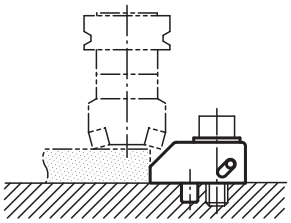

## KIPP Toe clamps

| Order No. | Form | A | B | C | D | E | F | G | H | J | K | L | M | Clamping force N | Tightening torque Nm |
|---|---|---|---|---|---|---|---|---|---|---|---|---|---|---|---|
| **K0932.0806** | A | 35 | 25 | 6 | 24,5 | 15 | 3 | 10 | 6 | 7 | M8 | 1,6 | 10 | 7000 | 25 |
| **K0932.1008** | A | 43 | 30 | 8 | 29 | 19 | 4 | 12 | 6 | 7 | M10 | 2 | 11 | 8500 | 50 |
| **K0932.1209** | A | 54 | 35 | 9 | 37 | 23 | 5 | 16 | 8 | 10 | M12 | 2,3 | 12 | 20000 | 90 |
| **K0932.1610** | A | 65 | 40 | 10 | 45 | 25 | 6 | 20 | 10 | 10 | M16 | 3,2 | 14 | 40000 | 200 |
| **K0932.0825** | B | 32 | 25 | 25 | 21,5 | 15 | 3 | 10 | 6 | 7 | M8 | 1,6 | 10 | 7000 | 25 |
| **K0932.1032** | B | 40 | 30 | 32 | 26 | 19 | 4 | 12 | 6 | 7 | M10 | 2 | 11 | 8500 | 50 |
| **K0932.1238** | B | 50 | 35 | 38 | 33 | 23 | 5 | 16 | 8 | 10 | M12 | 2,3 | 12 | 20000 | 90 |
| **K0932.1645** | B | 60 | 40 | 45 | 40 | 25 | 6 | 20 | 10 | 10 | M16 | 3,2 | 14 | 40000 | 200 |

KIRÁLY TRADING KFT H-1151 Budapest Mogyoród útja 12 - 14 tel: 061307-3801 Email:pzoli@kiralytrading.hu

# Toe clamps

Form A

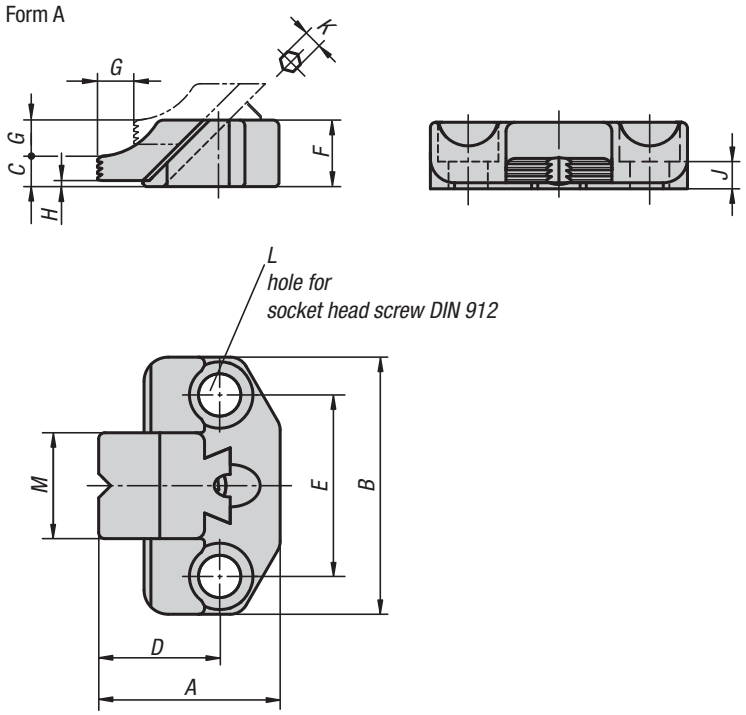

**Material, version:**
Body carbon steel, tempered and black oxidised.
Jaw carbon steel, black oxidised, corners tempered.

**Sample order:**
K0933.0808

Form B

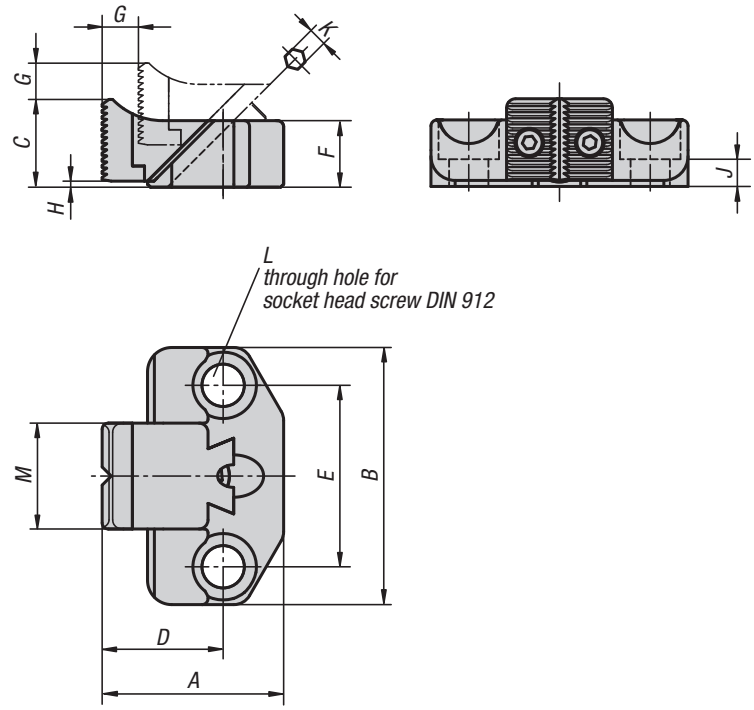


## KIPP Toe clamps

| Order No. | Form | A | B | C | D | E | F | G | H | J | K | L | M | Clamping force N | Tightening torque Nm | Approx. weight kg |
|---|---|---|---|---|---|---|---|---|---|---|---|---|---|---|---|---|
| **K0933.0808** | A | 39,5 | 65 | 7,5 | 25 | 45 | 16 | 7 | 1,5 | 7 | 4 | M8 | 25 | 4000 | 8 | 0,160 |
| **K0933.1210** | A | 60 | 85 | 10 | 40 | 60 | 22 | 12 | 2 | 9 | 6 | M12 | 35 | 9000 | 26 | 0,450 |
| **K0933.1614** | A | 77 | 100 | 14 | 50 | 70 | 30 | 14 | 2 | 13 | 8 | M16 | 40 | 17000 | 60 | 0,900 |
| **K0933.0820** | B | 39,5 | 65 | 19,5 | 25 | 45 | 16 | 7 | 1,5 | 7 | 4 | M8 | 25 | 4000 | 8 | 0,180 |
| **K0933.1229** | B | 60 | 85 | 29 | 40 | 60 | 22 | 12 | 2 | 9 | 6 | M12 | 35 | 9000 | 26 | 0,500 |
| **K0933.1638** | B | 77 | 100 | 38 | 50 | 70 | 30 | 14 | 2 | 13 | 8 | M16 | 40 | 17000 | 60 | 1,010 |

# K0934

# Clamping collets machinable

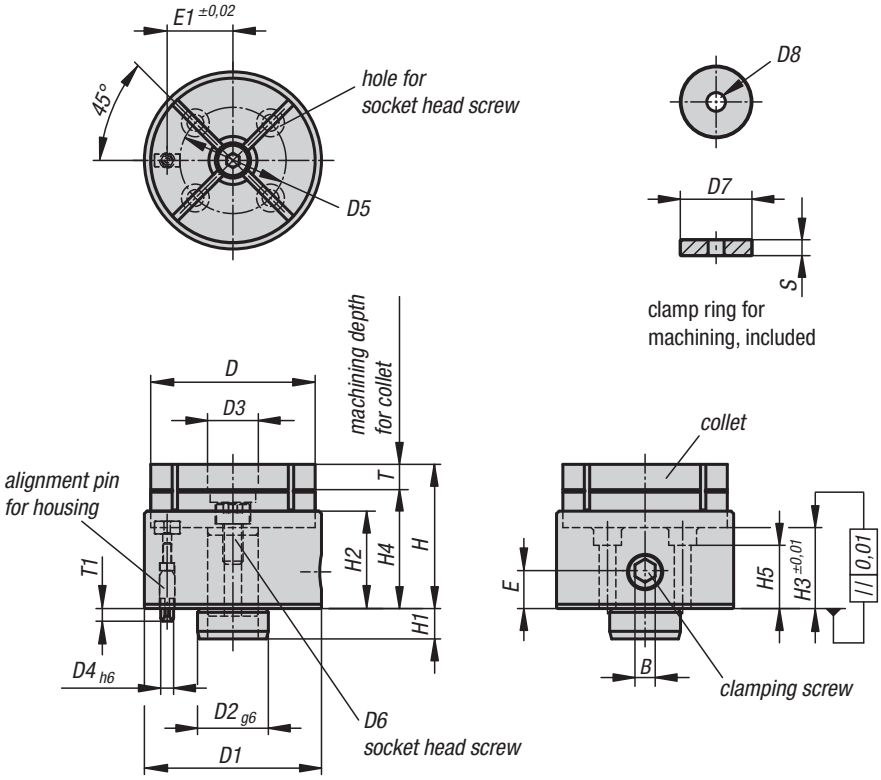


**Material:**
Housing and clamping ring carbon steel 1.0503.
Locating pins carbon steel 1.7220.
Collet aluminium 3.4365.

**Version:**
Housing, locating pins and clamping ring black oxidised.
Collet blue anodized.

**Sample order:**
K0934.065057

**Note:**
Do not tighten the clamping screw without the clamping ring or a workpiece in the collet.
Tighten the clamping screw on the side to clamp the workpiece around its circumference.
The collet can be machined to suit the contour of the workpiece.
Ideal clamping element for machining workpieces on machining centres, milling centres, 5-axis machines, etc.

mounting hole pattern

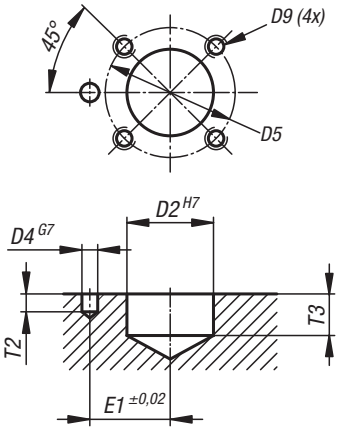


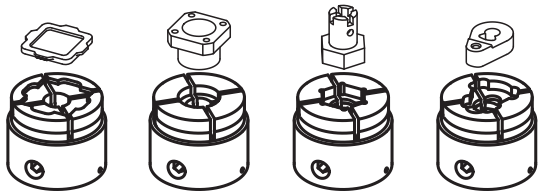

## KIPP Clamping collets machinable

| Order No. | B | D | D1 | D2 | D3 | D4 | D5 | D6 | D7 | D8 | D9 | E | E1 | H | H1 | H2 | H3 | H4 | H5 | T | T1 | T2 | T3 | S | Clamping force N | Tightening torque max. Nm | Order No. Collet |
|---|---|---|---|---|---|---|---|---|---|---|---|---|---|---|---|---|---|---|---|---|---|---|---|---|---|---|---|
| **K0934.065057** | 8 | 65 | 70 | 28 | 19 | 6 | 42 | M8x15 | 18 | M4 | M6 | 15 | 26 | 59,5 | 12 | 39 | 34,5 | 47 | 25 | 10 | 5 | 6 | 13 | 4 | 4000 | 60 | K0934.065025 |
| **K0934.090072** | 10 | 90 | 95 | 42 | 23 | 8 | 60 | M10x20 | 22 | M5 | M8 | 17 | 36 | 72,5 | 14 | 46 | 38,5 | 57 | 28 | 15 | 7 | 8 | 15 | 6 | 6000 | 100 | K0934.090034 |

KIRÁLY TRADING KFT H-1151 Budapest Mogyoród útja 12 - 14 tel: 061307-3801 Email:pzoli@kiralytrading.hu

# Mounting plates

for clamping collets

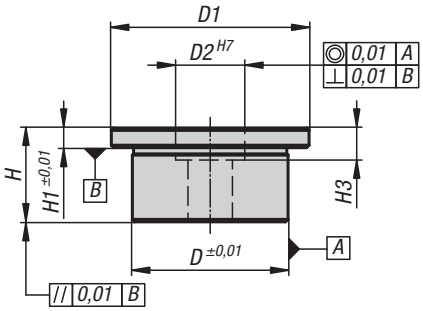


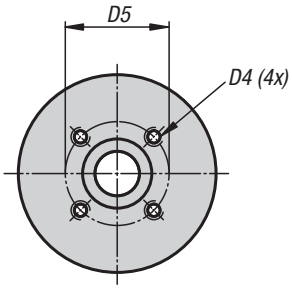


**Material:**
Carbon steel 1.7262.

**Version:**
Black oxidised and case-hardened.

**Sample order:**
K0394.065038

**Note:**
Suitable for clamping collets
K0934.065057 and K0934.090072.

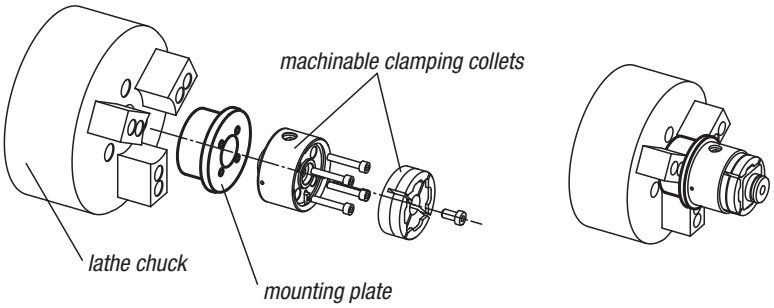


Mounting plate for holding the collet in a lathe chuck

## KIPP Mounting plates for clamping collets

| Order No. | D | D1 | D2 | D4 | D5 | H | H1 | H3 | Approx. weight kg |
|---|---|---|---|---|---|---|---|---|---|
| **K0934.065038** | 63 | 80 | 28 | M6x12 | 42 | 38 | 8 | 13 | 0,910 |
| **K0934.090043** | 80 | 100 | 42 | M8x16 | 60 | 43 | 8 | 15 | 1,600 |

# Zero Point Clamping System

## UNI lock
## BALL lock

# Technical information on UNI lock zero point clamping system

## Application

The modular structured flexible UNI lock zero point clamping system was specifically developed for the machining and non-machining fields.

This system enables a quick and accurate clamping and referencing of fixtures and workpieces on all production machines, machining centres, EDM's and inspection equipment.

Whether subplate, fixture, vice or workpiece, this system allows an exchange with a defined reference point in a matter of seconds and repeat accuracy of less than 0.005 mm.

## The advantages

- Modular system
- Compact flat design
- Workpiece or fixture change within seconds
- Pneumatic system
- Positive locking
- Holding forces up to 75 KN and pull-in forces up to 15 KN
- Turbo function
- Positioning via short conical locator
- Works reliably in every mounting position
- Sealing air function

## Your benefit

- Can be combined with our modular clamping system
- Better machine room utilisation
- Increased productive machine running times, significantly reduced set-up times
- Reliable system
- Very high cutting forces possible
- High operating and process safety
- Increased pull-in forces are standard
- Very high repeat accuracy
- Clamping cylinder installation in both vertical and horizontal positions
- Blow out function can be activated when changing pallets.

# Technical information on UNI lock zero point clamping system

## Spigot arrangement/set-up

The workpieces, fixtures or subplates are positioned and clamped using spigots. There are three different spigot types.

| | |
|---|---|
| Centring spigot | fixed in x and y direction (reference point) |
| Compensating pin | fixes the free axis (studs) |
| Clamping spigot | Spigot with undersize (no centring function only clamping function) |
| Cylindrical pin | For individual clamping, positioning is done with centring spigot + 2 cylindrical pins |

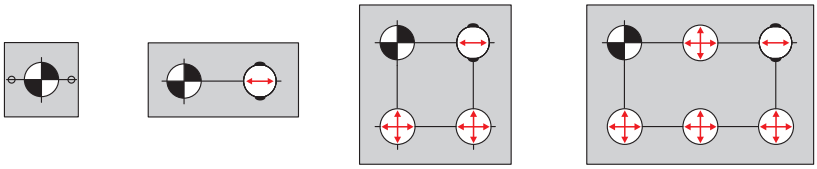

1 = fastening with grub screw DIN 913
2 = fastening with DIN 912 screw through the tightening bolt
3 = fastening with DIN 912 screw through the fixture or workpiece

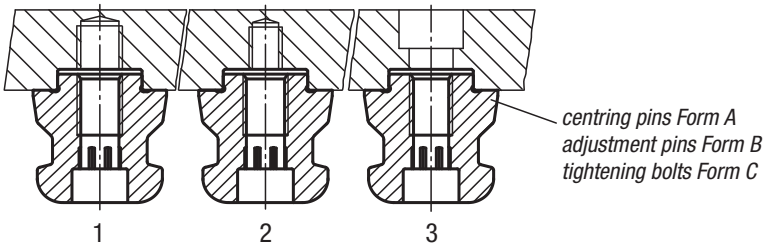


## The function

The proven UNI lock clamping module was made even flatter due to a new mechanism. The built-in toggle system together with guided clamping slides ensures high process reliability of the system.

## Toggle-joint mechanism

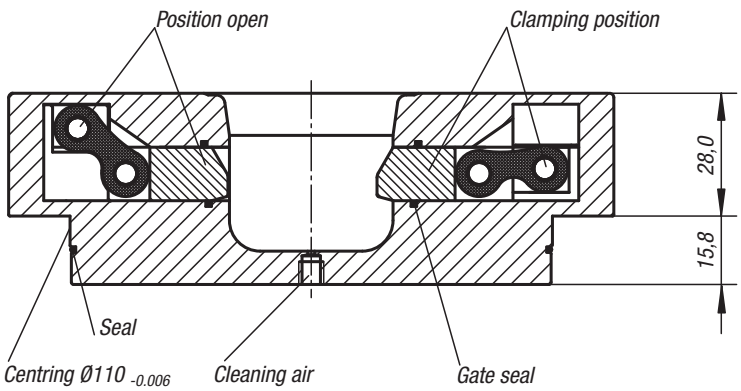

# UNI lock clamping station

1x

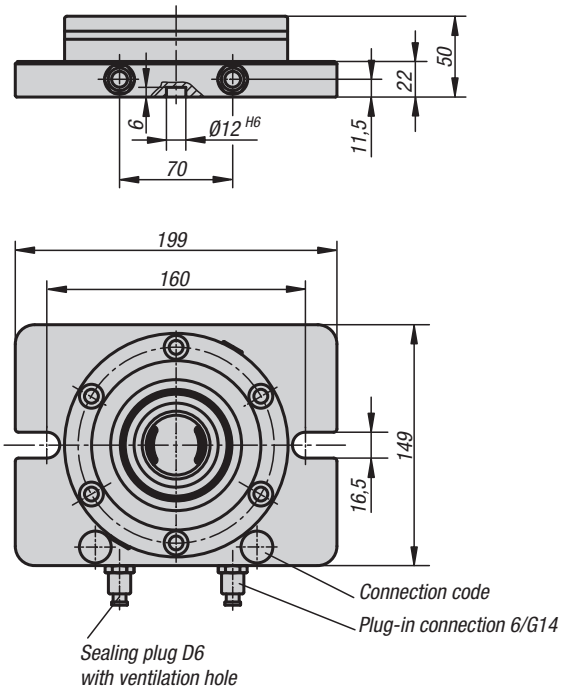


2x

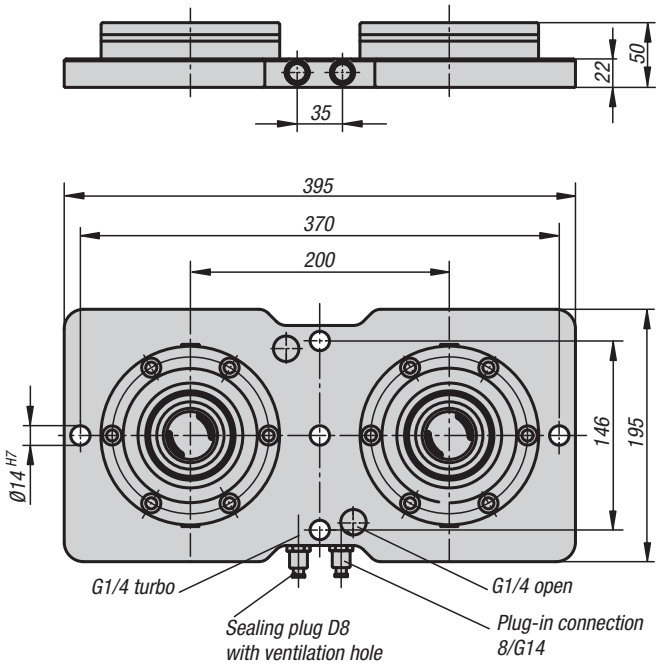


**Material:**
Clamping module mild steel.
Base plate steel 1.1730.

**Version:**
Clamping module contact surfaces case-hardened and ground.
Base plate ground on both sides.

**Sample order:**
K1009.1000149199

**Note:**
Completely mounted multi-clamping stations with integrated UNI lock Ø138 mm mounting clamps. The clamping stations are secured to the machine table directly or with clamps.
Common bore patterns are pre-centred on the rear side for mounting.
Clamping stations can be aligned via the 14H7 reference holes.
The clamping stations are actuated via a central pneumatic connection.
The high clamping forces are generated by the integrated spring package (the unit clamps in the de-pressurized state).
The release process occurs pneumatically.

The following retaining forces are possible with the UNI lock clamping bolt in conjunction with mounting screws M10, M12, M16.

- Retaining force (M10) 35,000N/module
- Retaining force (M12) 50,000N/module
- Retaining force (M16) 75,000N/module

**On request:**
Clamping station in special dimensions.

**Technical data:**
- Opening pressure: 6bar, lubricated air
- Turbo pressure: 6bar
- Air connection: G1/4
- Repeat accuracy ≤ 0.005 mm
- Reference holes 14H7 to align the clamping plate.
- Pneumatic connectors for 6 mm pneumatic hose.

## KIPP UNI lock clamping station

| Order No. | Version |
|---|---|
| K1009.1000149199 | 1x |
| K1009.2200395195 | 2x |

KIRÁLY TRADING KFT H-1151 Budapest Mogyoród útja 12 - 14 tel: 061307-3801 Email:pzoli@kiralytrading.hu

# UNI lock clamping station

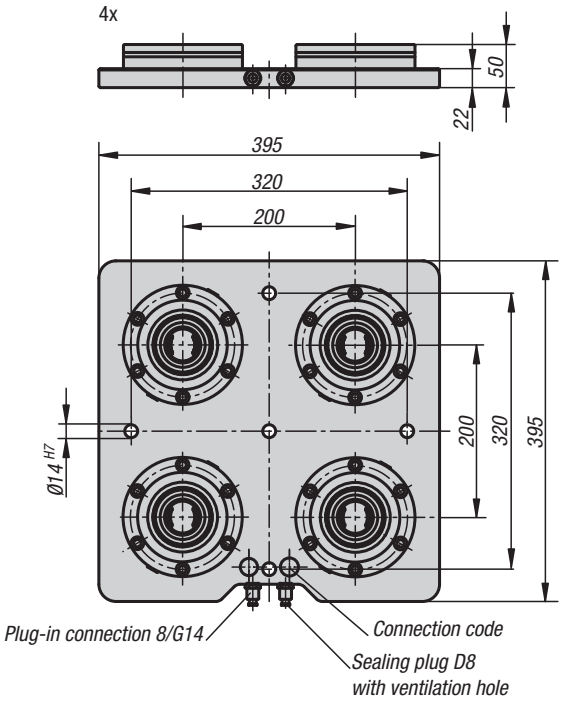


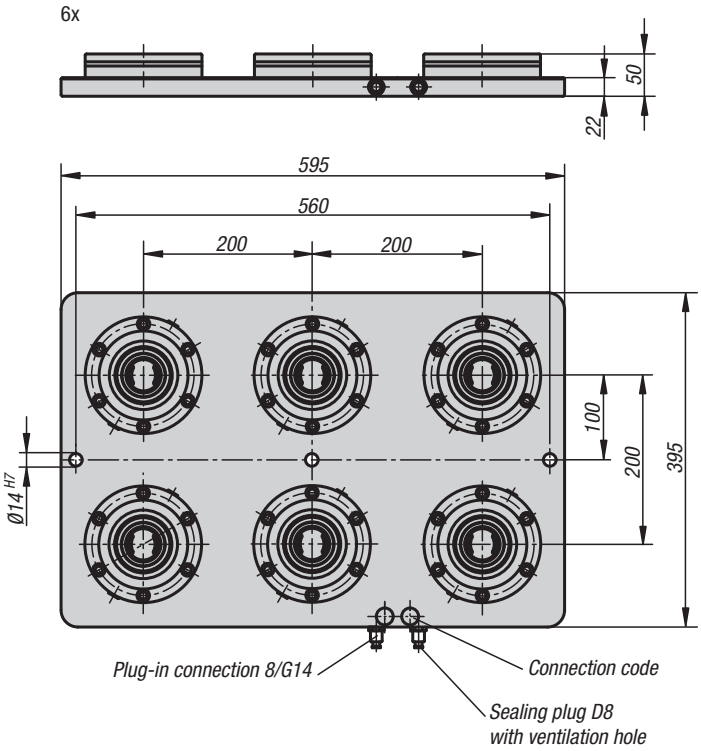


**Material:**
Clamping module mild steel.
Base plate steel 1.1730.

**Version:**
Clamping module contact surfaces case-hardened and ground.
Base plate ground on both sides.

**Sample order:**
K1009.1000149199

**Note:**
Completely mounted multi-clamping stations with integrated UNI lock Ø138 mm mounting clamps. The clamping stations are secured to the machine table directly or with clamps.
Common bore patterns are pre-centred on the rear side for mounting.
Clamping stations can be aligned via the 14H7 reference holes.
The clamping stations are actuated via a central pneumatic connection.
The high clamping forces are generated by the integrated spring package (the unit clamps in the de-pressurized state).
The release process occurs pneumatically.

The following retaining forces are possible with the UNI lock clamping bolt in conjunction with mounting screws M10, M12, M16.

- Retaining force (M10) 35,000N/module
- Retaining force (M12) 50,000N/module
- Retaining force (M16) 75,000N/module

**On request:**
Clamping station in special dimensions.

**Technical data:**
- Opening pressure: 6bar, lubricated air
- Turbo pressure: 6bar
- Air connection: G1/4
- Repeat accuracy ≤ 0.005 mm
- Reference holes 14H7 to align the clamping plate.
- Pneumatic connectors for 6 mm pneumatic hose.

## KIPP UNI lock clamping station

| Order No. | Version |
|---|---|
| K1009.4200395395 | 4x |
| K1009.6200595395 | 6x |

KIRÁLY TRADING KFT H-1151 Budapest Mogyoród útja 12 - 14 tel: 061307-3801 Email:pzoli@kiralytrading.hu

# UNI lock installation clamp

Without rotation lock

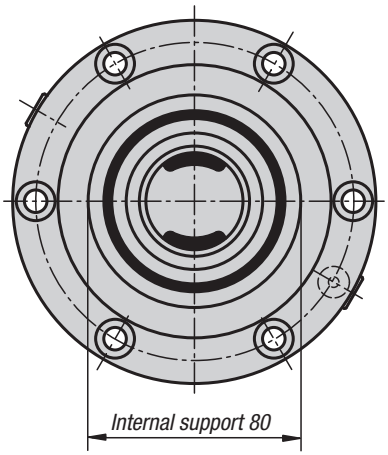


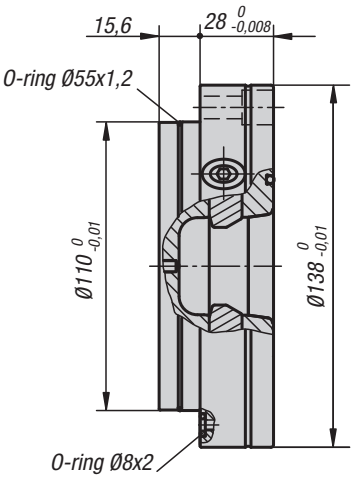


With rotation lock

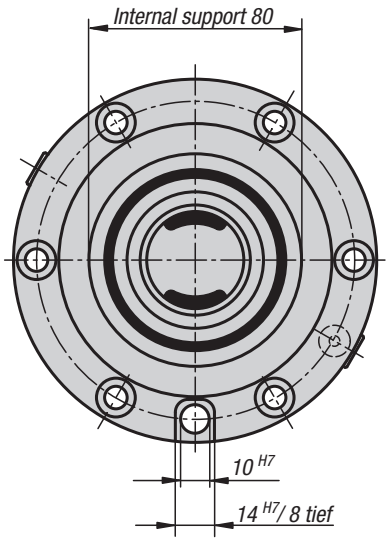


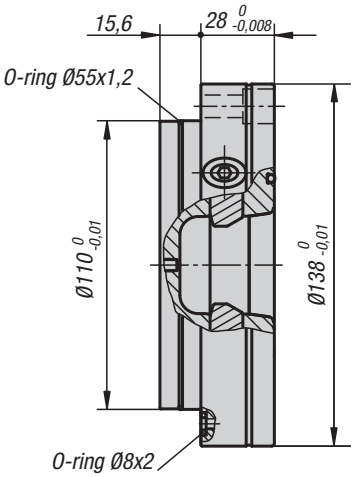


**Material:**
Steel.

**Version:**
Contact surfaces case-hardened and ground.

**Sample order:**
K1003.138280

**Note:**
The UNI lock mounting clamps can be mounted in any position, with or without projection on machine tables, in fixtures (tooling plates, cubes, tombstones, etc.).
The modular design lets the number of clamps and distance between the clamps to be ideally adjusted to suit your clamping task. The clamps can be supplied with or without rotation lock.
The high clamping forces are generated by the integrated spring package (the unit clamps in the de-pressurized state). The release process occurs pneumatically.
The following retaining forces are possible with the UNI lock clamping bolt in conjunction with mounting screws M10, M12, M16:
- Retaining force (M10) 35,000N
- Retaining force (M12) 50,000N
- Retaining force (M16) 75,000N

Supplied with:
1x clamping module incl. 6x mounting bolts.
6x screw caps.
2x air connection O-rings.
1x installation O-ring.

**Technical data:**
- Opening pressure: 6bar, lubricated air
- Turbo pressure: 6bar
- Air connection: G1/8
- Repeat accuracy ≤ 0.005 mm

## KIPP UNI lock installation clamp

| Order No. | Dimensions |
|---|---|
| K1003.138280 | see drawing |
| K1003.138281 | see drawing |

KIRÁLY TRADING KFT H-1151 Budapest Mogyoród útja 12 - 14 tel: 061307-3801 Email:pzoli@kiralytrading.hu

# UNI lock clamping bolt

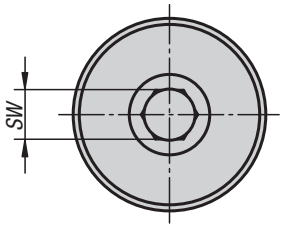


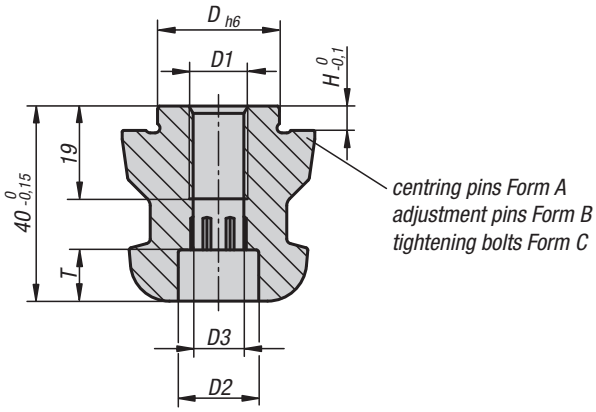

**Material:**
Steel.

**Version:**
Hardened and black oxidised.
Contact faces ground.

**Sample order:**
K0967.140160512

**Note:**
The UNI lock clamping bolt is suitable for clamping and positioning workpieces and fixtures. Clamping bolts are screwed onto the exchange element and adapted to the various basic modules.

| | |
|---|---|
| Centring pins = Form A | fixes in x and y axis (reference point) |
| Adjustment pins =Form B | fixes the free axis (bayonet pin) |
| Tightening bolts = Form C | Pins with undersize (no centring function, clamping only) |

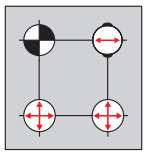

1 = fastening with grub screw DIN 913
2 = fastening with DIN 912 screw through the tightening bolt
3 = fastening with DIN 912 screw through the fixture or workpiece

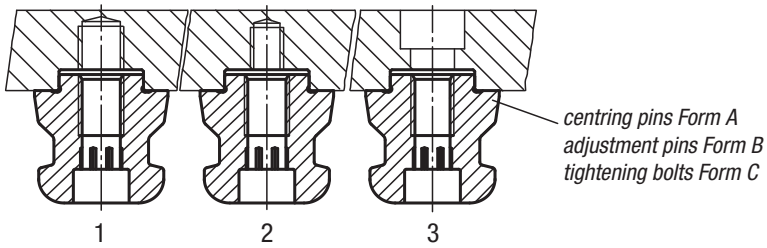


## KIPP UNI lock clamping bolt

| Order No. | Form | D | D1 | D2 | D3 | H | T | SW | Approx. weight kg |
|---|---|---|---|---|---|---|---|---|---|
| **K0967.140160512** | A | 16 | M12 | 16,5 | 10,3 | 5 | 10,5 | 10 | 0,2 |
| **K0967.140180512** | A | 18 | M12 | 16,5 | 10,3 | 5 | 10,5 | 10 | 0,2 |
| **K0967.140200512** | A | 20 | M12 | 16,5 | 10,3 | 5 | 10,5 | 10 | 0,2 |
| **K0967.140250212** | A | 25 | M12 | 16,5 | 10,3 | 5 | 10,5 | 10 | 0,2 |
| **K0967.140250516** | A | 25 | M16 | 18,5 | 14,2 | 5 | 12,5 | 17 | 0,2 |
| **K0967.140251012** | A | 25 | M12 | 16,5 | 10,3 | 10 | 10,5 | 10 | 0,2 |
| **K0967.140251016** | A | 25 | M16 | 18,5 | 14,2 | 10 | 12,5 | 17 | 0,2 |
| **K0967.240250512** | B | 25 | M12 | 16,5 | 10,3 | 5 | 10,5 | 10 | 0,2 |
| **K0967.240250516** | B | 25 | M16 | 18,5 | 14,2 | 5 | 12,5 | 17 | 0,2 |
| **K0967.240251012** | B | 25 | M12 | 16,5 | 10,3 | 10 | 10,5 | 10 | 0,2 |
| **K0967.240251016** | B | 25 | M16 | 18,5 | 14,2 | 10 | 12,5 | 17 | 0,2 |
| **K0967.340250512** | C | 25 | M12 | 16,5 | 10,3 | 5 | 10,5 | 10 | 0,2 |
| **K0967.340250516** | C | 25 | M16 | 18,5 | 14,2 | 5 | 12,5 | 17 | 0,2 |
| **K0967.340251012** | C | 25 | M12 | 16,5 | 10,3 | 10 | 10,5 | 10 | 0,2 |
| **K0967.340251016** | C | 25 | M16 | 18,5 | 14,2 | 10 | 12,5 | 17 | 0,2 |

KIRÁLY TRADING KFT H-1151 Budapest Mogyoród útja 12 - 14 tel: 061307-3801 Email:pzoli@kiralytrading.hu

# Protection bolts

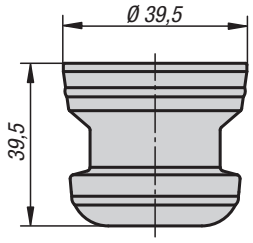


**Material:**
Aluminium.

**Version:**
Black anodized

**Sample order:**
K1010.040

**Note:**
Protection bolts to cover the hole.

### KIPP Protection bolts

| Order No. | Dimensions |
|---|---|
| K1010.040 | see drawing |

K1010

# Protective caps

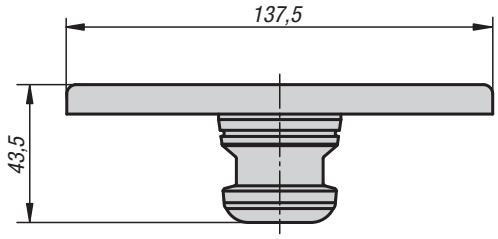


**Material:**
Aluminium.

**Version:**
Black anodized

**Sample order:**
K1010.138

**Note:**
Protective cap for clamping module D = 138.

### KIPP Protective caps

| Order No. | Dimensions |
|---|---|
| K1010.138 | see drawing |

KIRÁLY TRADING KFT H-1151 Budapest Mogyoród útja 12 - 14 tel: 061307-3801 Email:pzoli@kiralytrading.hu

# Quick-fit couplings

Form A

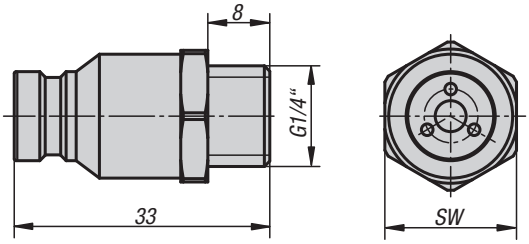


**Material:**
Steel.

**Version:**
galvanized.

**Sample order:**
K1011.0014

**Note:**
Quick-fit couplings suitable for UNI lock clamping stations.

Form B

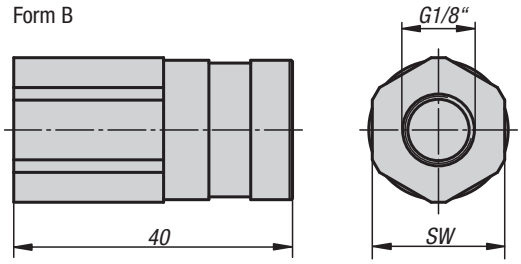


## KIPP Quick-fit couplings

| Order No. | Form | SW |
|---|---|---|
| **K1011.0014** | A | 17 |
| **K1011.1018** | B | 19 |

# BALL lock, Locating and Clamping System

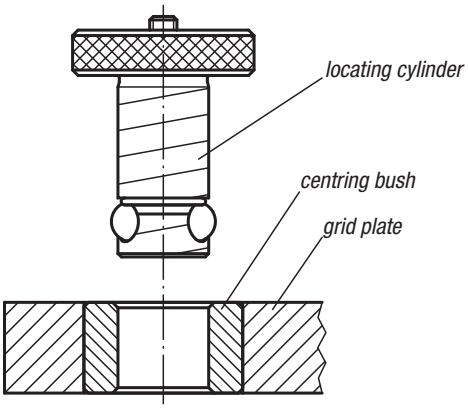


**recommanded installation**

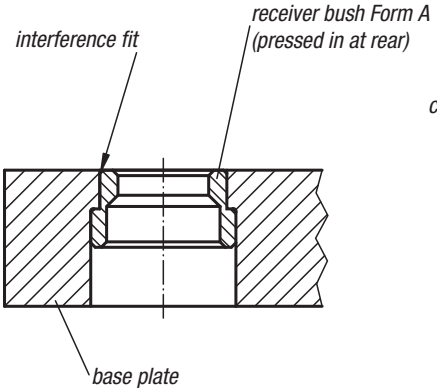


**alternative installation**

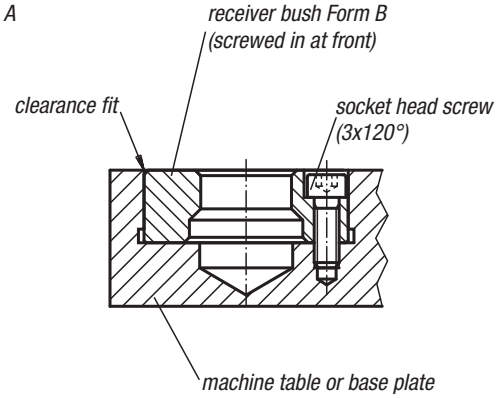


## General information

1. The ball lock positioning and clamping system makes precise positioning and fastening of clamping and base plates possible in just seconds. The system consists of a locating cylinder, a centring bush and a receiver bushing.
2. Three easy steps to applying the ball lock positioning and clamping system:
   Mount two receiver bushings on the machine table or on the base plate, as well as two centring bushings on the fastening plate.
   Insert the locating cylinder through the centring bushings onto the receiver bushings in order to attain the precise positioning.
   Turn fixing screws in each locating cylinder approx. twice in order to attain positive tight clamping. Eighteen different locating cylinders, two centring bushing types and two receiver bushing models are available.
3. A centring bush grade I (left below) and a centring bush grade I or II (right above) should be installed in each fastening plate as far apart from one another as possible.
   When more than two locating cylinders are used, in order to attain additional retention force (this is dependent on the application), holes must be drilled in the fastening plate at 0.4 mm up to 0.8 mm larger than the selected locating cylinder diameter.
4. If for example the centre distance between the two positioning holes in the machine table and the clamping plate is kept within a tolerance of ±0.005 mm and two centring bushings grade I are used, a repeat accuracy within ±0.013 mm can be achieved.
   For a somewhat lower repeat accuracy within ±0.04 mm, a centring bushing grade I and a centring bushing grade II with a centre distance tolerance of ±0.03 mm are used.
5. The difference between the centring bush grade I and the centring bush grade II is that the centring bush grade II has a larger internal diameter in order to correspond to the greater centre distance tolerance in the machine table or the base plate.

KIRÁLY TRADING KFT H-1151 Budapest Mogyoród útja 12 - 14 tel: 061307-3801 Email:pzoli@kiralytrading.hu

# Locating cylinders

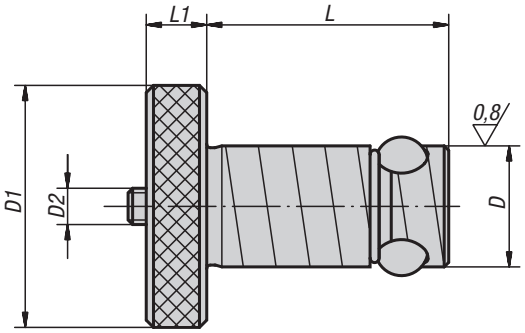


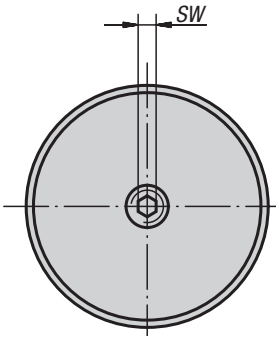


**Material:**
Locating cylinder carbon steel.
Balls roller bearing steel.

**Version:**
Locating cylinder tempered, black oxidised.
Balls hardened, bright.

**Sample order:**
K0935.16020

**Note:**
By tightening the thrust screw (D2) the centre ball is pressed downwards and in turn forces the three locking balls outwards, where they locked in the receiver bush.
**With this easy to use system machine set-up times are up to twelve times shorter than when conventional methods are used.**

Repair Kit:

## KIPP Locating cylinders

| Order No. | Grid plate thickness ±0,05 | D | D1 | D2 | L | L1 | SW | Holding force F kN | Tightening torque max. Nm | Order No. Repair Kit |
|---|---|---|---|---|---|---|---|---|---|---|
| **K0935.13013** | 13 | 13 | 22 | M5 | 27,6 | 6 | 2,5 | 3,3 | 1 | K0935.913013 |
| **K0935.13020** | 20 | 13 | 22 | M5 | 34,6 | 6 | 2,5 | 3,3 | 1 | K0935.913020 |
| **K0935.16020** | 20 | 16 | 32 | M6 | 36,5 | 8 | 3 | 5,3 | 3 | K0935.916020 |
| **K0935.16025** | 25 | 16 | 32 | M6 | 41,5 | 8 | 3 | 5,3 | 3 | K0935.916025 |
| **K0935.20020** | 20 | 20 | 40 | M6 | 39,5 | 10 | 3 | 13,3 | 4 | K0935.920020 |
| **K0935.20025** | 25 | 20 | 40 | M6 | 44,5 | 10 | 3 | 13,3 | 4 | K0935.920025 |
| **K0935.25020** | 20 | 25 | 45 | M8 | 44 | 10 | 4 | 30 | 9 | K0935.925020 |
| **K0935.25025** | 25 | 25 | 45 | M8 | 49 | 10 | 4 | 30 | 9 | K0935.925025 |
| **K0935.30020** | 20 | 30 | 50 | M10 | 49 | 13 | 5 | 44 | 15 | K0935.930020 |
| **K0935.30025** | 25 | 30 | 50 | M10 | 54 | 13 | 5 | 44 | 15 | K0935.930025 |
| **K0935.35020** | 20 | 35 | 60 | M12 | 51 | 13 | 6 | 68 | 25 | K0935.935020 |
| **K0935.35025** | 25 | 35 | 60 | M12 | 56 | 13 | 6 | 68 | 25 | K0935.935025 |
| **K0935.35040** | 40 | 35 | 60 | M12 | 71 | 13 | 6 | 68 | 25 | K0935.935040 |
| **K0935.35050** | 50 | 35 | 60 | M12 | 81 | 13 | 6 | 68 | 25 | K0935.935050 |
| **K0935.50020** | 20 | 50 | 75 | M20 | 64 | 20 | 10 | 88 | 50 | K0935.950020 |
| **K0935.50025** | 25 | 50 | 75 | M20 | 69 | 20 | 10 | 88 | 50 | K0935.950025 |
| **K0935.50040** | 40 | 50 | 75 | M20 | 84 | 20 | 10 | 88 | 50 | K0935.950040 |
| **K0935.50050** | 50 | 50 | 75 | M20 | 94 | 20 | 10 | 88 | 50 | K0935.950050 |

KIRÁLY TRADING KFT H-1151 Budapest Mogyoród útja 12 - 14 tel: 061307-3801 Email:pzoli@kiralytrading.hu

# Centring bushes

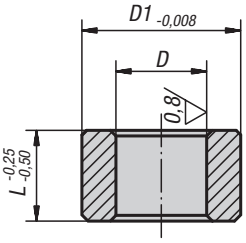


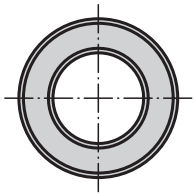

**Material:**
Ball bearing steel

**Version:**
Hardened, black oxidised.

**Sample order:**
K0936.113020

**Note:**
By a centre distance tolerance of ±0.005 mm and two grade I centring bushes a repeat accuracy of ±0.013 mm is possible.
By a centre distance tolerance of ±0.03 mm and one grade I centring bush and one grade II centring bush repeat accuracy of ±0.04 mm is possible.
The centring bush is pressed with light pressure into the receiver holes in tooling plates.
For further details see „General information“.

* Tol. for grade I centring bushes
+0.005 / +0.018
Tol. for grade II centring bushes
+0.025 / +0.050

application example:

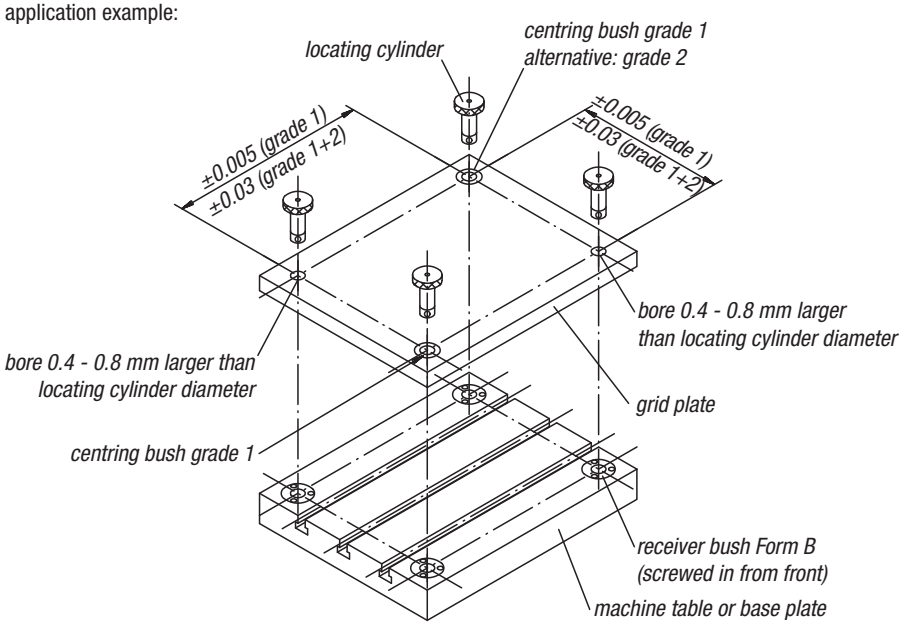


## KIPP Centring bushes

| Order No. grade 1 | Order No. grade 2 | D | D1 | L | Receiving hole for centering bushing Ø +0,010 |
|---|---|---|---|---|---|
| K0936.113013 | K0936.213013 | 13* | 19,040 | 13 | 19,016 |
| K0936.113020 | K0936.213020 | 13* | 19,040 | 20 | 19,016 |
| K0936.116020 | K0936.216020 | 16* | 25,042 | 20 | 25,016 |
| K0936.116025 | K0936.216025 | 16* | 25,042 | 25 | 25,016 |
| K0936.120020 | K0936.220020 | 20* | 35,042 | 20 | 35,018 |
| K0936.120025 | K0936.220025 | 20* | 35,042 | 25 | 35,018 |
| K0936.125020 | K0936.225020 | 25* | 35,042 | 20 | 35,018 |
| K0936.125025 | K0936.225025 | 25* | 35,042 | 25 | 35,018 |
| K0936.130020 | K0936.230020 | 30* | 45,042 | 20 | 45,018 |
| K0936.130025 | K0936.230025 | 30* | 45,042 | 25 | 45,018 |
| K0936.135020 | K0936.235020 | 35* | 45,042 | 20 | 45,018 |
| K0936.135025 | K0936.235025 | 35* | 45,042 | 25 | 45,018 |
| K0936.135040 | K0936.235040 | 35* | 45,042 | 40 | 45,018 |
| K0936.135050 | K0936.235050 | 35* | 45,042 | 50 | 45,018 |
| K0936.150020 | K0936.250020 | 50* | 63,546 | 20 | 63,521 |
| K0936.150025 | K0936.250025 | 50* | 63,546 | 25 | 63,521 |
| K0936.150040 | K0936.250040 | 50* | 63,546 | 40 | 63,521 |
| K0936.150050 | K0936.250050 | 50* | 63,546 | 50 | 63,521 |

# K0937

## Receiver bushes

Form A (pressed in from rear)

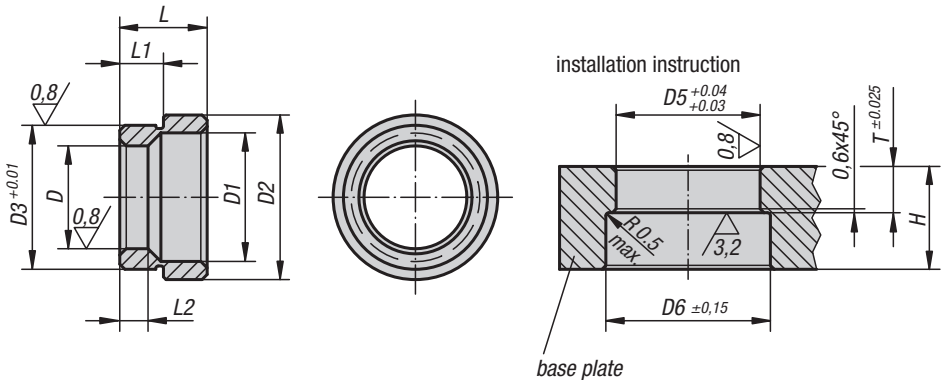

**Material:**
Carbon steel.

**Version:**
Tempered and black oxidised.

**Sample order:**
K0937.20

### Receiver bushes Form A (pressed in from rear)

| Order No. | D | D1 | D2 | D3 | L | L1 | L2 | D5 | D6 | T | Min. grid plate thickness H |
|---|---|---|---|---|---|---|---|---|---|---|---|
| **K0937.13** | 13 | 17,3 | 25 | 20,03 | 12,1 | 6,6 | 5,58 | 20 | 26 | 6,92 | 20 |
| **K0937.16** | 16 | 20,7 | 28,6 | 22,03 | 12,1 | 6,9 | 6,6 | 22 | 29 | 7,24 | 20 |
| **K0937.20** | 20 | 24,8 | 32,2 | 28,03 | 17,1 | 8,42 | 8,13 | 28 | 33 | 8,74 | 25 |
| **K0937.25** | 25 | 30,4 | 40,2 | 35,03 | 21 | 10,22 | 10,16 | 35 | 41 | 10,54 | 25 |
| **K0937.30** | 30 | 36,2 | 48,2 | 42,03 | 21,8 | 10,63 | 11,18 | 42 | 49 | 10,95 | 30 |
| **K0937.35** | 35 | 41,3 | 54,2 | 48,03 | 25,1 | 12,18 | 14,78 | 48 | 55 | 12,5 | 32 |
| **K0937.50** | 50 | 58,4 | 75,2 | 67,03 | 31,1 | 15,43 | 18,67 | 67 | 76 | 15,75 | 45 |

# K0938

## Receiver bushes

Form B (screwed down from front)

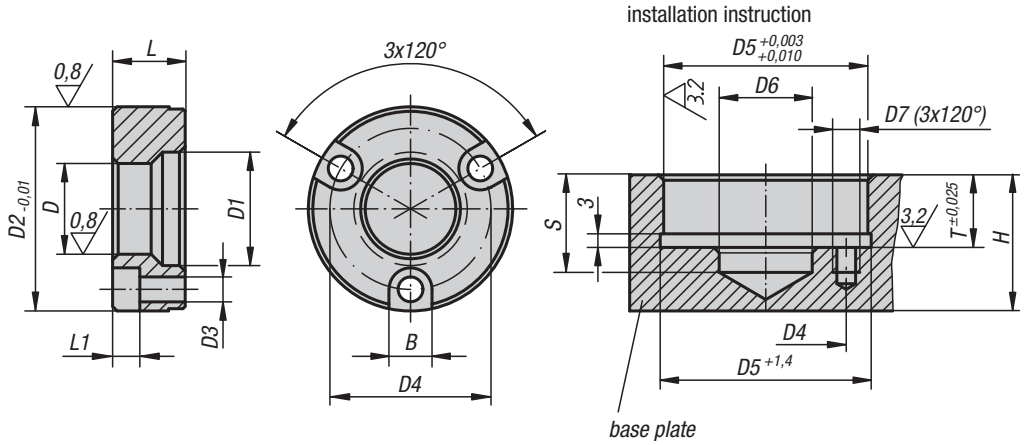

**Material:**
Carbon steel.

**Version:**
Tempered and black oxidised.

**Sample order:**
K0938.13

**Note:**
Fastening screws included.

### Receiver bushes Form B (screwed down from front)

| Order No. | D | D1 | D2 | D3 | D4 | L | L1 | B | D5 | D6 | D7 | S | T | Min. grid plate thickness H |
|---|---|---|---|---|---|---|---|---|---|---|---|---|---|---|
| **K0938.13** | 13 | 17,3 | 34,99 | 4,4 | 25 | 11,56 | 4,5 | 7,6 | 35 | 13,5 | M4x7 | 20 | 11,91 | 20 |
| **K0938.16** | 16 | 20,7 | 36,99 | 4,4 | 29 | 11,56 | 4,5 | 7,6 | 37 | 21 | M4x7 | 20 | 11,91 | 20 |
| **K0938.20** | 20 | 24,8 | 44,99 | 5,4 | 35 | 15,82 | 6,0 | 9,5 | 45 | 21 | M5x9 | 25 | 16,21 | 25 |
| **K0938.25** | 25 | 30,4 | 54,99 | 6,4 | 42 | 19,94 | 7,0 | 11,0 | 55 | 25,5 | M6x10 | 25 | 20,32 | 25 |
| **K0938.30** | 30 | 36,2 | 59,99 | 6,4 | 48 | 21,77 | 7,0 | 11,0 | 60 | 30,5 | M6x11 | 30 | 22,15 | 30 |
| **K0938.35** | 35 | 41,3 | 69,99 | 8,4 | 56 | 22,61 | 9,0 | 14,0 | 70 | 40 | M8x17 | 32 | 22,99 | 32 |
| **K0938.50** | 50 | 58,4 | 91,99 | 10,4 | 75 | 31,12 | 11,0 | 17,0 | 92 | 55 | M10x18 | 45 | 31,5 | 45 |

KIRÁLY TRADING KFT H-1151 Budapest Mogyoród útja 12 - 14 tel: 061307-3801 Email:pzoli@kiralytrading.hu

# 5-axis module system

UNI lock
Basic modules
Adapter
Accessories

# Function

UNI lock was developed specifically for 5-side machining. Ideal for clamping complex workpiece‘s. They can then be machined completely in a single clamping operation. Even machining from the 6th side is possible. The workpiece‘s are connected to the 5-axis module system by a screw connection.

**ADVANTAGES::**

- 5-side machining with no protruding edges
- Modular construction guarantees maximum flexibility
- Interfaces with commonly used systems
- Variable workpiece fastening
- The workpiece is positively joined to the clamping system
- The workpiece is simply positioned with screws or seating‘s
- The zero point is transferred to the workpiece
- High module clamping force
- Very high repeat accuracy

Thanks to the modular construction and the variety of modules, the system can be configured individually and recombined for many applications.

More than 70 elements are available: basic modules, add-on modules and accessories. In combination, they guarantee a variety of heights, docking to interfaces and machining of complex workpiece‘s.

Max. tightening torque 15 Nm

Flexible stack heights through a wide variety of basic and add-on clamp modules

# Setup times

**Without KIPP UNI lock:**

Conventional machining of the workpiece in a vice: It is necessary to reclamp the workpiece several times to complete machining.

Disadvantage: Enormous time loss due to repeat workpiece setups. Accuracy is lost through repeated setups.

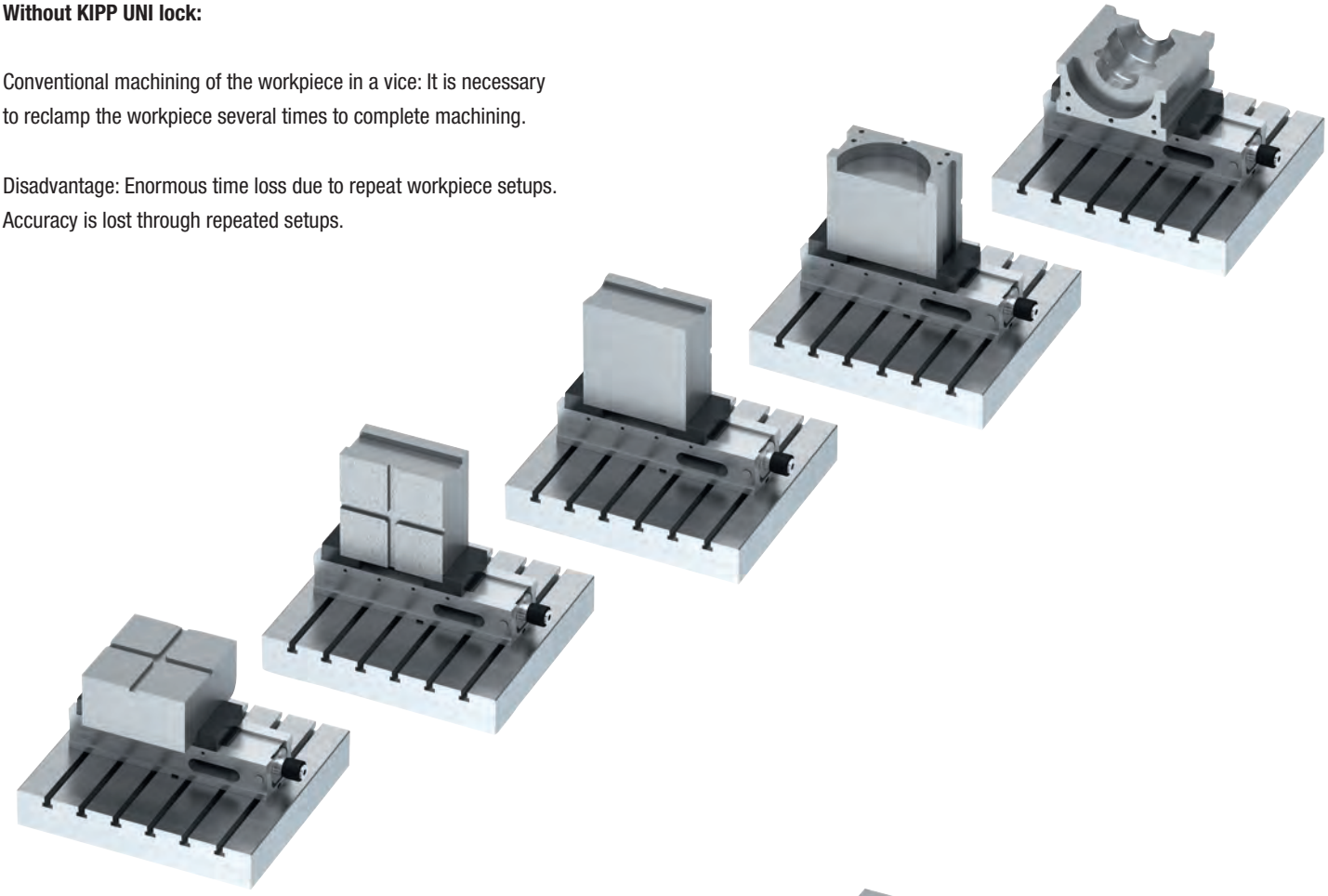

**With KIPP UNI lock:**

Machining with the UNI lock 5-axis module system:
The workpiece is machined completely in 2 clamping operations.

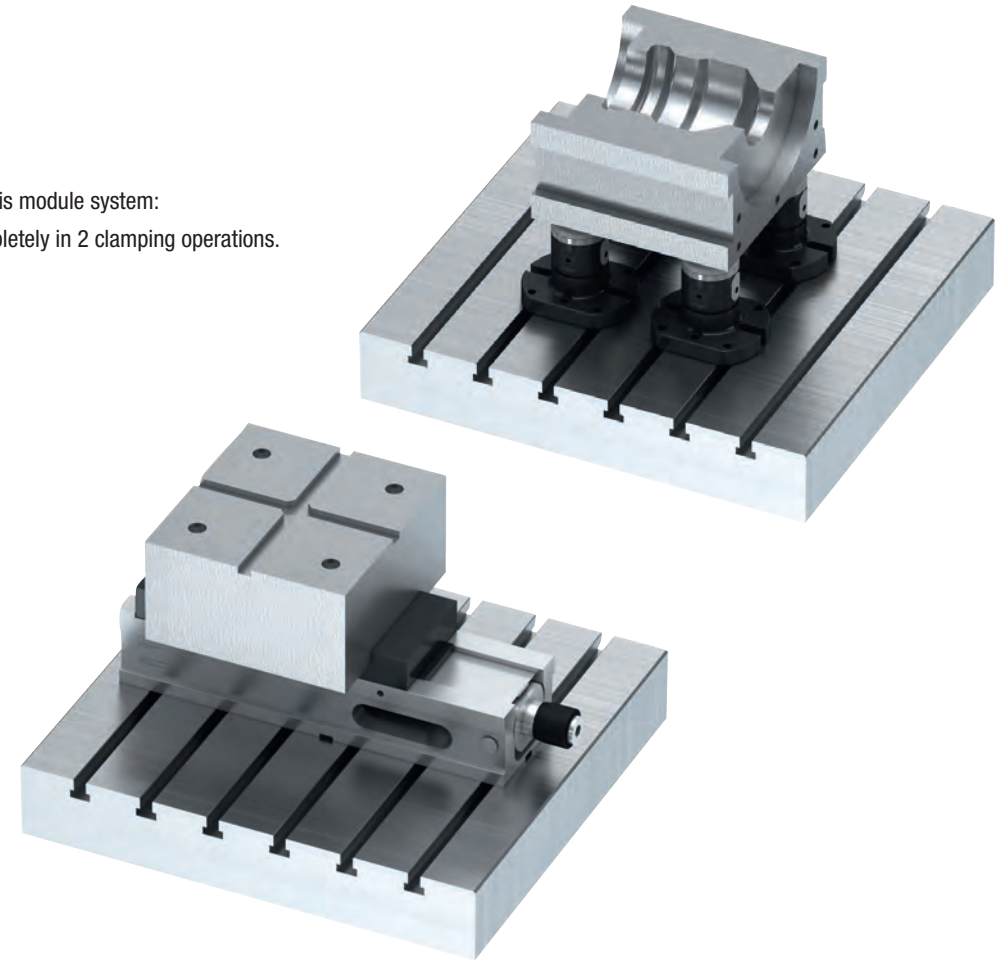

KIRÁLY TRADING KFT H-1151 Budapest Mogyoród útja 12 - 14 tel: 061307-3801 Email:pzoli@kiralytrading.hu

# Interfaces

The 5-axis module system can be mounted on T slot tables, grid systems or directly to machine tables. Moreover, the basic modules can be adapted to most common zero-point clamping systems.

## T-slot tables

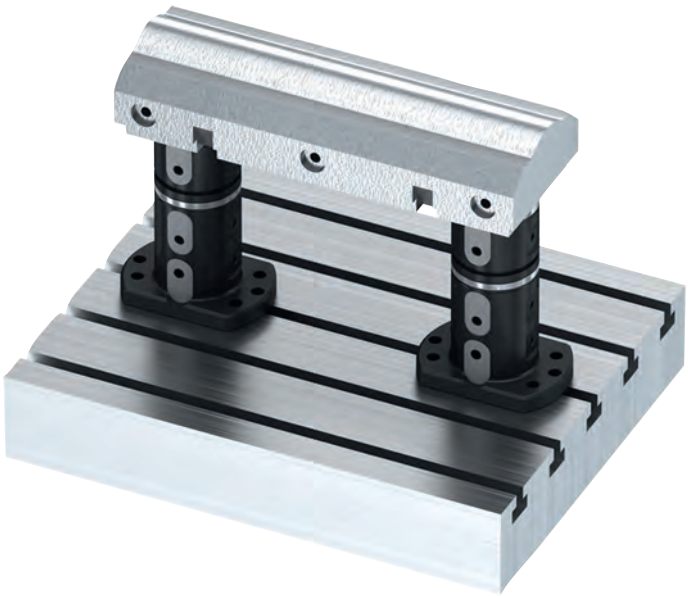

## Grid systems

## Machine tables

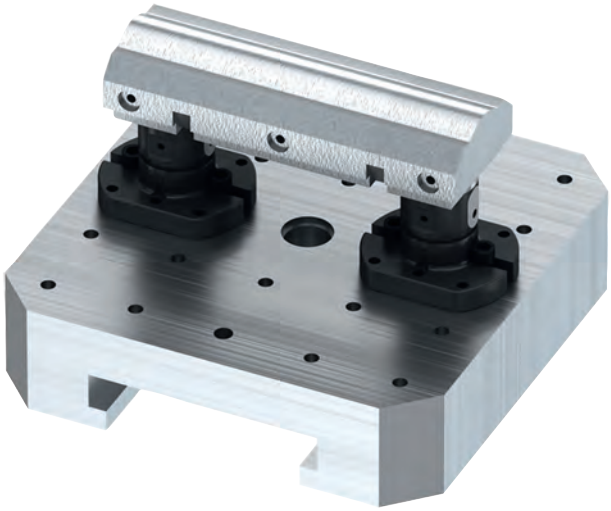

## Zero-point clamping systems

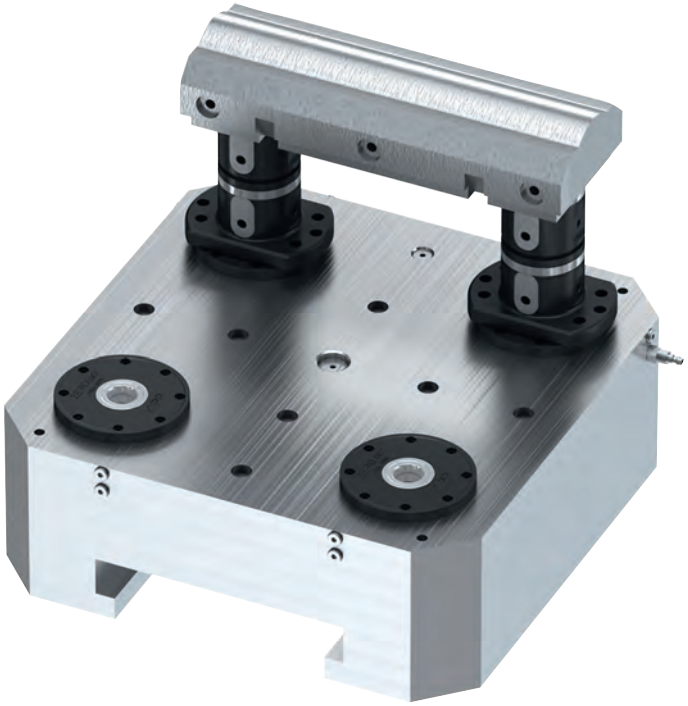

# Forces

**Fr Permissible transverse force**
**Fa Permissible clamping force**
**Fd Permissible contact force**
**Fe Clamping bolt pull-in force**

**Permissible load with full contact:**

| | | FR | Fa | Fd | Fe |
|---|---|---|---|---|---|
| Clamping pin screw M10 | kN | 30 | 35 | 100 | 25 |
| Clamping pin screw M12 | kN | 30 | 50 | 100 | 25 |
| Clamping pin screw M16 | kN | 30 | 75 | 100 | 25 |

# Applications

The workpiece is secured on one, two or more stable module columns. Additional columns can be added easily for large parts. The clamping system is actuated manually without the need for power sources and can be converted very quickly for other workpiece‘s or fixtures.
Assembling the modules is remarkably simple: position basic module (bolt on from above or below), place add-on clamp modules, position reducer adaptors with bolted-on workpiece and then use a torque wrench to tighten manually. The system is now stable and ready for 5-axis machining.

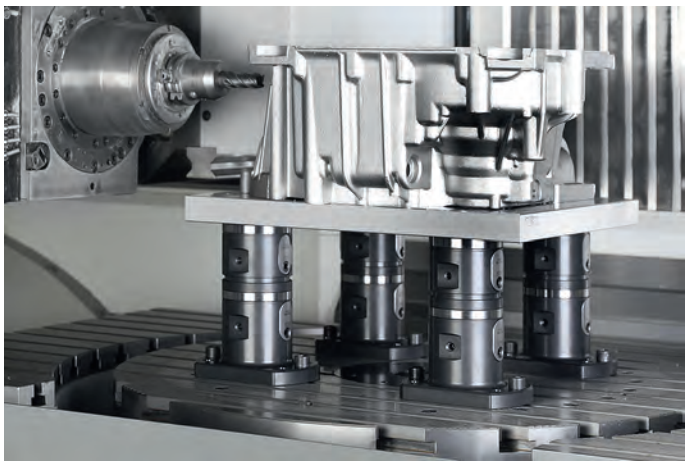

Fixture plate with gearbox housing mounted on 4 basic and add-on modules. The fixture plate is secured to the add-on modules by means of 4 clamping bolts.

**Clamping height 175 mm**

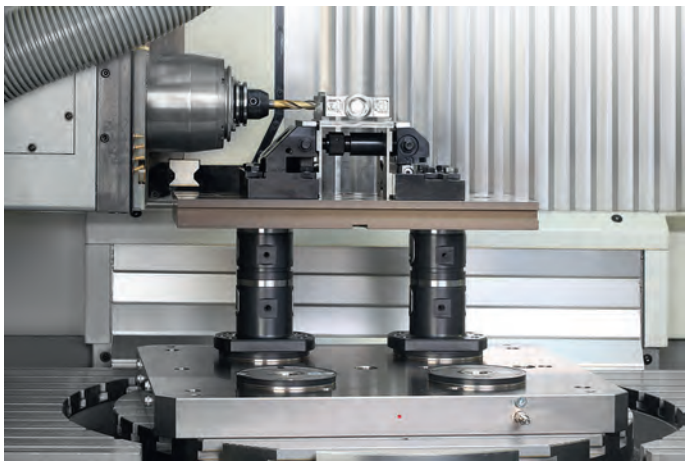

The 3-axis clamp, mounted on a T-slot plate; 2 basic modules and 2 add-on modules.

**Clamping height 325 mm**

KIRÁLY TRADING KFT H-1151 Budapest Mogyoród útja 12 - 14 tel: 061307-3801 Email:pzoli@kiralytrading.hu

# Applications

KIPP basic module with collet adaptor mounted directly on a machine table with T-slots.

**Clamping height 220 mm**

Gearbox housing mounted on 3 basic modules, 3 add-on modules and 3 reducer adaptors. The cast housing is secured to the reducer adaptors by means of socket-head screws.

**Clamping height 250 mm**

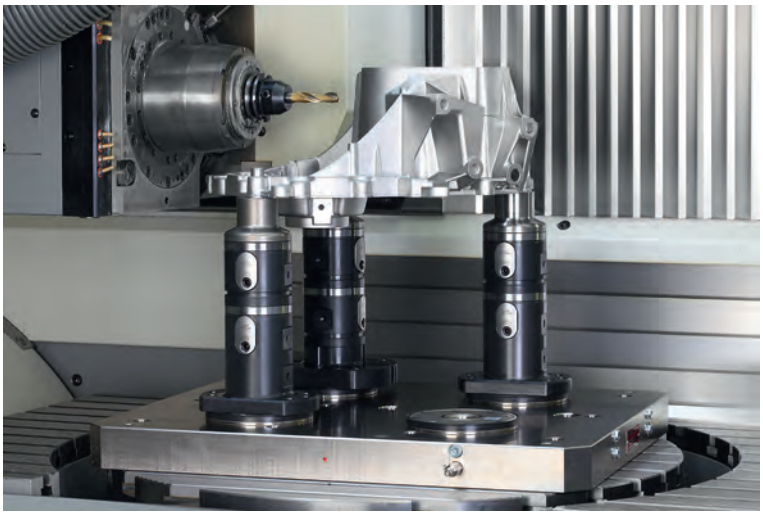

Gearbox housing mounted on 3 basic modules, 3 add-on modules and 3 reducer adaptors. The cast housing is secured to the reducer adaptors by means of 3 socket-head screws. Machining from the 6th side is possible with an angle head.

**Clamping height 225 mm**

Solid workpiece mounted on 4 basic modules and 4 add-on modules.

**Clamping height 150 mm**

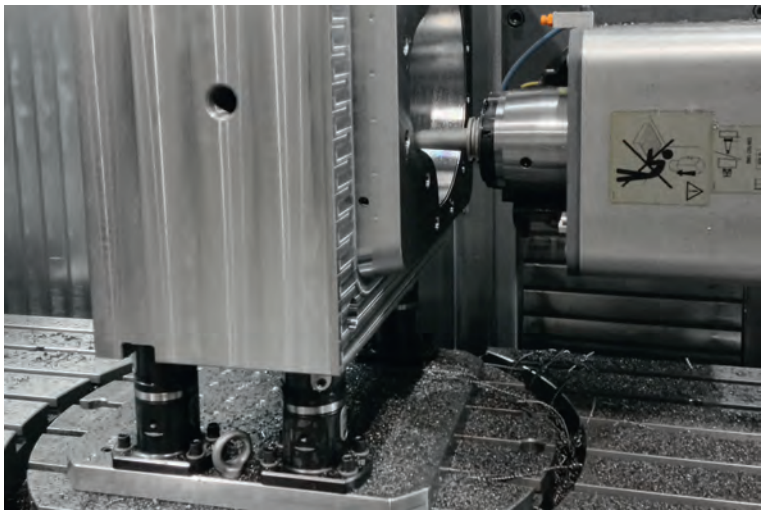

2 basic modules with a centring clamp adapted directly to a zero-point clamping system.

**Clamping height 125 mm**

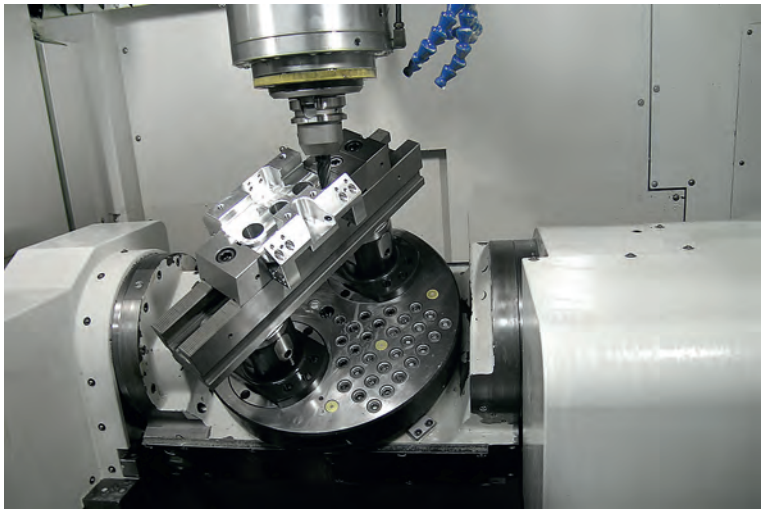

Loading procedure for mounting a long and heavy workpiece on 3 basic modules. Clamp spigots are mounted directly on the workpiece. The workpiece is positioned during clamping.

**Clamping height 100 mm**

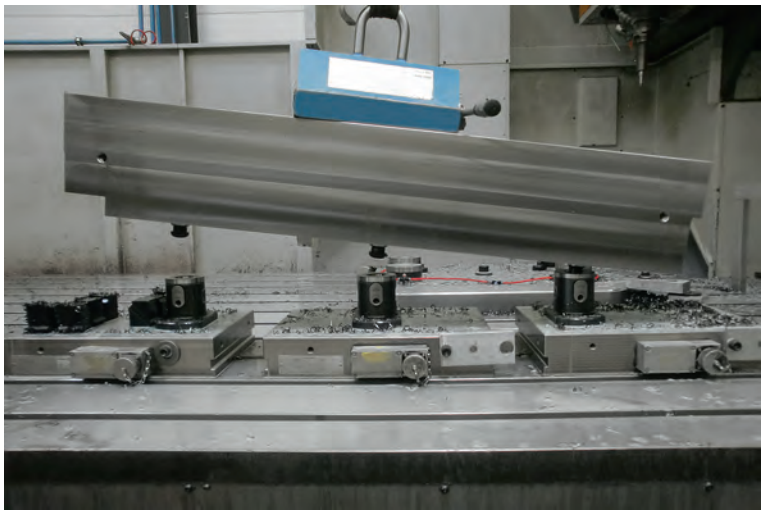

# UNI lock 5-axis basic module

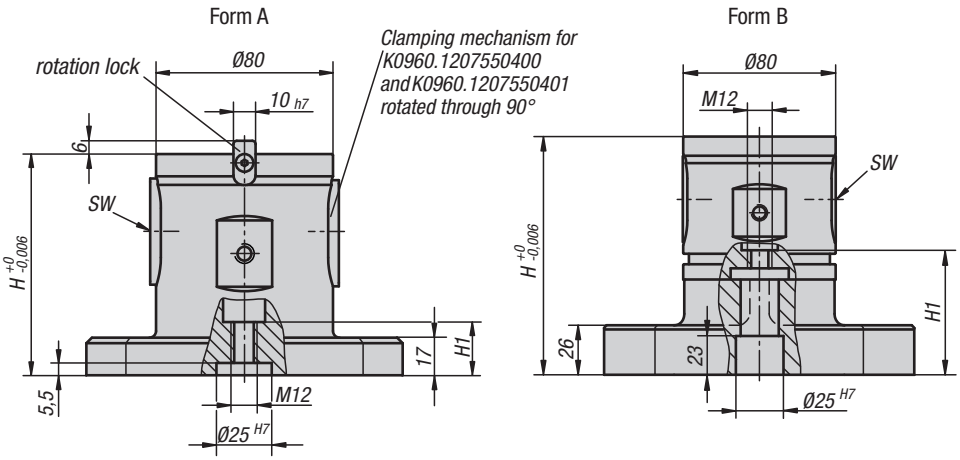


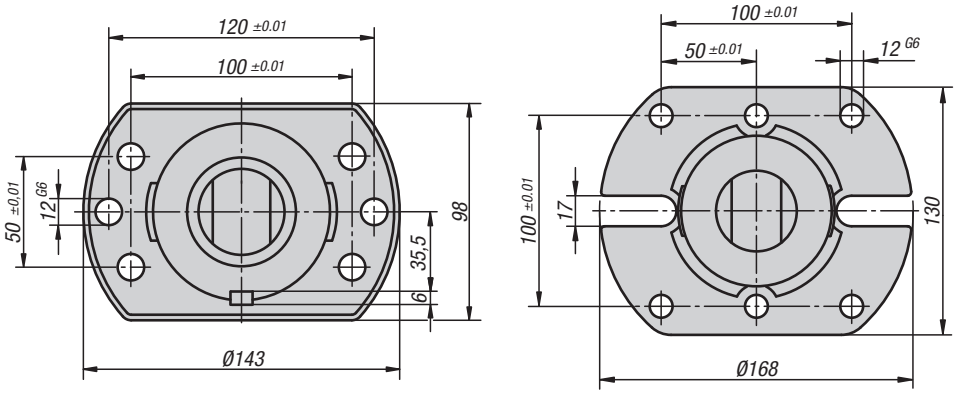


**Material:**
Steel.

**Version:**
Main body oxidised.
Contact surfaces case-hardened and ground.

**Sample order:**
K0960.1207550400

**Note:**
The UNI lock 5-axis basic module can be adapted directly to subplates with grid holes or T-slots or to tooling plates with hole pitch of 40/50 mm system size M12. Suitable for UNI lock zero point clamping system with UNI lock clamping bolts. Can also be used on the conventional zero point clamping systems by mounting an appropriate adapter clamping bolt.

## KIPP UNI lock 5-axis basic module

| Order No. | Form | Version | H | H1 | SW | Holding force F kN | Tightening torque max. Nm | Approx. weight kg |
|---|---|---|---|---|---|---|---|---|
| **K0960.1207550400** | A | without rotation lock | 75 | 18,5 | 6 | 50 | 15 | 3,90 |
| **K0960.1207550401** | A | with rotation lock | 75 | 18,5 | 6 | 50 | 15 | 3,90 |
| **K0960.1210050400** | A | without rotation lock | 100 | 24 | 6 | 50 | 15 | 4,45 |
| **K0960.1210050401** | A | with rotation lock | 100 | 24 | 6 | 50 | 15 | 4,45 |
| **K0960.12125500** | B | without rotation lock | 125 | 68,5 | 6 | 50 | 15 | 6,40 |
| **K0960.12150500** | B | without rotation lock | 150 | 74 | 6 | 50 | 15 | 7,50 |

KIRÁLY TRADING KFT H-1151 Budapest Mogyoród útja 12 - 14 tel: 061307-3801 Email:pzoli@kiralytrading.hu

# UNI lock 5-axis basic module double clamp

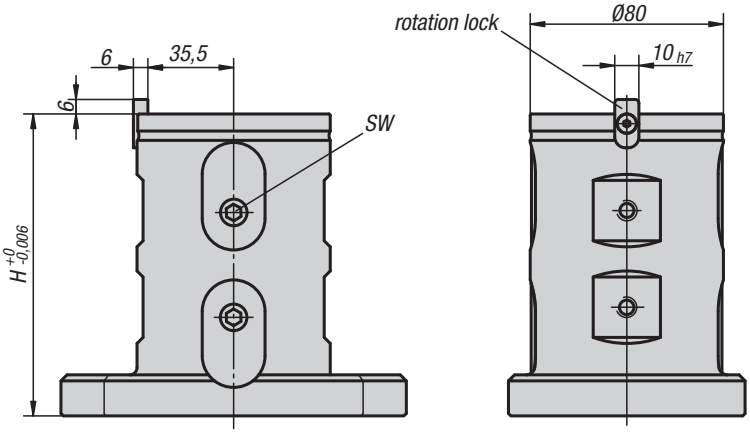


**Material:**
Steel.

**Version:**
Main body oxidised.
Contact surfaces case-hardened and ground.

**Sample order:**
K0961.1212550400

**Note:**
The UNI lock 5-axis basic module can be adapted directly to subplates with grid holes or T-slots or to tooling plates with hole pitch of 40/50 mm system size M12. Suitable for UNI lock zero point clamping system with UNI lock clamping bolts. Can also be used on the conventional zero point clamping systems by mounting an appropriate adapter clamping bolt.

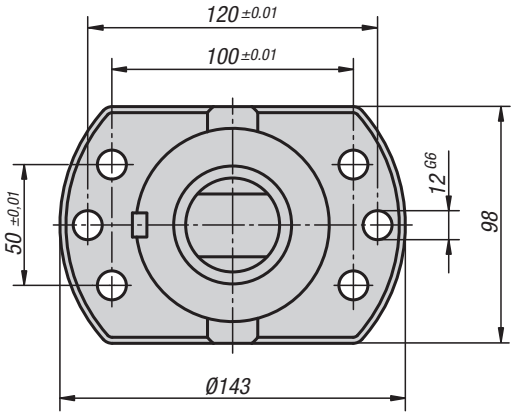


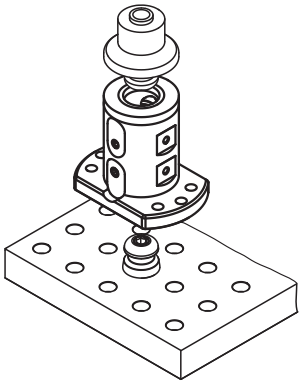

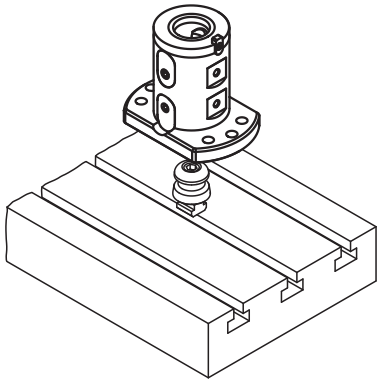

## KIPP UNI lock 5-axis basic module double clamp

| Order No. | Version | H | SW | Holding force F kN | Tightening torque max. Nm | Approx. weight kg |
|---|---|---|---|---|---|---|
| **K0961.1212550400** | without rotation lock | 125 | 6 | 50 | 15 | 4,90 |
| **K0961.1212550401** | with rotation lock | 125 | 6 | 50 | 15 | 4,90 |

KIRÁLY TRADING KFT H-1151 Budapest Mogyoród útja 12 - 14 tel: 061307-3801 Email:pzoli@kiralytrading.hu

# UNI lock 5-axis mounting base for general clamping

Form A

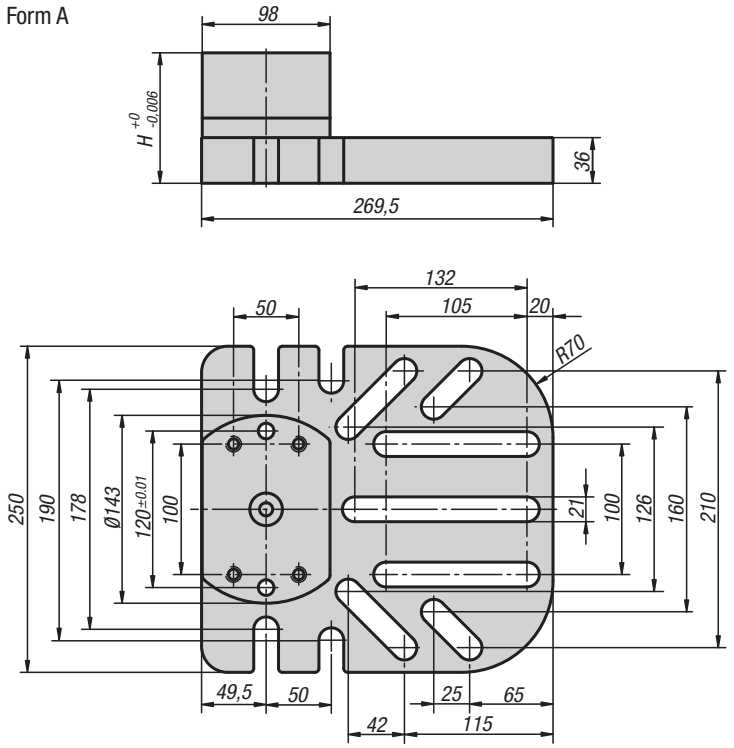

**Material:**
Steel.

**Version:**
Main body oxidised.
Contact surfaces case-hardened and ground.

**Sample order:**
K0962.25027005021

**Note:**
The UNI lock 5-axis mounting base for general clamping are adapted directly to subplates with grid holes or T-slots or tooling plates. Due to their sturdy construction, these risers are ideal as base elements for large and heavy workpieces. The layout of the fastening keyways allows for a flexible adjustment to the workpiece.

Form B

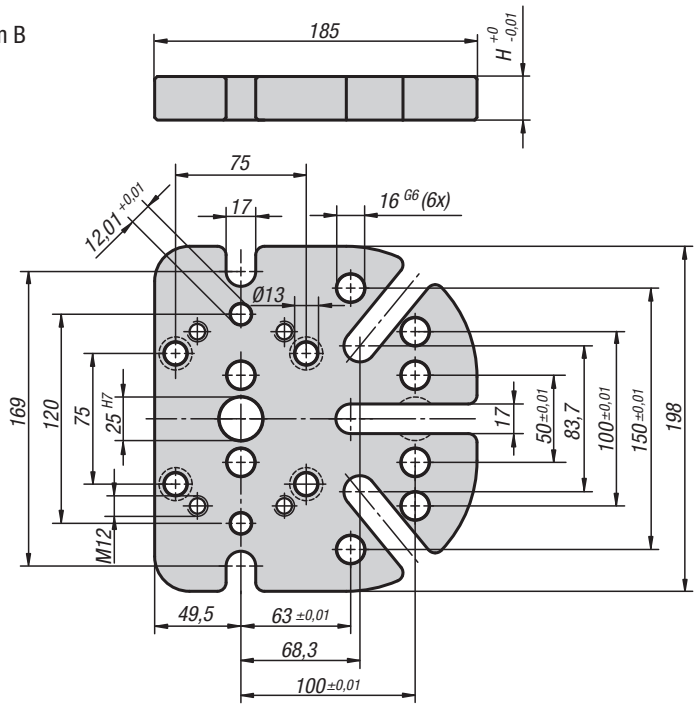


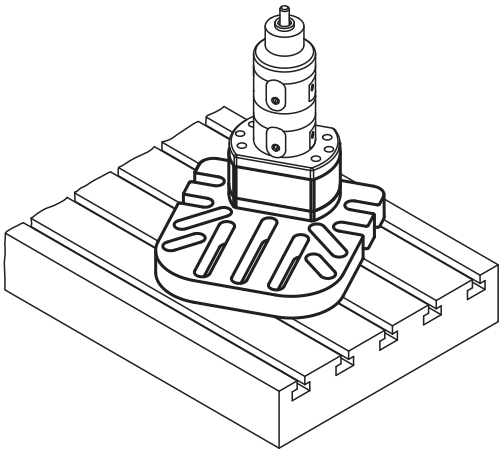

## KIPP UNI lock 5-axis mounting base for general clamping

| Order No. | Form | H | Approx. weight kg |
|---|---|---|---|
| K0962.25027005021 | A | 50 | 14 |
| K0962.25027010021 | A | 100 | 19 |
| K0962.25027012521 | A | 125 | 23 |
| K0962.19818502516 | B | 25 | 6,5 |

KIRÁLY TRADING KFT H-1151 Budapest Mogyoród útja 12 - 14 tel: 061307-3801 Email:pzoli@kiralytrading.hu

# UNI lock 5-axis add-on clamping module

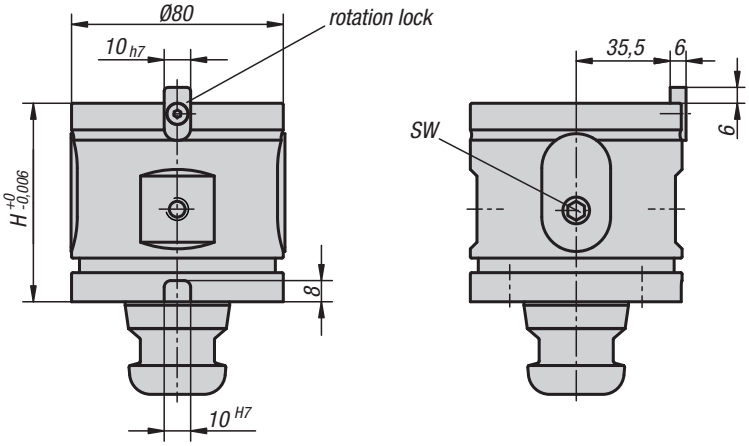


**Material:**
Steel.

**Version:**
Main body oxidised.
Contact surfaces case-hardened and ground.

**Sample order:**
K0963.120750

**Note:**
The UNI lock 5-axis add-on modules are used for raising basic modules and mounting base. Depending on the clamping situation, optimum assembly height can be achieved using a combination of the basic module and add-on module.

## KIPP UNI lock 5-axis add-on clamping module

| Order No. | Version | H | SW | Holding force F kN | Tightening torque max. Nm | Approx. weight kg |
|---|---|---|---|---|---|---|
| **K0963.120750** | without rotation lock | 75 | 6 | 50 | 15 | 2,85 |
| **K0963.120751** | with rotation lock | 75 | 6 | 50 | 15 | 2,85 |
| **K0963.121000** | without rotation lock | 100 | 6 | 50 | 15 | 3,65 |
| **K0963.121250** | without rotation lock | 125 | 6 | 50 | 15 | 4,50 |

KIRÁLY TRADING KFT H-1151 Budapest Mogyoród útja 12 - 14 tel: 061307-3801 Email:pzoli@kiralytrading.hu

# UNI lock 5-axis collet adapter

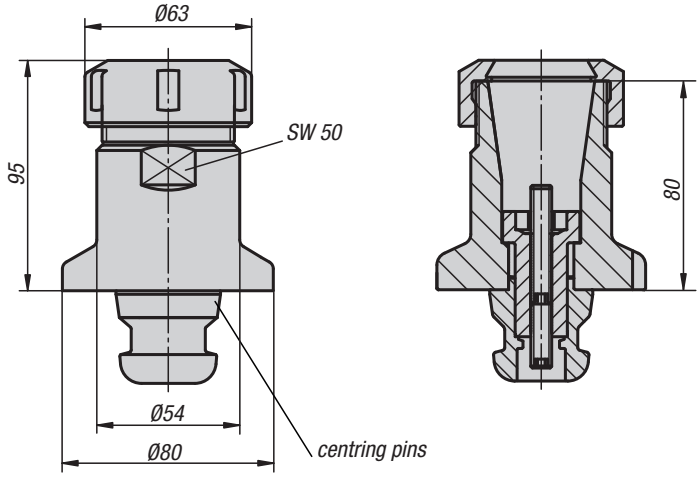


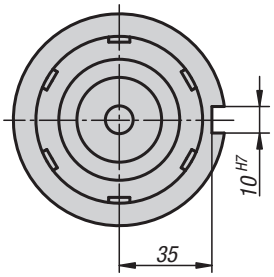


**Material:**
Steel.

**Version:**
Main body oxidised.
Contact surfaces case-hardened and ground.

**Sample order:**
K0964.25080

**Note:**
The UNI lock 5-axis collet adapter is suitable for clamping round workpieces. Standard collets with the ER 40 designation can be used. Clamping up to D=26 mm. Supplied with adjustable length stop but without collets. The collet adapters can be directly mounted on the basic module with rotation lock or on the add-on module H 75 mm with rotation lock.

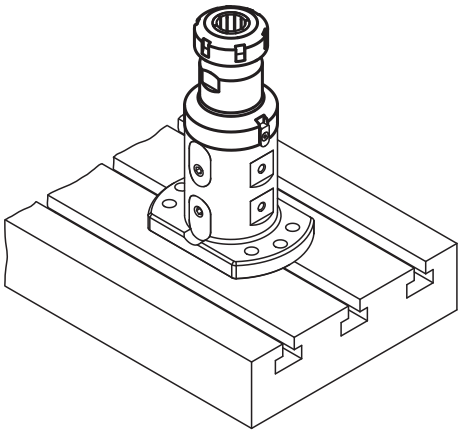

## KIPP UNI lock 5-axis collet adapter

| Order No. | Dimensions | Approx. weight kg |
|---|---|---|
| **K0964.25080** | see drawing | 1,65 |

KIRÁLY TRADING KFT H-1151 Budapest Mogyoród útja 12 - 14 tel: 061307-3801 Email:pzoli@kiralytrading.hu

# UNI lock 5-axis face-grip adapter

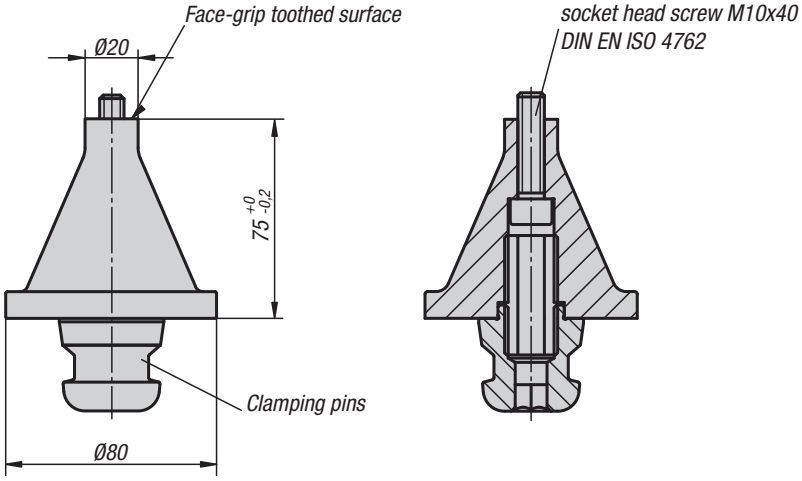


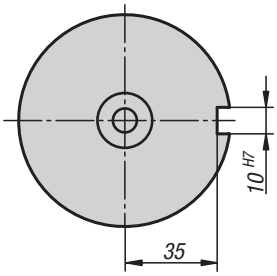


**Material:**
Steel.

**Version:**
Main body oxidised.
Contact surfaces case-hardened and ground.

**Sample order:**
K0965.2007510

**Note:**
The UNI lock 5-axis face-grip adapters are suitable for clamping workpieces, which must be machined on all sides. The workpieces are freely accessible without interfering edges from the clamping elements. The workpieces are attached from below using a socket head screw to pull them onto the face-grip toothed surface. The face-grip adapters can be directly mounted on the basic module with rotation lock or on the add-on module H 75 mm with rotation lock.

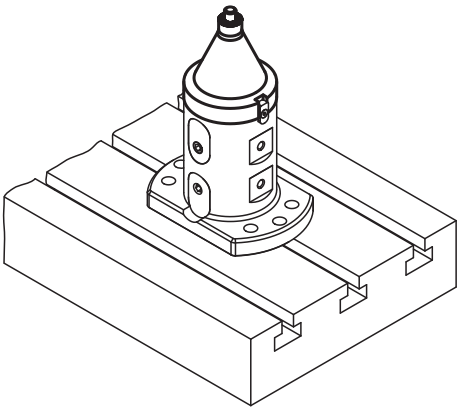

## KIPP UNI lock 5-axis face-grip adapter

| Order No. | Dimensions | Approx. weight kg |
|---|---|---|
| K0965.2007510 | see drawing | 1,65 |

K0966

# UNI lock 5-axis reducer adapter

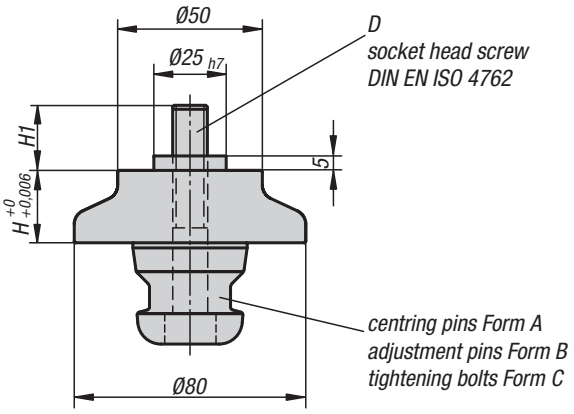


**Material:**
Steel.

**Version:**
Main body oxidised.
Contact surfaces case-hardened and ground.

**Sample order:**
K0966.501120

**Note:**
The UNI lock 5-axis reducer adapter is suitable for clamping and positioning workpieces. Reducer adapters can be screwed onto the workpiece and mounted on the basic module or add-on module. Reducer adapters are available as hard and soft versions. With the soft version any interfering edges on the adapter that project over the workpiece can be milled off.

| | |
|---|---|
| Centring pins = Form A | fixes in x and y axis (reference point) |
| Adjustment pins =Form B | fixes the free axis (bayonet pin) |
| Tightening bolts = Form C | Pins with undersize (no centring function, clamping only) |

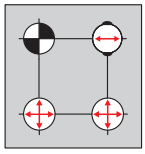

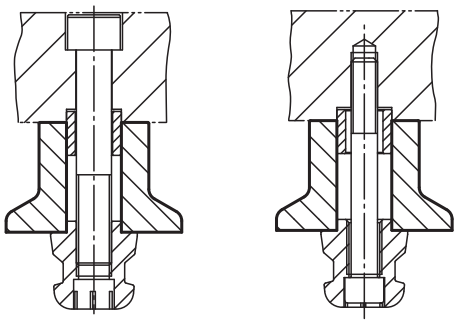

## KIPP UNI lock 5-axis reducer adapter

| Order No. soft | Order No. hard | Form | D | H | H1 | Approx. weight kg |
|---|---|---|---|---|---|---|
| K0966.251100 | K0966.251101 | A | M10x75 | 25 | 25,5 | 0,88 |
| K0966.252100 | K0966.252101 | B | M10x75 | 25 | 25,5 | 0,88 |
| K0966.253100 | K0966.253101 | C | M10x75 | 25 | 25,5 | 0,88 |
| K0966.501100 | K0966.501101 | A | M10x100 | 50 | 25,5 | 1,17 |
| K0966.502100 | K0966.502101 | B | M10x100 | 50 | 25,5 | 1,17 |
| K0966.503100 | K0966.503101 | C | M10x100 | 50 | 25,5 | 1,17 |
| K0966.251120 | K0966.251121 | A | M12x75 | 25 | 27,5 | 0,88 |
| K0966.252120 | K0966.252121 | B | M12x75 | 25 | 27,5 | 0,88 |
| K0966.253120 | K0966.253121 | C | M12x75 | 25 | 27,5 | 0,88 |
| K0966.501120 | K0966.501121 | A | M12x100 | 50 | 27,5 | 1,17 |
| K0966.502120 | K0966.502121 | B | M12x100 | 50 | 27,5 | 1,17 |
| K0966.503120 | K0966.503121 | C | M12x100 | 50 | 27,5 | 1,17 |

# K0966

## UNI lock 5-axis reducer adapter

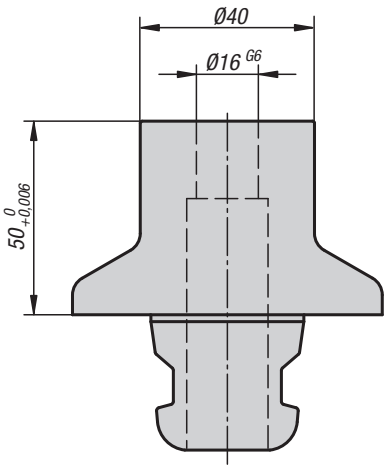

**Material:**
Steel.

**Version:**
Body oxidised.
Contact surfaces case-hardened and ground.

**Sample order:**
K0966.501120

**Note:**
The UNI lock 5-axis reducer adaptors are suitable for clamping and positioning workpieces.
The workpiece is positioned and screwed to the reducer adapter using the UNI lock shoulder screw for workpiece fastening.

### UNI lock 5-axis reducer adapter

| Order No. | Dimensions |
|---|---|
| K0966.501161 | see drawing |

# K1013

## Angle clamping adapter

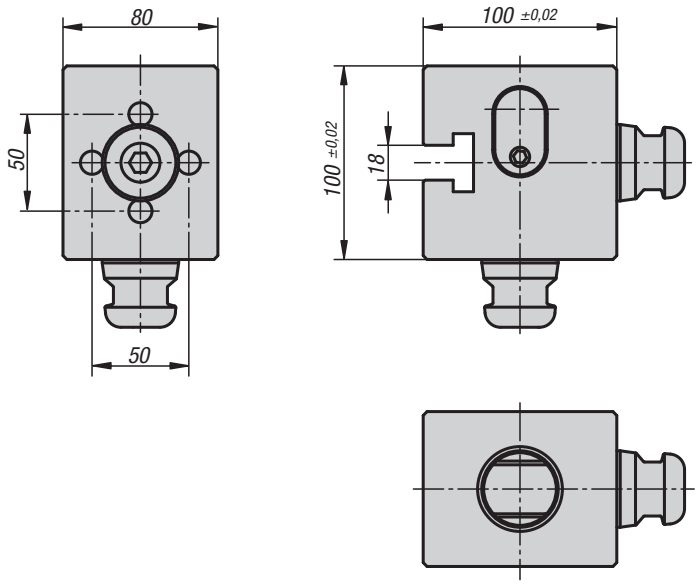

**Material:**
Steel.

**Version:**
Main body oxidised.
Contact surfaces case-hardened and ground.

**Sample order:**
K1013.100100080

**Note:**
The angle clamp adapter can be used to process workpieces in different processing levels.
In doing so, the workpiece stays mounted on the angle clamping adapter.

### Angle clamping adapter

| Order No. | Dimensions |
|---|---|
| K1013.100100080 | see drawing |

KIRÁLY TRADING KFT H-1151 Budapest Mogyoród útja 12 - 14 tel: 061307-3801 Email:pzoli@kiralytrading.hu

# UNI lock clamping bolt

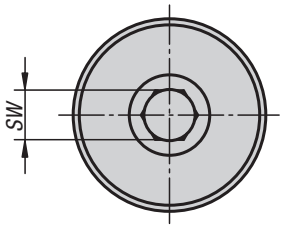

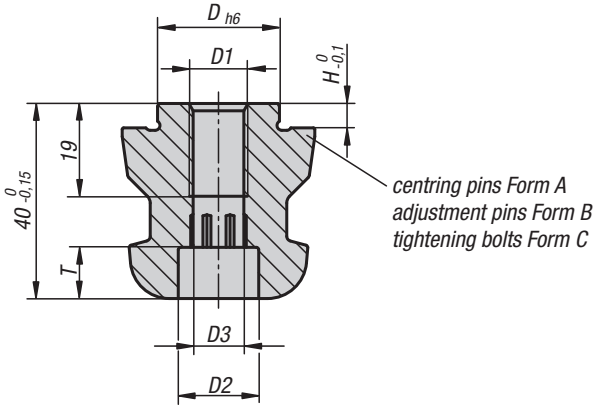


**Material:**
Steel.

**Version:**
Hardened and black oxidised.
Contact faces ground.

**Sample order:**
K0967.140160512

**Note:**
The UNI lock clamping bolt is suitable for clamping and positioning workpieces and fixtures. Clamping bolts are screwed onto the exchange element and adapted to the various basic modules.

| | |
|---|---|
| Centring pins = Form A | fixes in x and y axis (reference point) |
| Adjustment pins =Form B | fixes the free axis (bayonet pin) |
| Tightening bolts = Form C | Pins with undersize (no centring function, clamping only) |

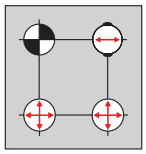

1 = fastening with grub screw DIN 913
2 = fastening with DIN 912 screw through the tightening bolt
3 = fastening with DIN 912 screw through the fixture or workpiece

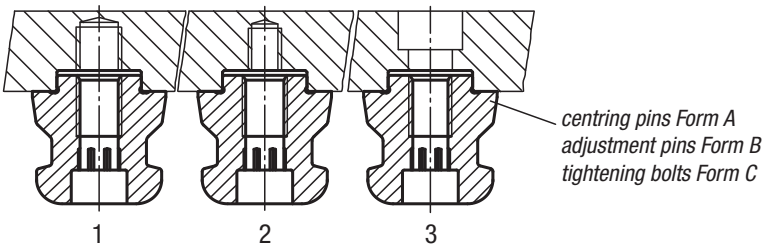


## KIPP UNI lock clamping bolt

| Order No. | Form | D | D1 | D2 | D3 | H | T | SW | Approx. weight kg |
|---|---|---|---|---|---|---|---|---|---|
| **K0967.140160512** | A | 16 | M12 | 16,5 | 10,3 | 5 | 10,5 | 10 | 0,2 |
| **K0967.140180512** | A | 18 | M12 | 16,5 | 10,3 | 5 | 10,5 | 10 | 0,2 |
| **K0967.140200512** | A | 20 | M12 | 16,5 | 10,3 | 5 | 10,5 | 10 | 0,2 |
| **K0967.140250212** | A | 25 | M12 | 16,5 | 10,3 | 5 | 10,5 | 10 | 0,2 |
| **K0967.140250516** | A | 25 | M16 | 18,5 | 14,2 | 5 | 12,5 | 17 | 0,2 |
| **K0967.140251012** | A | 25 | M12 | 16,5 | 10,3 | 10 | 10,5 | 10 | 0,2 |
| **K0967.140251016** | A | 25 | M16 | 18,5 | 14,2 | 10 | 12,5 | 17 | 0,2 |
| **K0967.240250512** | B | 25 | M12 | 16,5 | 10,3 | 5 | 10,5 | 10 | 0,2 |
| **K0967.240250516** | B | 25 | M16 | 18,5 | 14,2 | 5 | 12,5 | 17 | 0,2 |
| **K0967.240251012** | B | 25 | M12 | 16,5 | 10,3 | 10 | 10,5 | 10 | 0,2 |
| **K0967.240251016** | B | 25 | M16 | 18,5 | 14,2 | 10 | 12,5 | 17 | 0,2 |
| **K0967.340250512** | C | 25 | M12 | 16,5 | 10,3 | 5 | 10,5 | 10 | 0,2 |
| **K0967.340250516** | C | 25 | M16 | 18,5 | 14,2 | 5 | 12,5 | 17 | 0,2 |
| **K0967.340251012** | C | 25 | M12 | 16,5 | 10,3 | 10 | 10,5 | 10 | 0,2 |
| **K0967.340251016** | C | 25 | M16 | 18,5 | 14,2 | 10 | 12,5 | 17 | 0,2 |

KIRÁLY TRADING KFT H-1151 Budapest Mogyoród útja 12 - 14 tel: 061307-3801 Email:pzoli@kiralytrading.hu

# UNI lock 5-axis clamping bolt

for fastening to workpieces

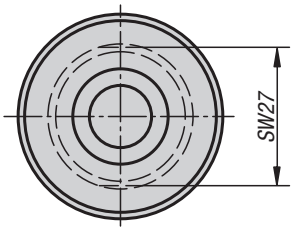


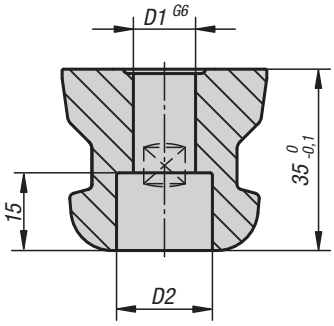


**Material:**
Steel.

**Version:**
Hardened and black oxidised.
Contact faces ground.

**Sample order:**
K0968.12

**Note:**
The UNI lock 5-axis clamping bolt is suitable for clamping and positioning the workpiece. Clamping bolts are screwed onto the workpiece and positioned on the basic module or add-on module. Using the locating bolts (K0970, K0971), the clamping bolts are screwed onto the workpiece.

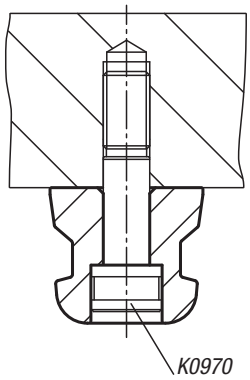


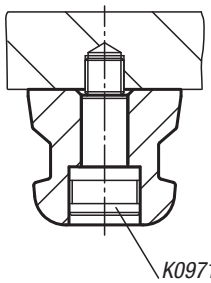


**KIPP UNI lock 5-axis clamping bolts for fastening to workpieces.**

| Order No. | D1 | D2 | Approx. weight kg |
|---|---|---|---|
| **K0968.12** | 12 | 18,4 | 0,2 |
| **K0968.16** | 16 | 21,1 | 0,2 |

KIRÁLY TRADING KFT H-1151 Budapest Mogyoród útja 12 - 14 tel: 061307-3801 Email:pzoli@kiralytrading.hu

# UNI lock 5-axis T-slot centring clamp bolt

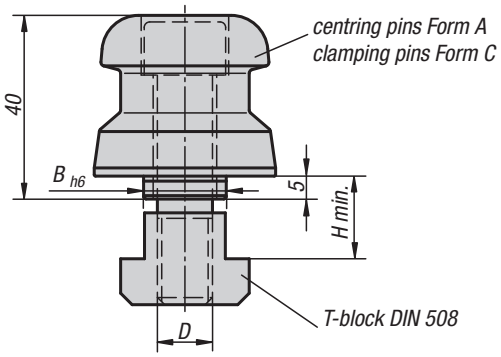


**Material:**
Steel.

**Version:**
Hardened and black oxidised.
Contact faces ground.

**Sample order:**
K0969.114

**Note:**
The UNI lock 5-axis T-slot centring clamp bolt is suitable for clamping and positioning the basic module with double manual clamping. T-slot centring clamp bolts are positioned and fastened on the T-slot machine table.

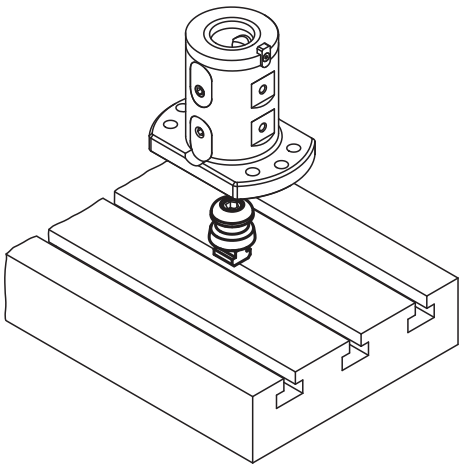

## KIPP UNI lock 5-axis T-slot centring clamp bolt

| Order No. | Form | D | B | H min. | Approx. weight kg |
|---|---|---|---|---|---|
| **K0969.114** | A | M12 | 14 | 14 | 0,25 |
| **K0969.118** | A | M16 | 18 | 18 | 0,35 |
| **K0969.122** | A | M16 | 22 | 22 | 0,45 |
| **K0969.314** | C | M16 | 14 | 14 | 0,25 |
| **K0969.318** | C | M16 | 18 | 18 | 0,35 |
| **K0969.322** | C | M16 | 22 | 22 | 0,45 |

K0970

# UNI lock 5-axis locating bolts

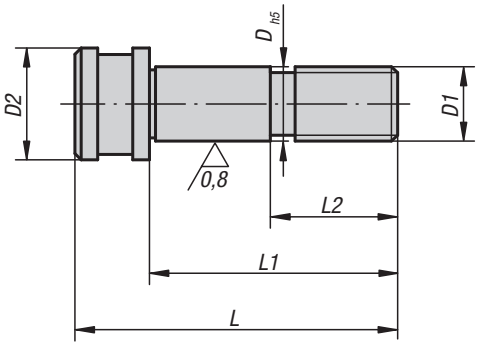


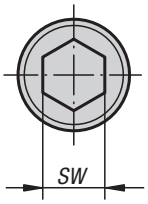


**Material:**
Carbon steel.

**Version:**
Hardened surface.
ground locating seat.

**Sample order:**
K0970.12050

**Note:**
The UNI lock 5-axis locating bolts are suitable for clamping and positioning the clamping bolts for fastening to workpieces. They are also used for positioning and fastening the basic module.

## KIPP UNI lock 5-axis locating bolts

| Order No. | D | D1 | D2 | L | L1 | L2 | SW | Approx. weight kg |
|---|---|---|---|---|---|---|---|---|
| **K0970.12050** | 12 | M12 | 18 | 62 | 50 | 22 | 10 | 0,07 |
| **K0970.16055** | 16 | M16 | 24 | 71 | 55 | 25 | 14 | 0,12 |

KIRÁLY TRADING KFT H-1151 Budapest Mogyoród útja 12 - 14 tel: 061307-3801 Email:pzoli@kiralytrading.hu

# UNI lock 5-axis locating bolts

for fastening to workpieces

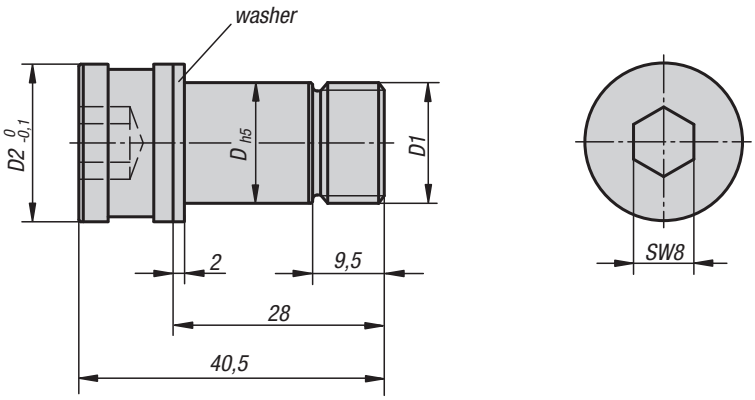


**Material:**
Carbon steel.

**Version:**
Hardened surface.
ground locating seat.

**Sample order:**
K0971.1210040

**Note:**
The UNI lock 5-axis locating bolts for fastening to workpieces are suitable for clamping and positioning workpieces. These locating bolts are passed through the clamping bolts for fastening to workpieces, screwed directly into the workpiece and positioned on the basic module or add-on module. The thread is used for fastening and positioning the workpiece.

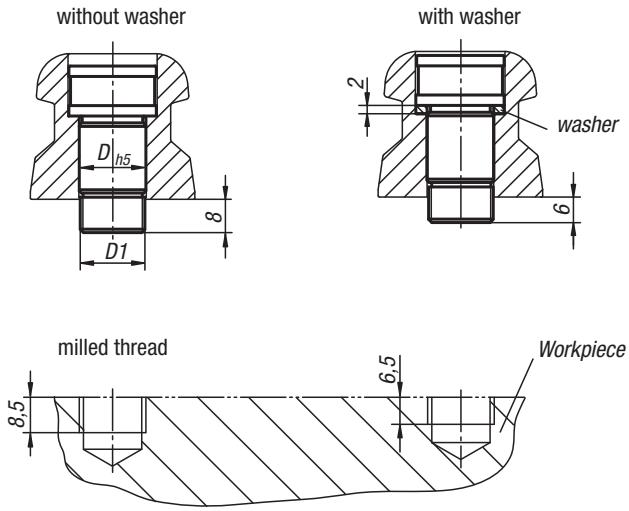


## KIPP UNI lock 5-axis locating bolts for fastening to workpieces.

| Order No. | D | D1 | D2 | Approx. weight kg |
|---|---|---|---|---|
| K0971.1210040 | 12 | M10x1,25 | 18 | 0,068 |
| K0971.12101040 | 12 | M10x1,5 | 18 | 0,068 |
| K0971.1212040 | 12 | M12x1,25 | 18 | 0,068 |
| K0971.12121040 | 12 | M12x1,75 | 18 | 0,068 |
| K0971.1612040 | 16 | M12x1,25 | 20,9 | 0,08 |
| K0971.16121040 | 16 | M12x1,75 | 20,9 | 0,08 |
| K0971.1616040 | 16 | M16x1,25 | 20,9 | 0,08 |
| K0971.16161040 | 16 | M16x2 | 20,9 | 0,08 |

KIRÁLY TRADING KFT H-1151 Budapest Mogyoród útja 12 - 14 tel: 061307-3801 Email:pzoli@kiralytrading.hu

# Centring clamping bolt

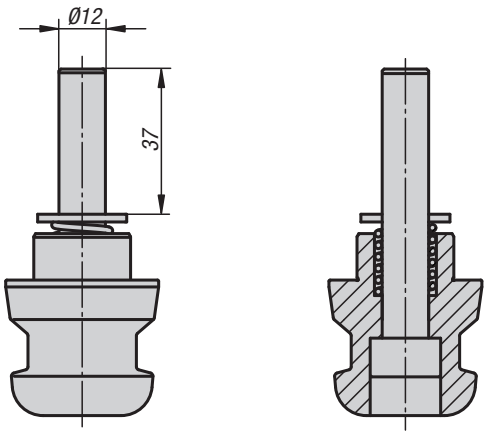

**Material:**
Steel.

**Version:**
Hardened and black oxidised.
Contact faces ground.

**Sample order:**
K1012.1240

**Note:**
The centering clamping bolt can be used to position basic modules on machine tables.
Centring clamping bolts can be clamped in collet holders. The position of the module is defined via the machine's spindle/control unit.

## Centring clamping bolt

| Order No. | Dimensions |
|---|---|
| K1012.1240 | see drawing |

# Notes

KIRÁLY TRADING KFT H-1151 Budapest Mogyoród útja 12 - 14 tel: 061307-3801 Email:pzoli@kiralytrading.hu

# Vice Clamping System

**Machinable collet system**
**5-axis clamping system compact**
**5-axis clamping system**
**Centric vice**

# Technical information for Machinable Collet System

## The clamping system for prototypes, samples and small to medium production series.

The machinable collet system consists of a base element with a flange plate and the machinable collet. To clamp a wide variety of workpieces only the collet needs to be exchanged, the base element with flange plate remain the same. Standard aluminium collet blanks are used for clamping workpieces. The contour of the workpiece to be clamped is machined into this collet blank.

Both external and internal contours can be clamped with the machinable collet system. Different collets for internal and external clamping are available for this purpose.

The integrated spring package generates a clamping force of 5.8 kN. The clamping force can be raised to 43.5 kN by pneumatic post-clamping.

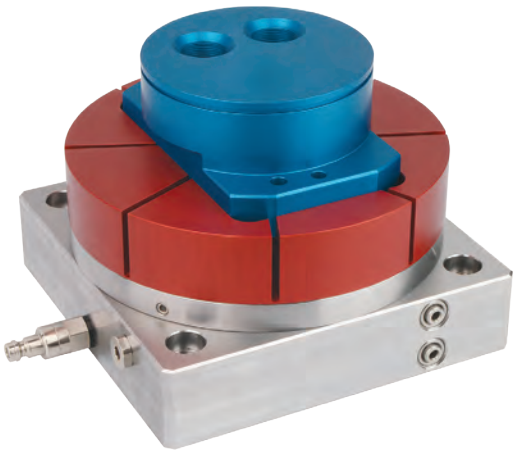

## Machinable collets for workpieces that couldn't otherwise be clamped

- whether geometrical or free-form: you have full control of the most difficult workpiece contours
- can be set up on grid plates, T-slot plates and your own fixtures
- clamping range of 25 - 140 mm and workpiece weights up to 25 kg
- clamps rough parts, machined parts, round and irregular-shaped parts
- low clamping depth of 1 mm can be achieved
- designed for external and internal clamping
- repeat accuracy of < 0.01 mm

## Machinable collet clamping and holding force

| spring release pressure | spring clamping force | spring retaining force | post-clamping pressure | post-clamping force | post-clamping retaining force |
|---|---|---|---|---|---|
| 6 bar | 5.81 kN | 2.8 kN | 6 bar | 13.39 kN | 10.39 kN |
| 6 bar | 5.81 kN | 2.8 kN | 12 bar | 20.93 kN | 17.93 kN |
| 6 bar | 5.81 kN | 2.8 kN | 30 bar | 43.55 kN | 40.55 kN |

## Machinable collet - system construction

| pos. | description | piece |
|---|---|---|
| 1 | collet | 1 |
| 2 | flange plate | 1 |
| 3 | piston | 1 |
| 4 | spring package | 8 |
| 5 | screw / tension cone | 2 |
| 6 | base element | 1 |

P1 Release collet with compressed air pistol connection
P2 Post-clamp with compressed air pistol connection

1

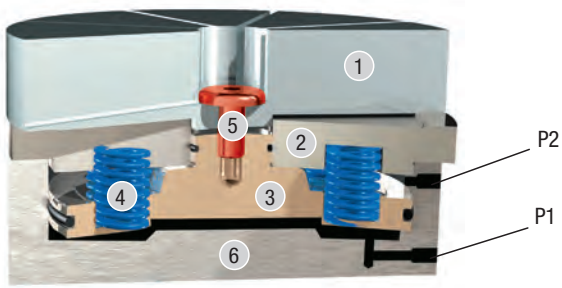

KIRÁLY TRADING KFT H-1151 Budapest Mogyoród útja 12 - 14 tel: 061307-3801 Email:pzoli@kiralytrading.hu

# Machinable collet system

for self-installation

view A-A
external clamping

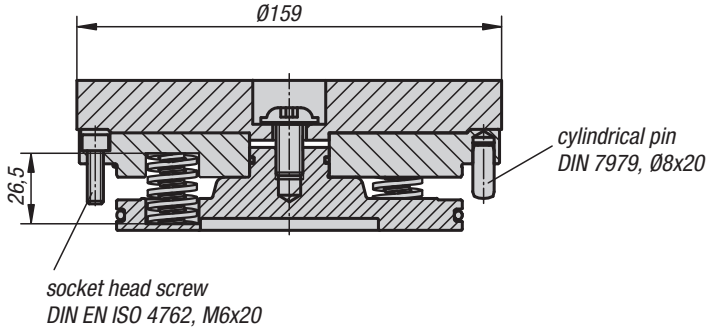


view B-B
internal clamping

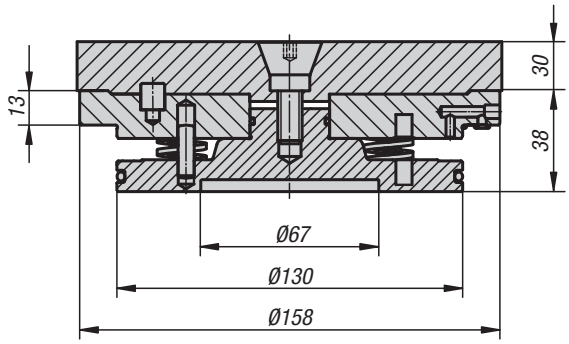


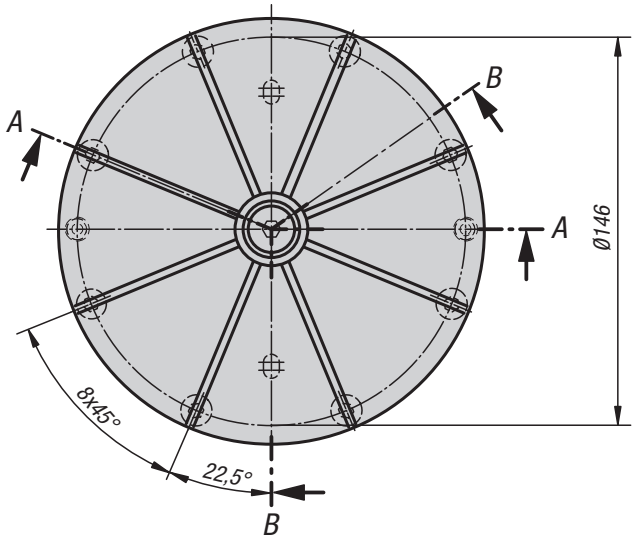


**Material:**
Flange plate, pistons and body steel.
Seals NBR.
Screws DIN EN ISO 4762 grade 8.8.
Collet aluminium.

**Version:**
Flange plate, piston and body rust-resistant, bright.
Screws galvanized.
Collet red or clear anodized.

**Sample order:**
K0500.116030

**Note:**
The machinable collet system is suitable for mounting on fixtures and clamping systems. Collets for external and internal clamping can be mounted on the flange plate. The contour of the workpiece to be clamped is machined into the collet. Free-form and asymmetrical contours can be clamped.

The integrated spring package generates a clamping force of 5.8 kN. The clamping force can be raised to 43.5 kN by pneumatic post-clamping. The clamp is released by blowing compressed air onto the lower piston surface pushing the piston upwards and releasing the clamping force on the collet.
Clamping travel 0.2 mm.
Repeat accuracy < 0.01 mm.

Installation dimensions on request.

**Accessories:**
Collet for external or internal clamping K0502

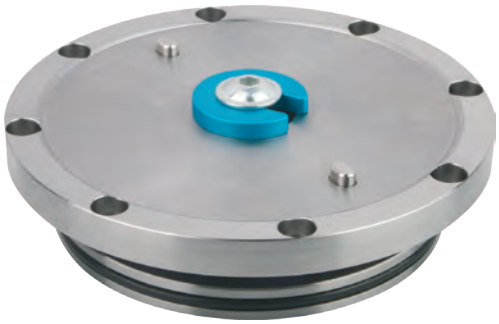

Illustration without collet with transport lock

## KIPP Machinable collet system for self-installation

| Order No. | Version | Clamping range min. - max. | Milling depth min./max. | Workpiece weight max. (kg) |
|---|---|---|---|---|
| **K0500.116030** | outer clamping | Ø 25 - Ø 140 | 1/20 | 25 |
| **K0500.216030** | inner clamping | Ø 25 - Ø 140 | 1/20 | 25 |

KIRÁLY TRADING KFT H-1151 Budapest Mogyoród útja 12 - 14 tel: 061307-3801 Email:pzoli@kiralytrading.hu

# Machinable collet system

for grid plates

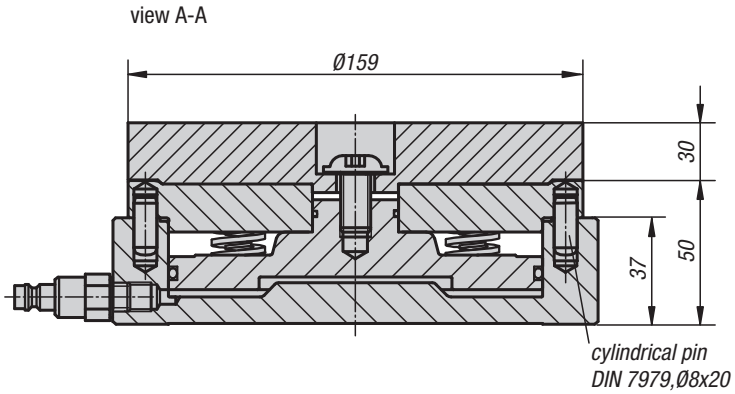


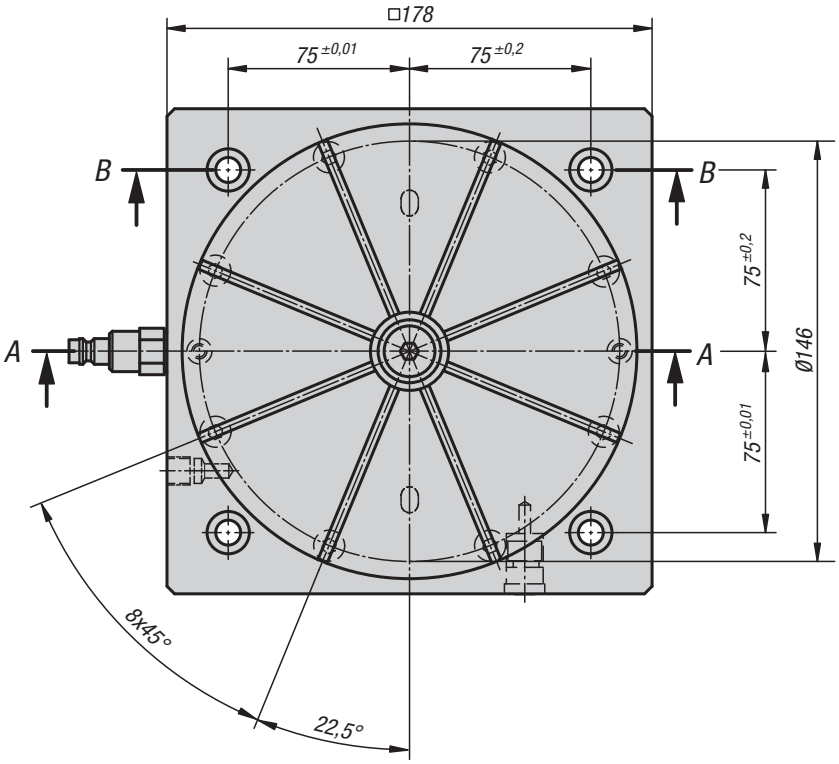


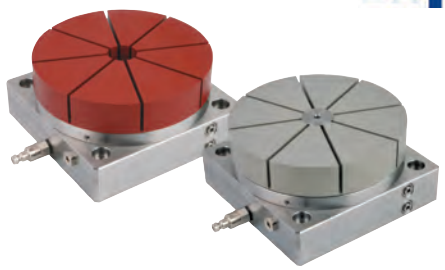

**Material:**
Flange plate, pistons and body steel.
Seals NBR.
Screws DIN EN ISO 4762 grade 8.8.
Collet aluminium.

**Version:**
Flange plate, piston and body rust-resistant, bright.
Screws galvanized.
Collet red or clear anodized.

**Sample order:**
K0501.11603050

**Note:**
Machinable collet system with base plate for mounting on 50mm pitch grid plates. The flange plate can be used for external or internal clamping collets. The contour of the workpiece to be clamped is machined into the collet. Free-form and asymmetrical contours can be clamped.

The integrated spring package generates a clamping force of 5.8 kN. The clamping force can be raised to 43.5 kN by pneumatic post-clamping. The clamp is released by blowing compressed air onto the lower piston surface pushing the piston upwards and releasing the clamping force on the collet.
Clamping travel 0.2 mm.
Repeat accuracy < 0.01 mm.

**Accessories:**
Collet for external or internal clamping K0502

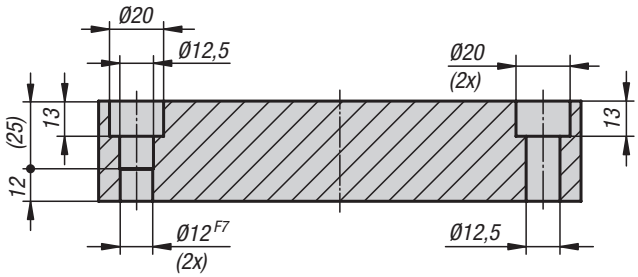


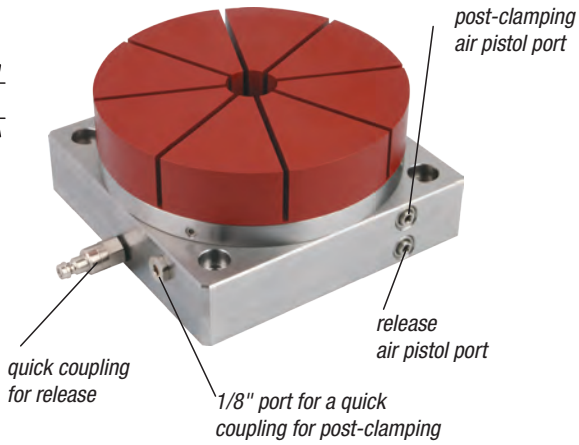


## KIPP Machinable collet system for grid plates

| Order No. | Version | Clamping range min. - max. | Milling depth min./max. | Workpiece weight max. (kg) | Suitable shoulder screw |
|---|---|---|---|---|---|
| **K0501.11603050** | outer clamping | Ø 25 - Ø 140 | 1 / 20 | 25 | K0815.12055 |
| **K0501.21603050** | inner clamping | Ø 25 - Ø 140 | 1 / 20 | 25 | K0815.12055 |

KIRÁLY TRADING KFT H-1151 Budapest Mogyoród útja 12 - 14 tel: 061307-3801 Email:pzoli@kiralytrading.hu

# Collets

for external or internal clamping

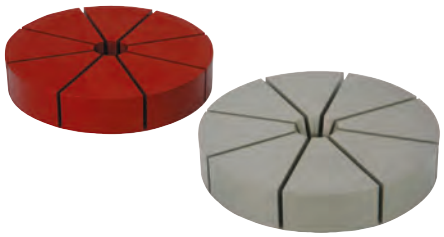

external clamping

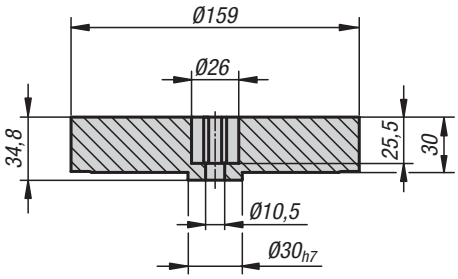


internal clamping

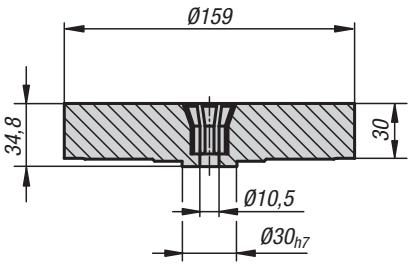


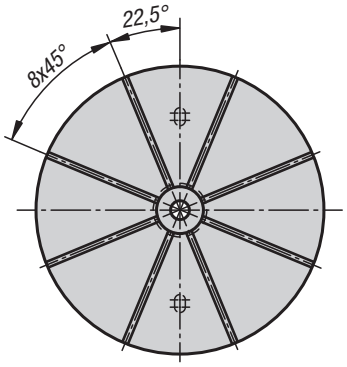


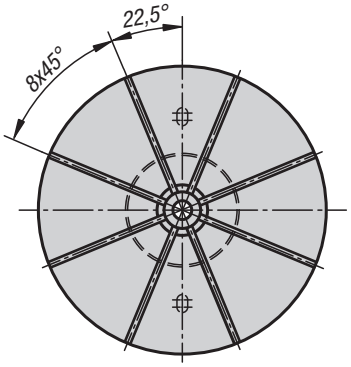


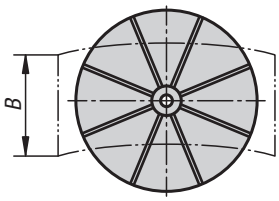


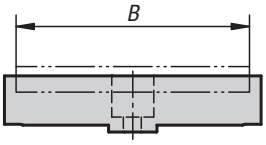


The workpiece width "B" should be maximum 90% of the collet diameter.
In special cases the workpiece may also project over the collet.

**Material, version:**
High-strength aluminium, red (external clamping) or clear (internal clamping), anodized.

**Sample order:**
K0502.116030

**Note:**
Collet for clamping external or internal contours. The contour of the workpiece to be clamped is machined into the collet. Free-form and asymmetrical contours can be clamped.

Clamping travel 0.2 mm.

Tension cone K0502.1024 is required for internal clamping collets.

**Accessories:**
Tension cone K0502.1024

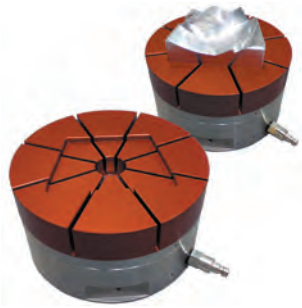

external clamping

internal clamping

## KIPP Collets for external or internal clamping

| Order No. | Version | Clamping range min. - max. | Milling depth min./max. | Workpiece weight max. (kg) |
|---|---|---|---|---|
| **K0502.116030** | external clamping | Ø 25 - Ø 140 | 1 / 20 | 25 |
| **K0502.216030** | internal clamping | Ø 25 - Ø 140 | 1 / 20 | 25 |

KIRÁLY TRADING KFT H-1151 Budapest Mogyoród útja 12 - 14 tel: 061307-3801 Email:pzoli@kiralytrading.hu

# Tension cone

for internal clamping collet

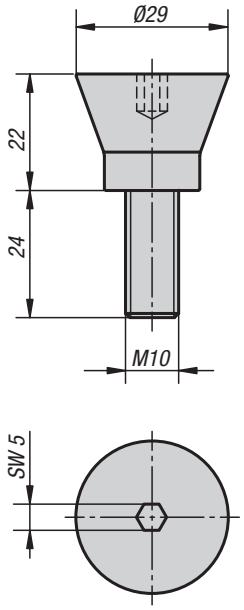

**Material:**
Carbon steel.

**Version:**
Bright.

**Sample order:**
K0502.1024

**Accessories:**
Collet for internal clamping K0502.216030

## KIPP Tension cone for internal clamping collet

| Order No. | Suitable for |
|---|---|
| K0502.1024 | Mandrel collet |

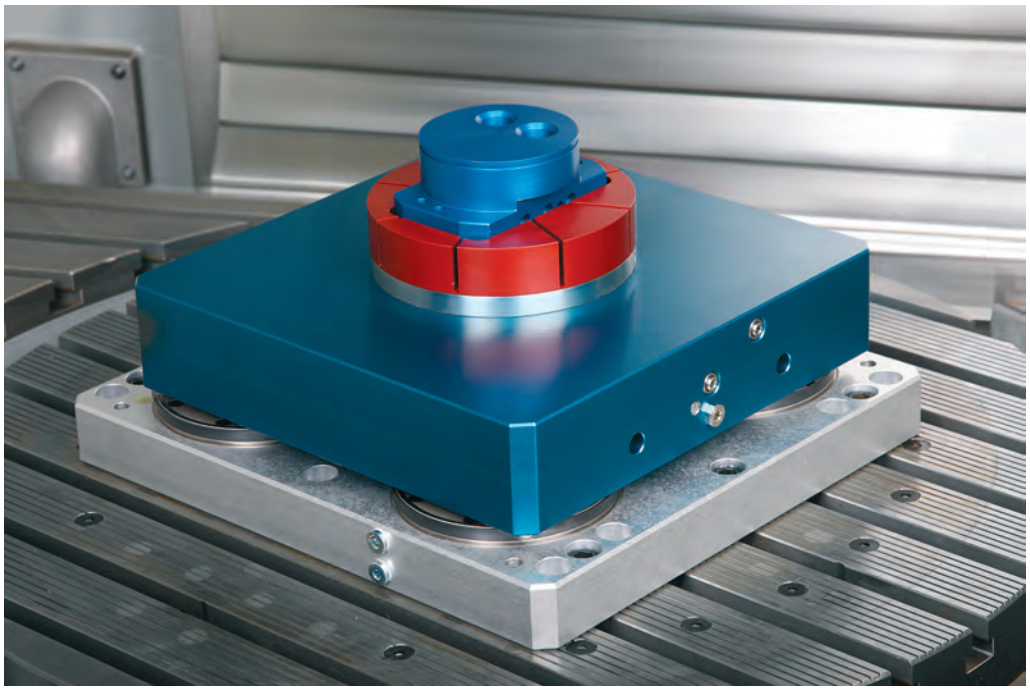

# 5-axis compact clamping system

## Function

We are setting standards with the new „KIPP 5-axis compact clamping system“ in this field. The system was specifically designed for the optimal machining of complex workpieces on modern 5-axis machines.

The intelligent clamping technology increases clamping rigidity for the highest cutting and feed forces. The optimal accessibility to the workpiece allows short, standard tooling to be used. Tooling costs are significantly reduced.

1 Positioning unit with jaw plate
2 Clamping element
3 Fine adjustment with knurled screw
4 Clamping screw
5 Extension shafts
6 Base plate

**ADVANTAGES:**

- Very high tractive force
- High stiffness in the system
- Pull-down function of the jaw plates on both sides
- Optimum fine adjustment of the jaw plates on the workpiece
- Increased tool service life
- The workpiece is always centred due to the systematic construction
- Large clamping width, 20 mm to 320 mm, freely extendable
- Clamping depth adjustable from 3 to 20 mm using seating ledges
- Best tool accessibility from all sides
- Easy to clean

# Forces

The new clamping technology ensures force flow separation and workpiece positioning. The intelligent force distribution in the system allows only weak forces to be transferred to the machine table.

## NEW CLAMPING TECHNOLOGY

PATENT PENDING

- Division of force flow and positioning
- Highest clamping force on the workpiece
- Maximum stiffness
- Centric tension

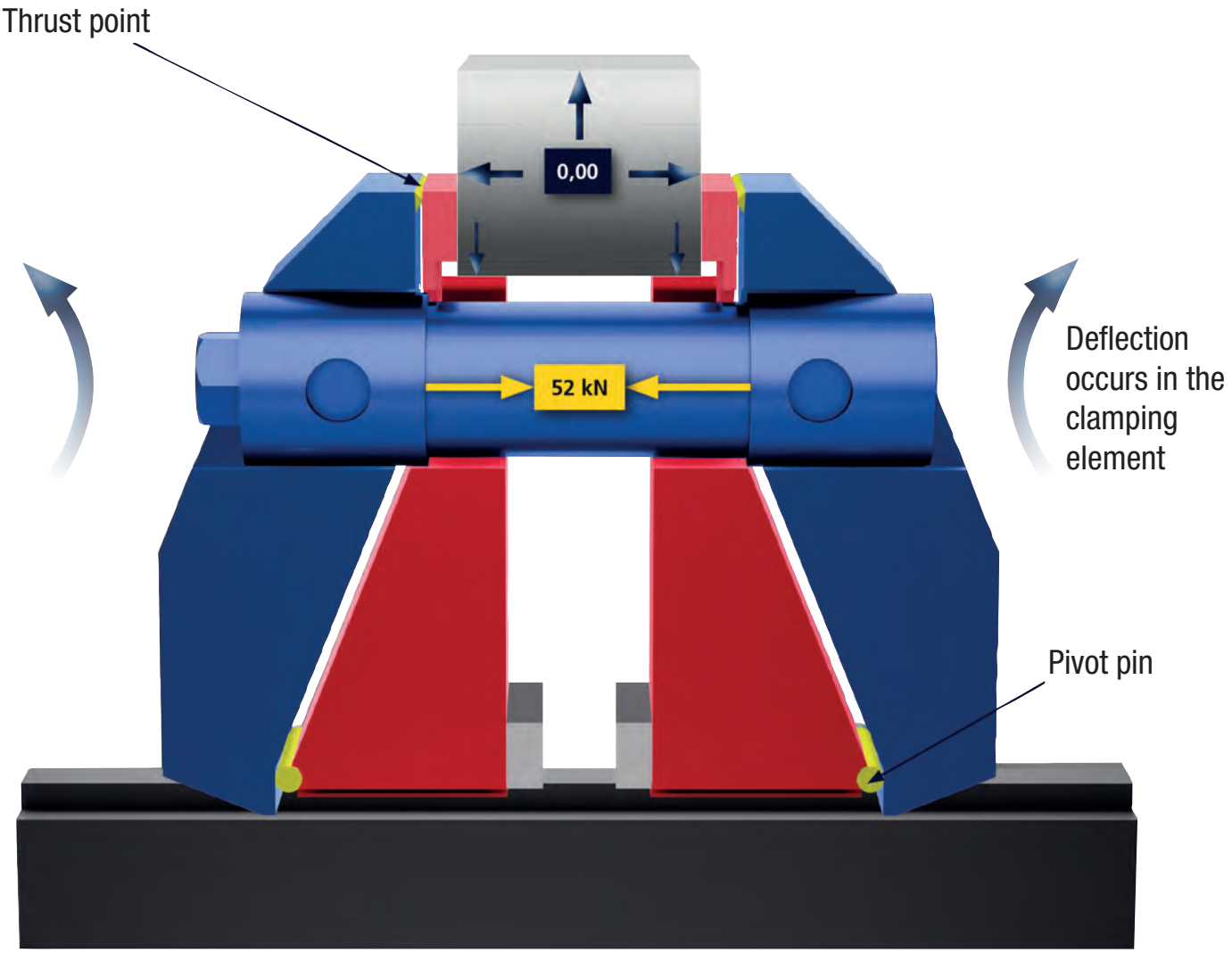


- Clamping elements
- Locators

# Applications

Clamped workpiece using jaw plates with pins. The high tractive force creates a positive clamping situation.

Clamped blank. Sure set-up through positive clamping pins.

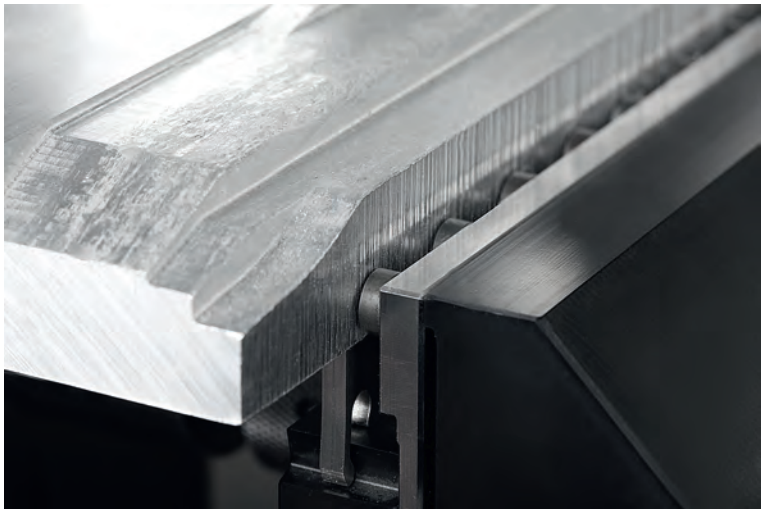

Blank after clamping. Clamping pin imprint is visible on the edge of the workpiece.

With the coupling for cross-clamping, two 5-axis clamping systems can be compactly connected with each other offset by 90 degrees. Setups for workpieces with different dimensions of 4 sides are possible.

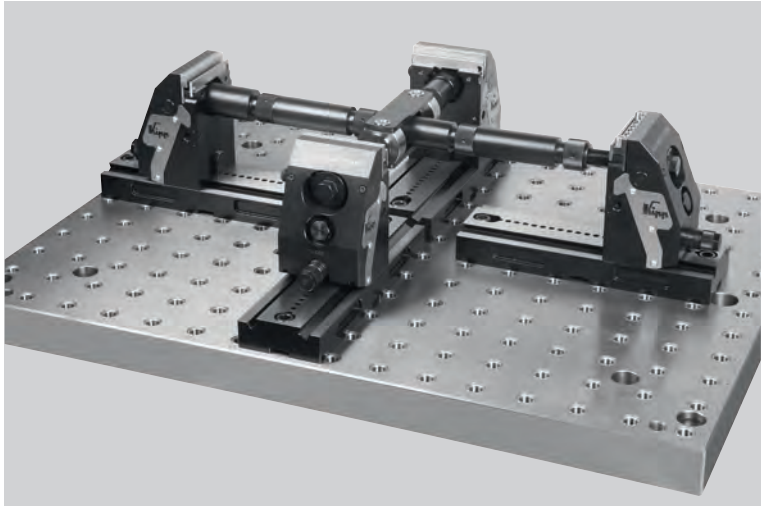

KIPP 5-axis compact clamping system direct on the machine table. Workpiece clamping with smooth jaws.

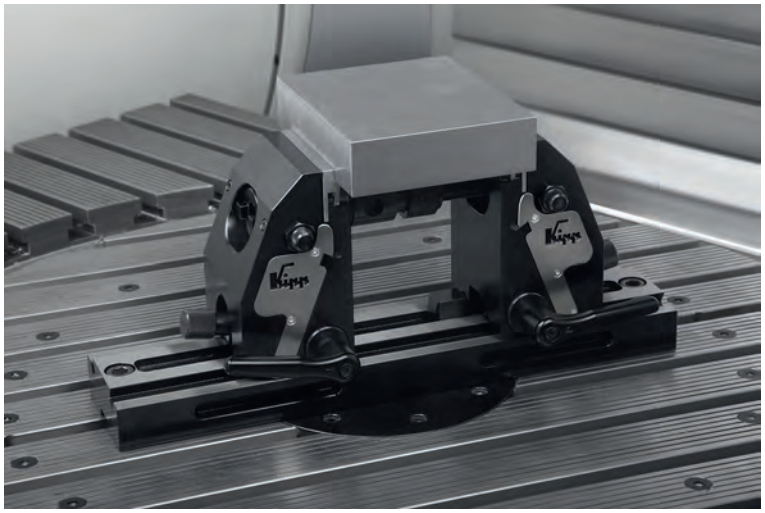

The jaws can be quickly tightened or loosened using the adjustable handles.

When the clamping lever is open, the jaws can be fine adjusted with the knurled knob.

# K0973

# 5-axis clamping system compact

smooth vice jaws

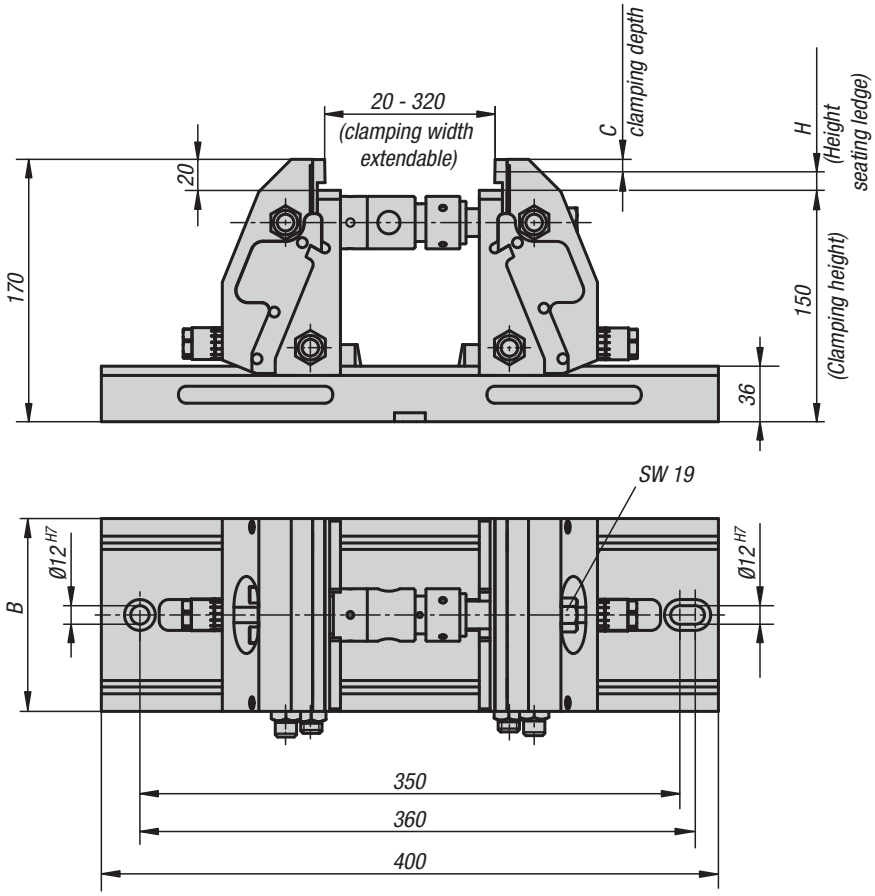


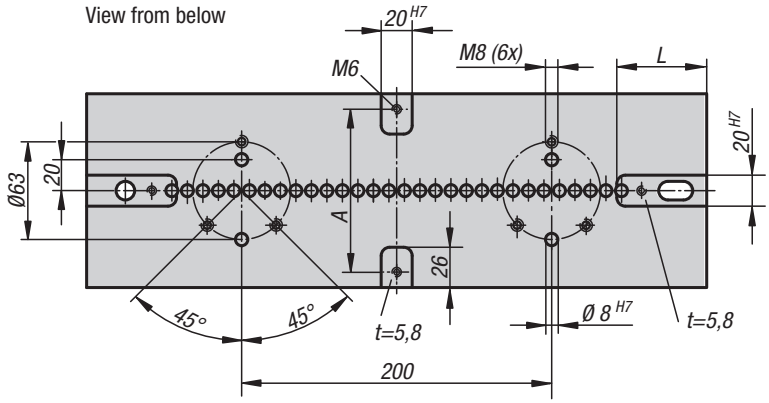


**Material:**
Base plate and jaw hardened steel.Vice jaws tool steel.

**Version:**
Jaws black oxidised.Vice jaws bright.

**Sample order:**
K0973.124000901500

**Note:**
The clamping jaws can be re-adjusted to new workpieces rapidly and securely thanks to ease of use and quick adjustment by means of a scale. The workpiece always centres itself due to the symmetrical structure of the 5-axis clamping system.Short standard tools can be used thanks to optimum accessibility to the workpiece This reduces tooling costs significantly. Clamping widths from 20 mm to 320 mm are possible.

**Assembly:**
The 5-axis compact clamping system can be mounted on T-slot tables, grid systems or, using an adapter flange on conventional zero-point clamping systems.

**Accessories:**
Seating ledge K0974
Vice jaws K0975
Pendulum jaws K0988
Centre jaws K0987
Coupling for cross-clamping K0992

Order the seating ledges and jaw plates with pins separately.

Tractive force 5-axis clamping system compact

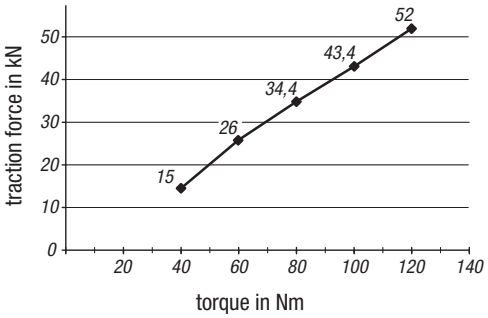


## KIPP 5-axis clamping system compact, smooth vice jaws

| Order No. | A | B | C | H | L | Suitable shoulder screw | Tractive force max. kN |
|---|---|---|---|---|---|---|---|
| **K0973.124000901500** | 70 | 90 | 8/3 | 12/17 | 57,5 | K0815.112055 | 52 |
| **K0973.124001251500** | 105 | 125 | 8/3 | 12/17 | 58 | K0815.112055 | 52 |

# K0994

# Base plates

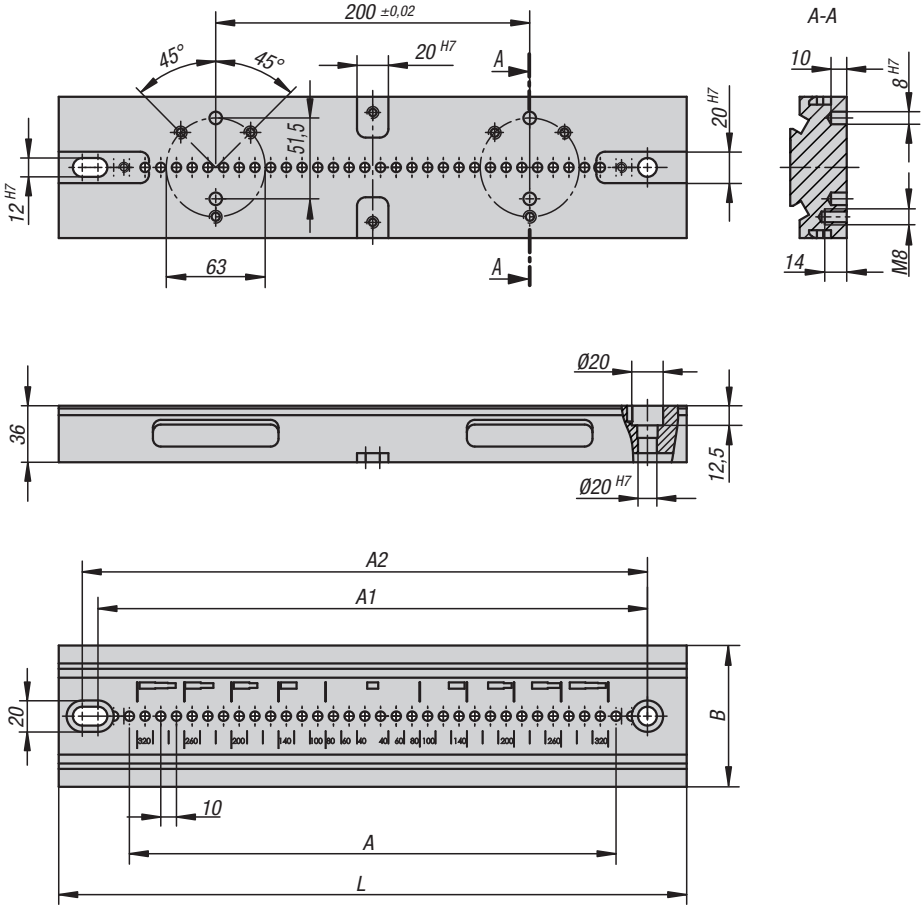


**Material:**
Steel.

**Version:**
Black oxidised.
Functional surfaces ground.

**Sample order:**
K0994.090280

**Note:**
Base plates with locating slots on the underside for easy alignment of the plate on the machine table.
Securing via grid holes 12F7 for 40 mm and 50 mm grid spacing possible.
Lateral recesses provided for separate clamping means.

## KIPP Base plates

| Order No. | A | A1 | A2 | B | L | Suitable shoulder screw | Approx. weight kg |
|---|---|---|---|---|---|---|---|
| **K0994.090280** | 20x10 | 240 | 250 | 90 | 280 | K0815.12055 | 5,601 |
| **K0994.125280** | 20x10 | 240 | 250 | 125 | 280 | K0815.12055 | 8,945 |
| **K0994.090400** | 31x10 | 350 | 360 | 90 | 400 | K0815.12055 | 8,064 |
| **K0994.125400** | 31x10 | 350 | 360 | 125 | 400 | K0815.12055 | 11,965 |

KIRÁLY TRADING KFT H-1151 Budapest Mogyoród útja 12 - 14 tel: 061307-3801 Email:pzoli@kiralytrading.hu

# Vice jaw, complete

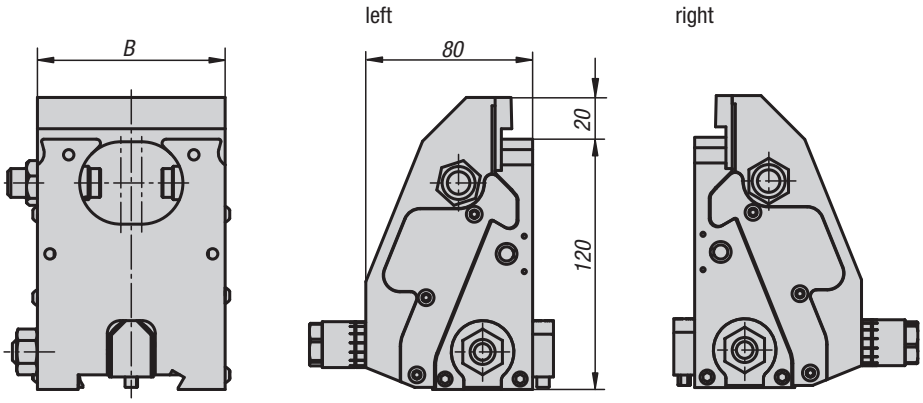


**Material:**
Jaws mild steel.
Jaw plates tool steel.

**Version:**
Jaws black oxidised.Vice jaws bright.

**Sample order:**
K0976.09015010

**Note:**
Complete vice jaws are for expanding the compact 5-axis clamping system.
With the complete vice jaws large workpieces can be implemented in cross clamping allowing holding on four sides. Base plates, extension shafts and the coupling for cross-clamping are also needed for this set up.

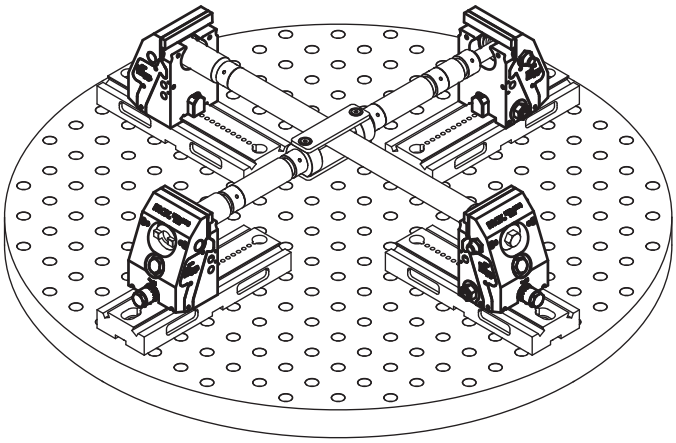

## KIPP Vice jaw, complete

| Order No. | Version | B | Approx. weight kg |
|---|---|---|---|
| **K0976.09015010** | right | 90 | 5,40 |
| **K0976.09015020** | left | 90 | 5,40 |
| **K0976.12515010** | right | 125 | 6,90 |
| **K0976.12515020** | left | 125 | 6,90 |

# K0975

## Jaw plates smooth

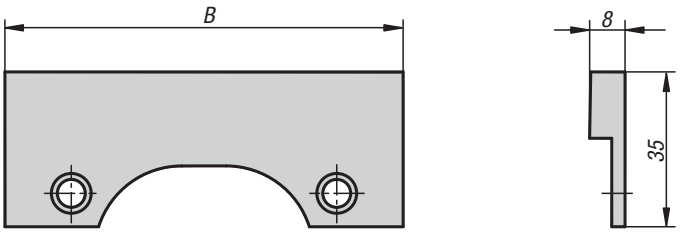

**Material:**
Tool steel.

**Version:**
Hardened, bright.

**Sample order:**
K0975.0900

**Note:**
For clamping pre-machined workpieces and for final machining.

Supplied singly.

### KIPP Jaw plates smooth

| Order No. | B | Approx. weight kg |
|---|---|---|
| **K0975.0900** | 90 | 0,113 |
| **K0975.1250** | 125 | 0,156 |

# K0975

## Jaw plates with pins

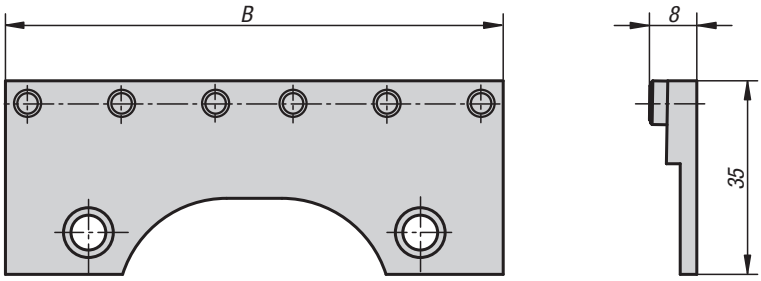

**Material:**
Tool steel.

**Version:**
Jaw hardened, bright.
Pins hardened, black oxidised.

**Sample order:**
K0975.0901

**Note:**
For form-fit clamping without preliminary shaping, e.g. rough pieces, rough machining, castings etc.

Supplied singly

### KIPP Jaw plates with pins

| Order No. | B | No. off pins | Approx. weight kg |
|---|---|---|---|
| **K0975.0901** | 90 | 6 | 0,127 |
| **K0975.1251** | 125 | 8 | 0,175 |

KIRÁLY TRADING KFT H-1151 Budapest Mogyoród útja 12 - 14 tel: 061307-3801 Email:pzoli@kiralytrading.hu

# Pendulum jaws

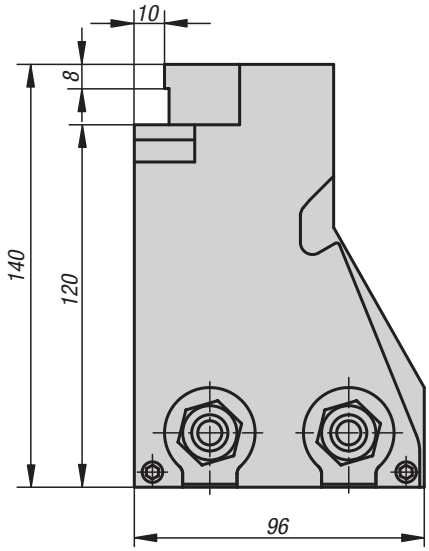


**Material:**
Body mild steel.
Jaw plates tool steel.

**Version:**
Body black oxidised.Vice jaws hardened, bright.

**Sample order:**
K0988.09015010

**Note:**
Pendulum jaws are used to hold oblique workpieces.
The jaw plates of the pendulum jaws can be swivelled by ± 4°.
Pendulum jaws can also be used as fixed jaws.
Rigid design with 2 fastening screws.

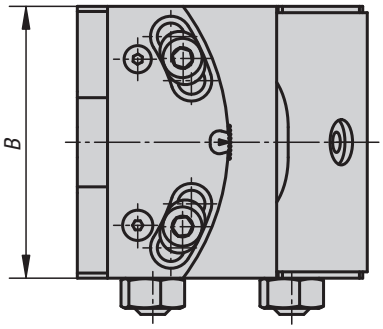


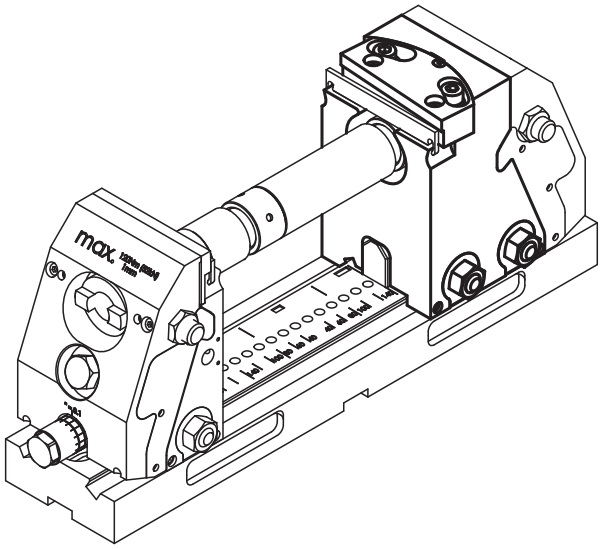


## KIPP Pendulum jaws

| Order No. | B | Approx. weight kg |
|---|---|---|
| **K0988.09015010** | 90 | 6,45 |
| **K0988.12515010** | 125 | 7,9 |

K1001

# Jaw plate smooth

for pendulum jaws

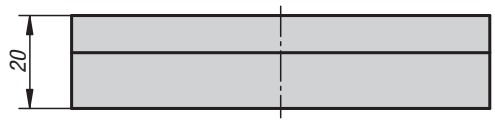


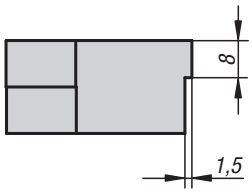

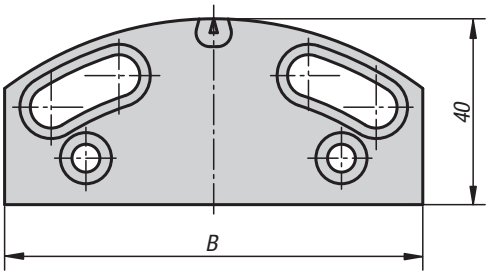


**Material:**
Tool steel.

**Version:**
Hardened, bright.

**Sample order:**
K1001.0900

**Note:**
For clamping pre-machined and ground workpieces.

Supplied singly.

### KIPP Jaw plates smooth for pendulum jaws

| Order No. | B | Approx. weight kg |
|---|---|---|
| **K1001.0900** | 90 | 0,35 |
| **K1001.1250** | 125 | 0,45 |

K1001

# Jaw plates with pins

for pendulum jaws

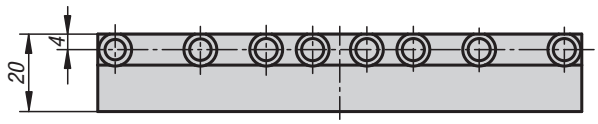


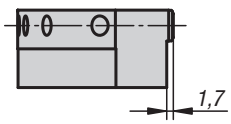

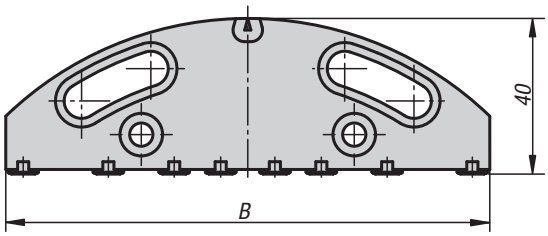


**Material:**
Tool steel.

**Version:**
Vice jaw hardened, bright.
Pins hardened, black oxidised.

**Sample order:**
K1001.0901

**Note:**
For form-fit clamping without preliminary shaping, e.g. blanks, rough machining, castings.

Supplied singly

### KIPP Jaw plates with pins for pendulum jaws

| Order No. | B | No. off pins | Approx. weight kg |
|---|---|---|---|
| **K1001.0901** | 90 | 6 | 0,41 |
| **K1001.1251** | 125 | 8 | 0,51 |

KIRÁLY TRADING KFT H-1151 Budapest Mogyoród útja 12 - 14 tel: 061307-3801 Email:pzoli@kiralytrading.hu

# Centre jaw

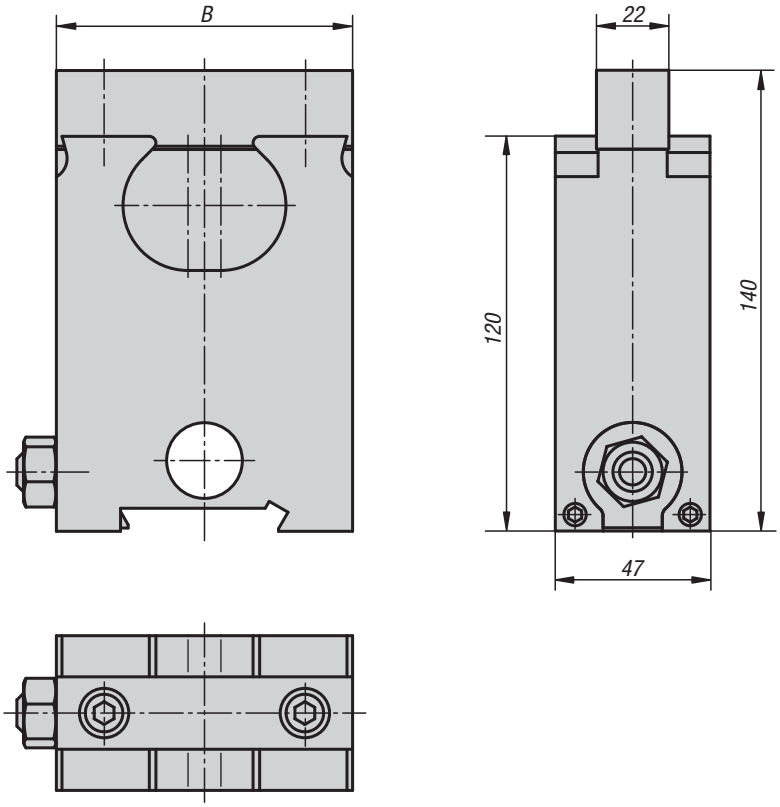


**Material:**
Body mild steel.
Jaw plates tool steel.

**Version:**
Body black oxidised.Vice jaws hardened, bright.

**Sample order:**
K0987.0901500

**Note:**
Centre jaws are used to clamp 2 workpieces simultaneously.
The centre jaws can be displaced according to the measurements of the workpiece sizes. This means that 2 different workpiece sizes can be clamped.

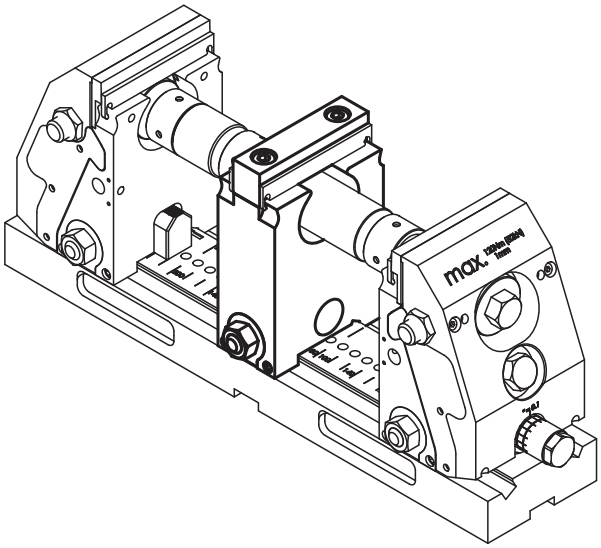


## KIPP Centre jaw

| Order No. | B | Approx. weight kg |
|---|---|---|
| **K0987.0901500** | 90 | 0,46 |
| **K0987.1251500** | 125 | 0,68 |

K1002

# Jaw plate smooth

for centre jaw

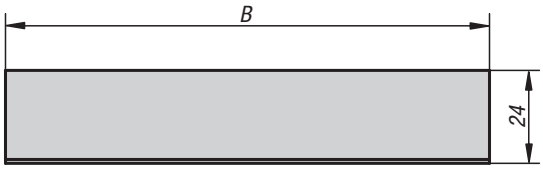


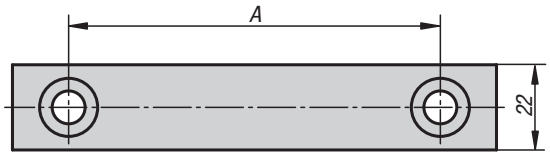

**Material:**
Tool steel.

**Version:**
Hardened, bright.

**Sample order:**
K1002.0900

**Note:**
For clamping pre-machined and ground workpieces.

Supplied singly.

### KIPP Jaw plates smooth for centre jaws

| Order No. | A | B | Approx. weight kg |
|---|---|---|---|
| **K1002.0900** | 61 | 90 | 0,043 |
| **K1002.1250** | 96 | 125 | 0,061 |

K1002

# Jaw plates with pins

for centre jaw

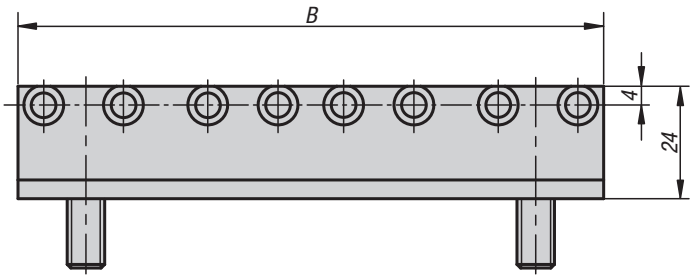


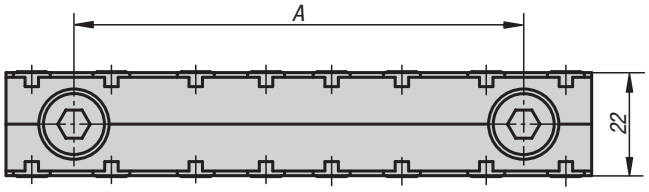

**Material:**
Tool steel.

**Version:**
Vice jaw hardened, bright.
Pins hardened, black oxidised.

**Sample order:**
K1002.0901

**Note:**
For form-fit clamping without preliminary shaping, e.g. blanks, rough machining, castings.

Supplied singly

### KIPP Jaw plates with pins for centre jaws

| Order No. | A | B | No. off pins | Approx. weight kg |
|---|---|---|---|---|
| **K1002.0901** | 61 | 90 | 6 | 0,055 |
| **K1002.1251** | 96 | 125 | 8 | 0,076 |

# K0974

## Seating ledges

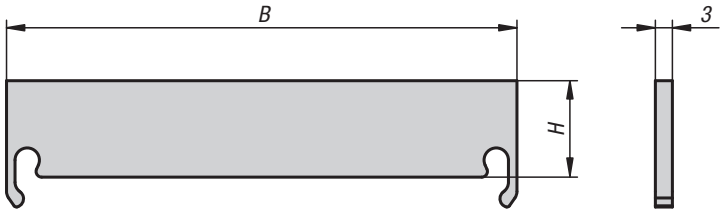

**Material:**
Hardened steel

**Version:**
Bright.

**Sample order:**
K0974.0900312

**Note:**
The seating ledges are suitable for adjusting the clamping depth of the workpiece on the compact 5-axis-clamping-system.
The 12 mm seating ledge exerts a positive down force on the workpiece.
The positive down force of the 17 mm seating ledge causes less edge deformation.

Supplied in pairs.

### KIPP Seating ledges

| Order No. | B | H | Suitable for<br>-<br>- | Approx. weight kg |
|---|---|---|---|---|
| **K0974.0900312** | 90 | 12 | K0973 | 0,029 |
| **K0974.0900317** | 90 | 17 | K0973 | 0,034 |
| **K0974.1250312** | 125 | 12 | K0973 | 0,043 |
| **K0974.1250317** | 125 | 17 | K0973 | 0,048 |

# K0946

## Jaw pins

flattened

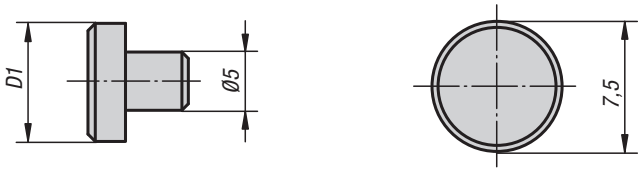


cup point

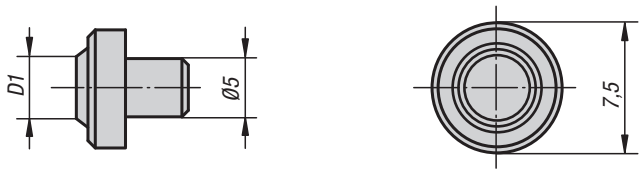

**Material, version:**
Tool steel, hardened.

**Sample order:**
K0946.05600

**Note:**
Assemble by pressing in.
Suitable for vice jaws.

### KIPP Jaw pins

| Order No. | Version | D1 | Application |
|---|---|---|---|
| **K0946.05000** | flattened | 7,5 | material over 1000 N/mm² tensile strength |
| **K0946.05400** | cup point | 4 | material up to ca. 1000 N/mm² tensile strength |
| **K0946.05600** | cup point | 6 | material up to ca. 1000 N/mm² tensile strength |

KIRÁLY TRADING KFT H-1151 Budapest Mogyoród útja 12 - 14 tel: 061307-3801 Email:pzoli@kiralytrading.hu

# Cylinder clamping set

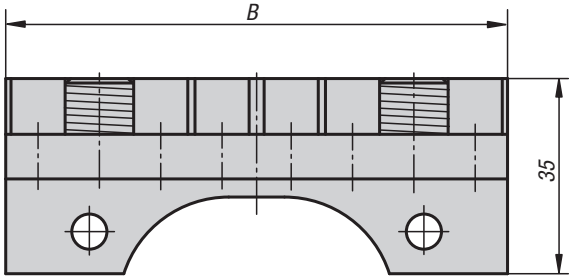


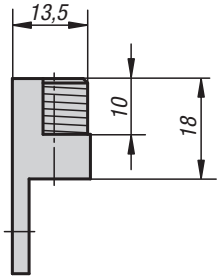


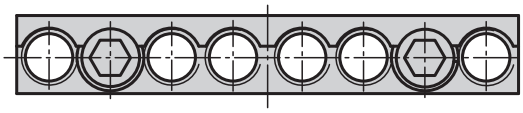

**Material:**
Tool steel.

**Version:**
Vice jaw hardened, bright.
Pins hardened, black oxidised.

**Sample order:**
K0989.09035

**Note:**
For holding round workpieces.

Supplied in pairs.

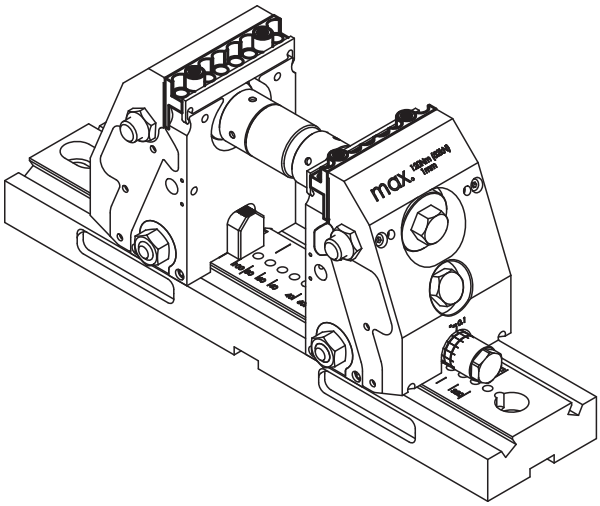


## KIPP Cylinder clamping set

| Order No. | B | Clamping range min. - max. | Approx. weight kg |
|---|---|---|---|
| **K0989.09035** | 90 | 20 mm - 250 mm | 0,75 |
| **K0989.12535** | 125 | 20 mm - 320 mm | 0,84 |

# K0990

## Extension shafts

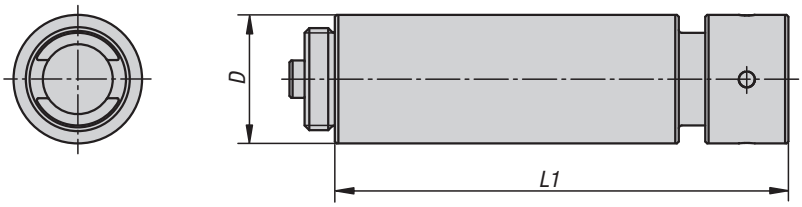

**Material:**
Carbon steel.

**Version:**
Black oxidised.

**Sample order:**
K0990.060

**Note:**
For setting the clamping width.
Supplied with union nut.
The extension shafts can be combined as required.

### KIPP Extension shafts

| Order No. | D | L1 |
|---|---|---|
| K0990.060 | 34 | 60 |
| K0990.120 | 34 | 120 |
| K0990.240 | 34 | 240 |
| K0990.480 | 34 | 480 |

# K0991

## Adapter shaft

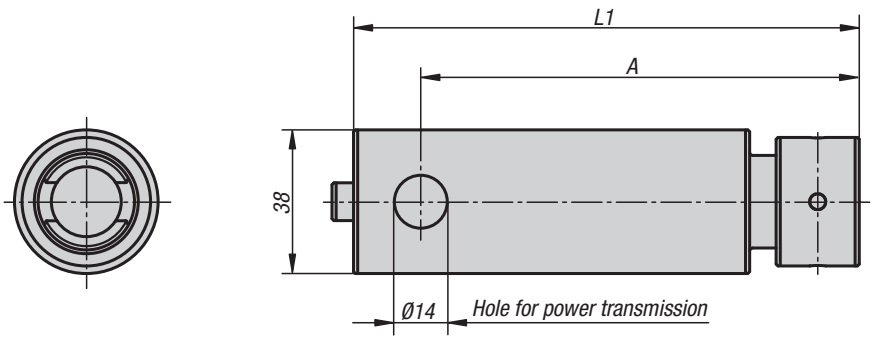

**Material:**
Carbon steel.

**Version:**
Black oxidised.

**Sample order:**
K0991.060

**Note:**
For setting the clamping width.
Supplied with union nut.
The adapter shafts are linked to the vice jaws by the lateral holes.
An adapter shaft must be mounted in every compact 5-axis clamp.

### KIPP Adapter shaft

| Order No. | A | L1 |
|---|---|---|
| K0991.060 | 56 | 74 |
| K0991.120 | 116 | 134 |

KIRÁLY TRADING KFT H-1151 Budapest Mogyoród útja 12 - 14 tel: 061307-3801 Email:pzoli@kiralytrading.hu

# Coupling

for cross-clamping

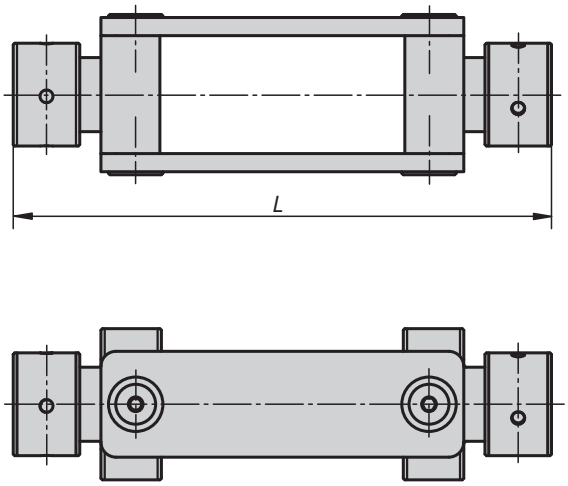


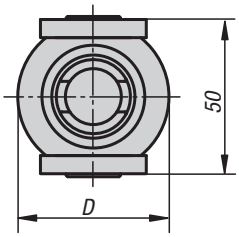


**Material:**
Carbon steel.

**Version:**
Black oxidised.

**Sample order:**
K0992.178

**Note:**
Two 5-axis clamping systems can be connected using a coupling for cross-clamping, allowing a workpiece to be held on four sides.

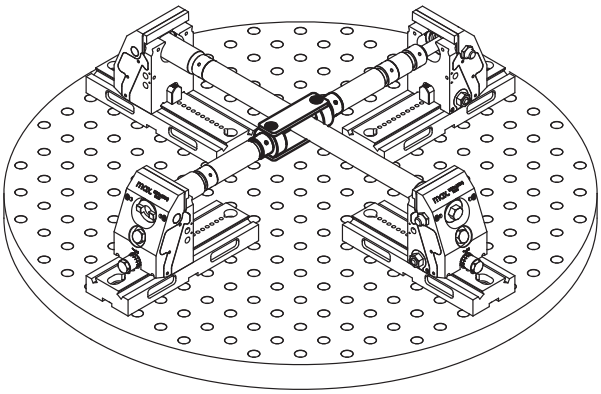

## KIPP Coupling for cross-clamping

| Order No. | D | L | Approx. weight kg |
|---|---|---|---|
| **K0992.178** | 50 | 178 | 3,55 |

K0993

# Stop set

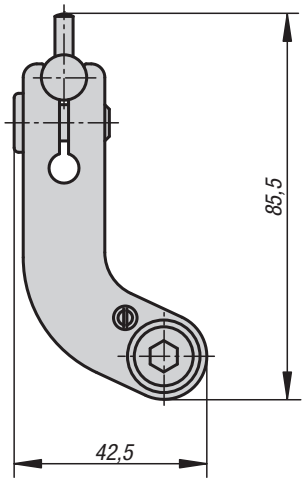


**Material:**
Steel.

**Version:**
Swivel arm, black oxidised.
Stop pin bright.

**Sample order:**
K0993.150

**Note:**
Stop set for direct fastening to jaws.The stop can be swivelled aside for machining the workpiece without losing the stop dimension.

Supplied complete with attachment parts.

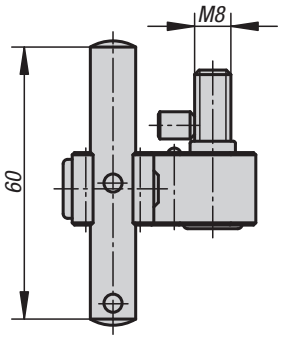


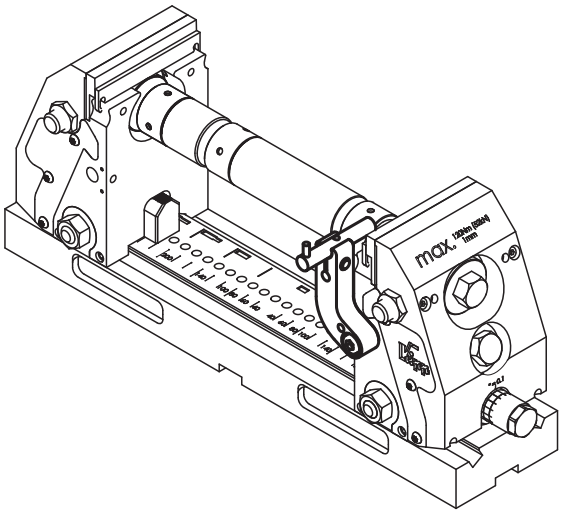


## KIPP Stop set

| Order No. | Suitable for | Approx. weight kg |
|---|---|---|
| **K0993.150** | 5 Axis clamping system | 0,175 |

KIRÁLY TRADING KFT H-1151 Budapest Mogyoród útja 12 - 14 tel: 061307-3801 Email:pzoli@kiralytrading.hu

# Clamping claw set

K1008.0012
K1008.0016

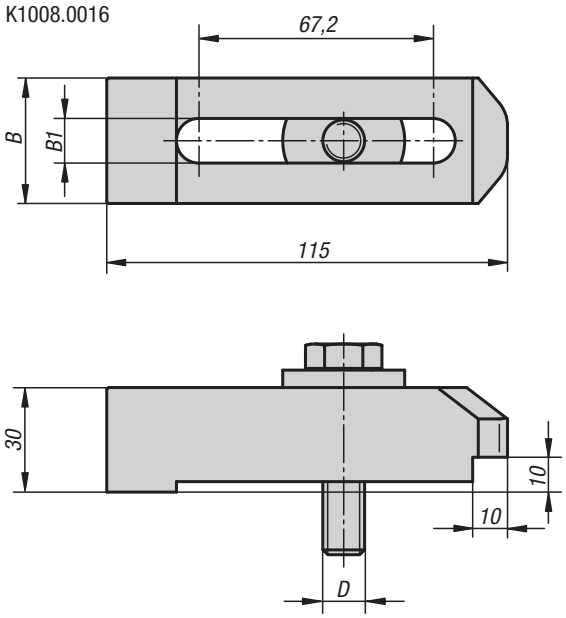

**Material:**
Carbon steel.

**Version:**
Black oxidised.

**Sample order:**
K1008.0012

**Note:**
Clamping claw set for compact 5-axis clamping system.
All common T-slots, grid and fastening hole spacings can be covered.

K1008.1412
K1008.1816

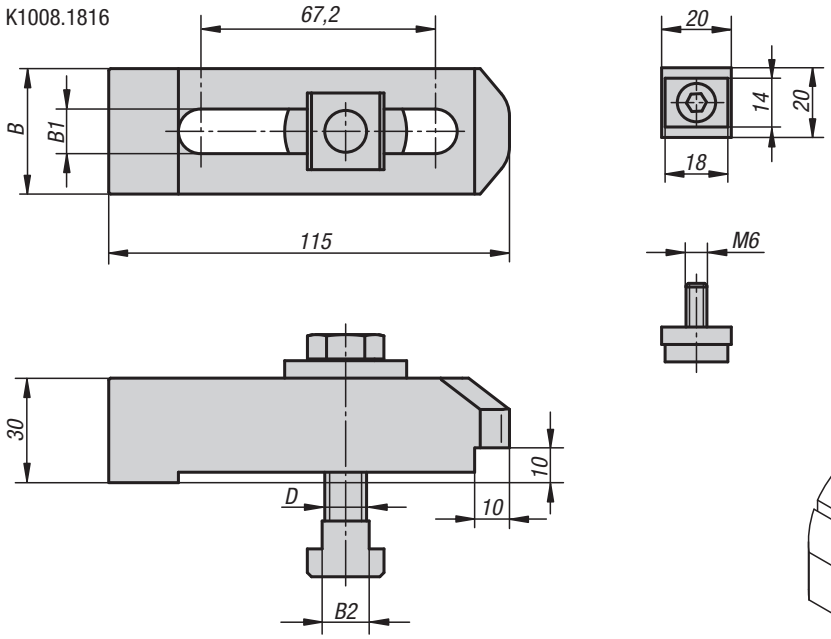


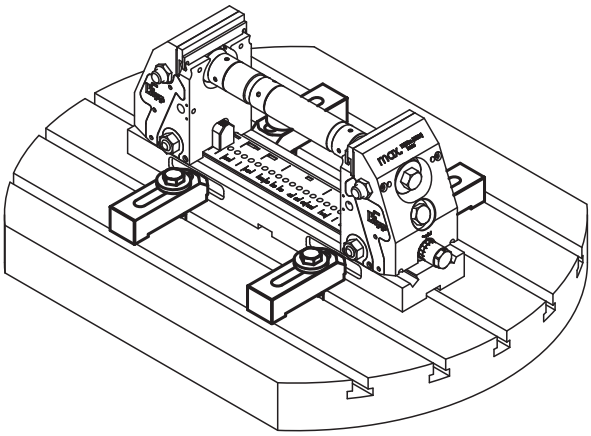

## KIPP Clamping claw set

| Order No. | B | B1 | B2 | D | Approx. weight kg |
|---|---|---|---|---|---|
| **K1008.0012** | 36 | 12,8 | - | M12 | 4 |
| **K1008.0016** | 40 | 16,8 | - | M16 | 4,5 |
| **K1008.1412** | 36 | 12,8 | 13,5 | M12 | 4,2 |
| **K1008.1816** | 40 | 16,8 | 17,5 | M16 | 4,6 |

# 5 Axis Clamping System

## Trend-setting clamping concept for 5-sided machining

**The 5-axis clamping system complements modern milling centres to produce an unbeatable overall concept.**
Many products are becoming more complicated than ever, and also have to be produced in an extremely short time and with maximum precision. To satisfy these criteria workpieces must more often be completely machined in one set-up. Modern manufacturing technology adopted by machine tool manufacturers is the developement of 5-axis machining. Complete machining of workpieces on 5-axis centres transfers the entire high precision to the workpiece.

Due the greater configuration options for workpieces provided by 5-axis machining, a high-performance clamping system is an essential precondition for the efficient use of these machines. Among other things, an optimised clamping system helps guarantee that the machine‘s complex travel can produce a high-precision workpiece.

The 5-axis clamping systems allow machining free of interfering edges and vibration, with extremely high cutting and feed forces. They enable the application of extremely short tools in order to guarantee the required tolerances and surfaces.

## 5 Axis clamping system for trouble-free 5-sided machining in a single clamping

- Can be set up on grid hole plates, on T-slot plates and on your own fixtures
- Clamping force up to 42 kN by installing a tension spindle immediately under the workpiece
- Clamping width 22 - 236 mm, can be extended as desired using extension shafts
- Clamps rough pieces, round and irregular parts
- Positive-fit clamping without pre-embossing
- Various clamping heights (see illustration)
- Low clamping depth of 8 mm

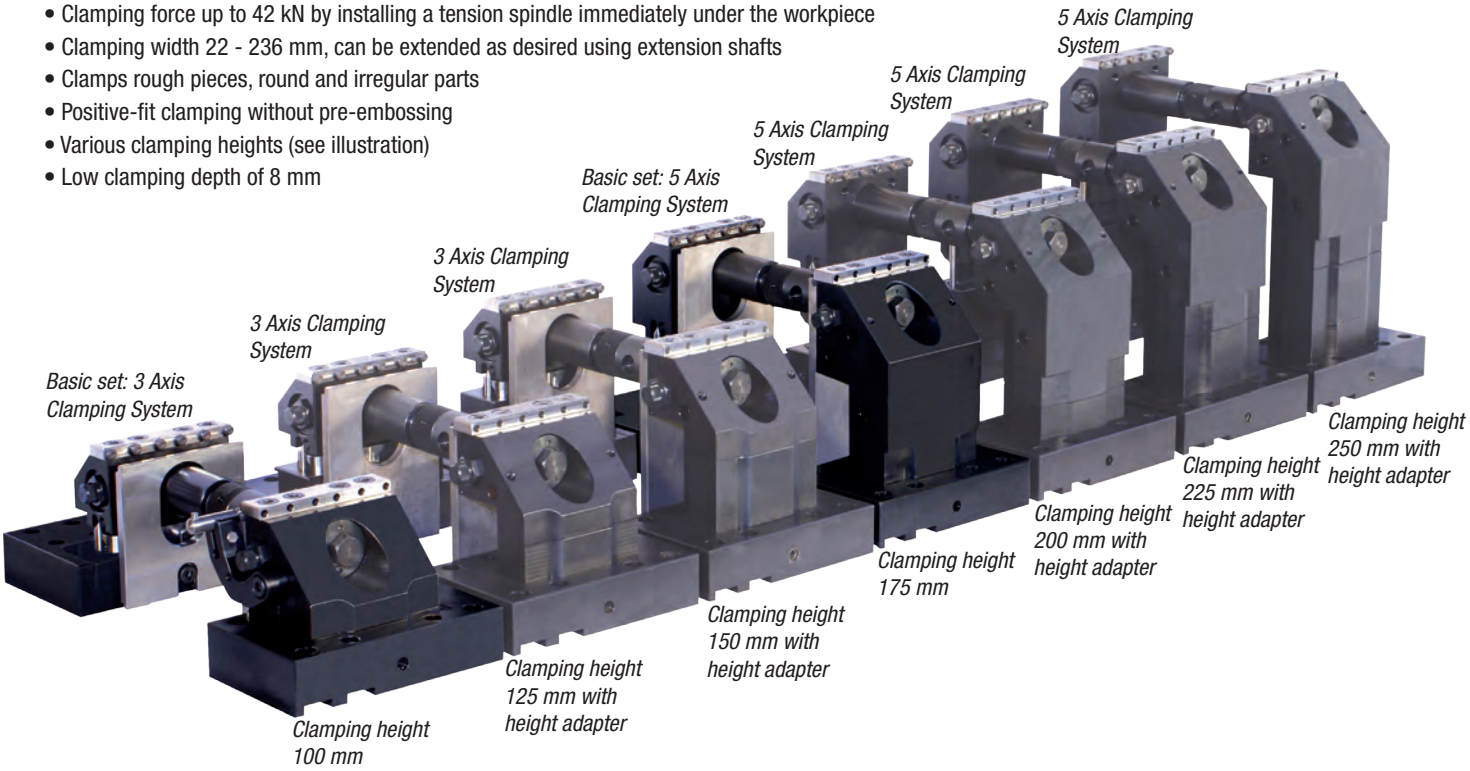

# 5 Axis Clamping System

## Special technical features - clamping process

before clamping

The clamping process involves the penetration of hardened, exchangeable clamping pins in to the workpiece. This guarantees positive-fit clamping without pre-embossing. Optionally, flattened clamping pins are available for clamping workpieces with sensitive surfaces. Additional flexible applications are possible using accessories, including clamping jaws for specific clamping tasks and round clamping elements for clamping round parts.

The 5 axis clamping systems provides you with a universal clamping element that is able to clamp workpieces with a clamping width of 22 - 236 mm. The clamping width can be extended as desired through the use of extension shafts.

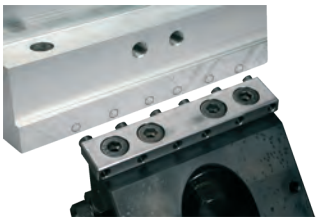

after clamping

## High clamping forces up to 42 kN that are not lost due to bending

By installing a tension spindle directly under the workpiece support the clamping force is generated where it is required.

- no widening the jaws under load
- no distortion of the machine table
- extreme rigidity allows highest cutting forces

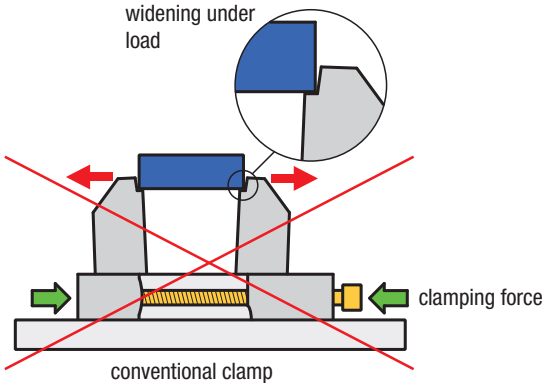


conventional clamp

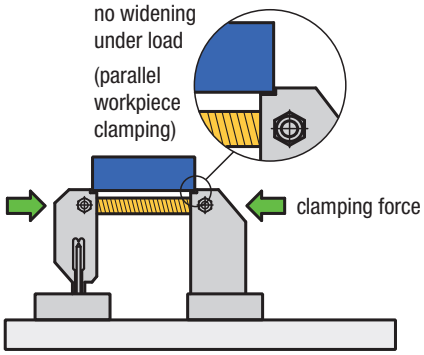


5 axis clamping system

## 5 Axis Clamping System - system structure

| pos. | description | pcs. |
|---|---|---|
| 1 | fixed jaws | 1 |
| 2 | moveable jaws | 1 |
| 3 | base plate for fixed jaws | 1 |
| 4 | base plate for movable jaws | 1 |
| 5 | clamping jaw, standard, with socket head screw (5.1) | 2 |
| 6 | clamping pin | 12 |
| 7 | threaded spindle (7) with tension housing (7.1) | 1 |
| 8 | spindle nut | 1 |
| 9 | extension shaft (9) with union nut (9.1) | 1 |
| 10 | fastening screw | 4 |
| 11 | support guide | 2 |
| 12 | socket head screw DIN 6912M 8x14 | 2 |
| 13 | pointer | 1 |
| 14 | grub screw DIN 913 M8x8 | 1 |
| 15 | socket head screw DIN 912 M12x20 | 2 |
| 16 | socket head screw DIN 912 M12x40 | 3 |
| 17 | cylindrical pin DIN 7979 8x20 | 2 |

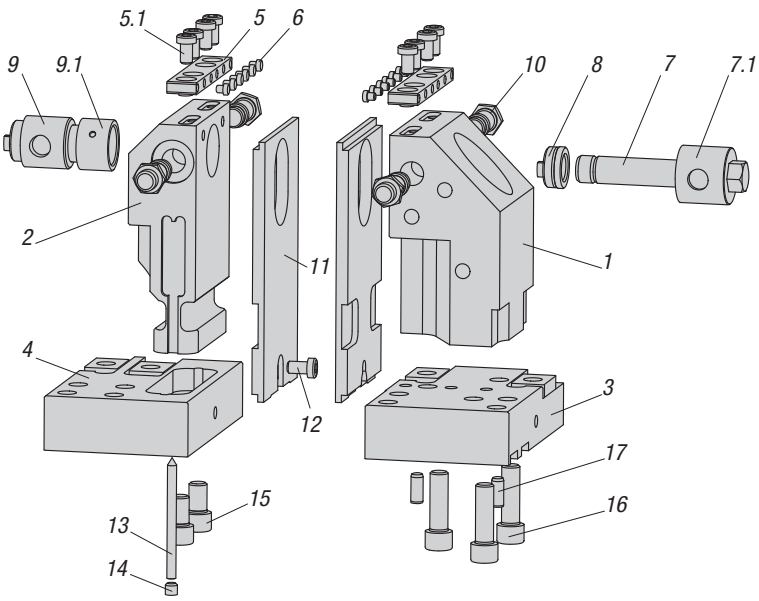

K0939

# 3 Axis clamping system

for grid plates

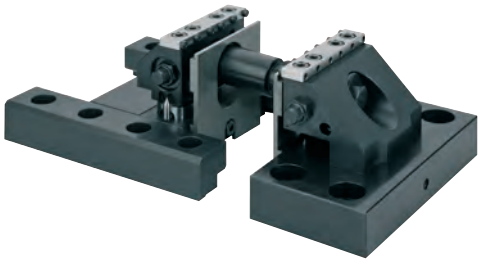

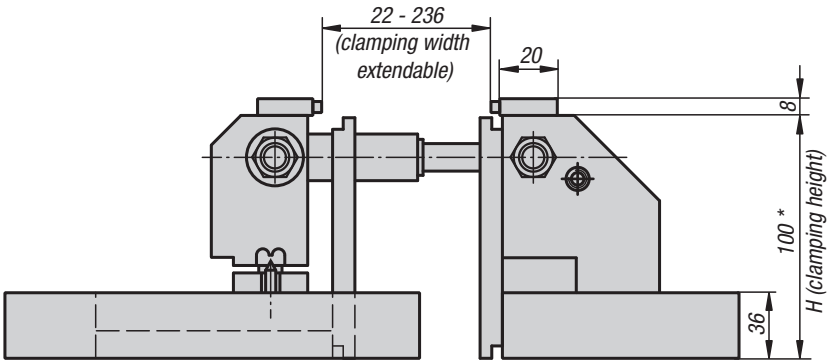


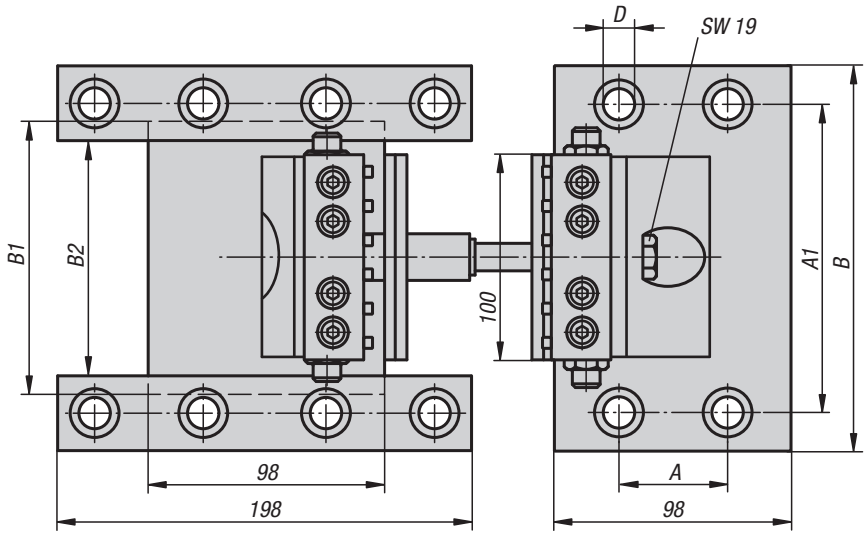


**Material:**
Base plates and jaws of case-hardened steel.
Support guides of steel.
Clamping jaws of special steel.
Clamping pin of tool steel.

**Version:**
Base plates and jaws black oxidised.
Support guides hardened, bright.
Jaws bright.
Clamping pin hardened, bright.

**Sample order:**
K0939.4012100

**Note:**
3 axis clamping system for mounting on grid plates. The clamping system enables 3-sided machining free of interfering edges with a clamping depth of only 8 mm. With this clamping system, clamping widths of 22 - 236 mm are possible, and can be extended as desired using the optionally available K0947 extension shafts.
By installing a tension spindle immediately under the workpiece support, a force of up to 22 kN is applied to the workpiece; this is not lost due to bending. The use of clamping pins with a 4 mm cup point allows positive-fit clamping without pre-embossing.
To fasten the clamping system on grid hole plates, K0815 locating bolts are recommended.
The clamping set includes 1 each extension shaft with L = 60 mm and L = 120 mm.

* The clamping height can be extended with the height adapters K0941 and support guides K0942.

**Accessories:**
Stop set K0948
Locating bolts K0815

clamping force 3 axis clamping system

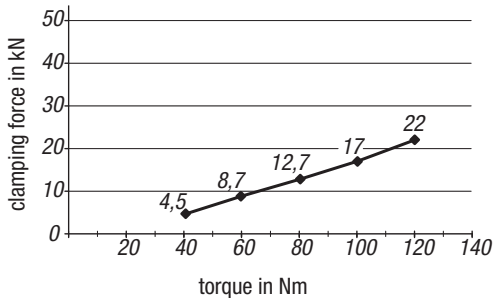


## KIPP 3 Axis clamping system for grid plates

| Order No. | Grid spacing | A | A1 | B | B1 | B2 | D | H | Clamping force max. kN |
|---|---|---|---|---|---|---|---|---|---|
| **K0939.4012100** | 40x40 (M12) | 40 | 160 | 190 | 148 | 124 | 12 | 100 * | 22 |
| **K0939.5012100** | 50x50 (M12) | 50 | 150 | 190 | 138 | 114 | 12 | 100 * | 22 |
| **K0939.5016100** | 50x50 (M16) | 50 | 150 | 190 | 134 | 110 | 16 | 100 * | 22 |

K0939

# 5 Axis clamping system

for grid plates

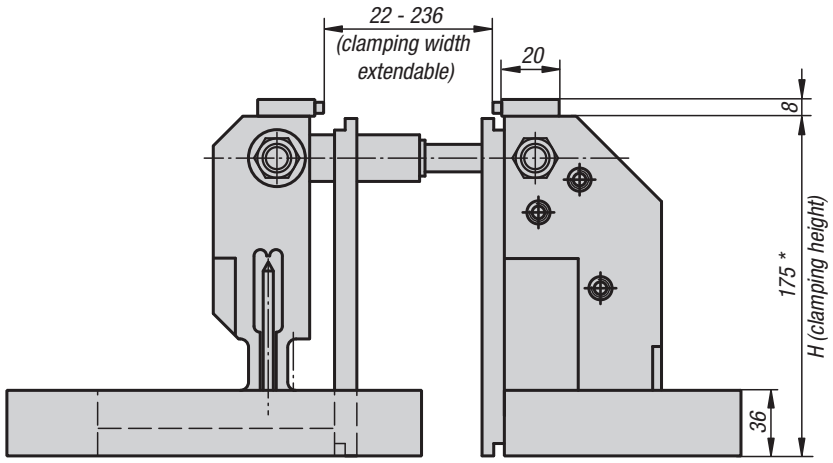


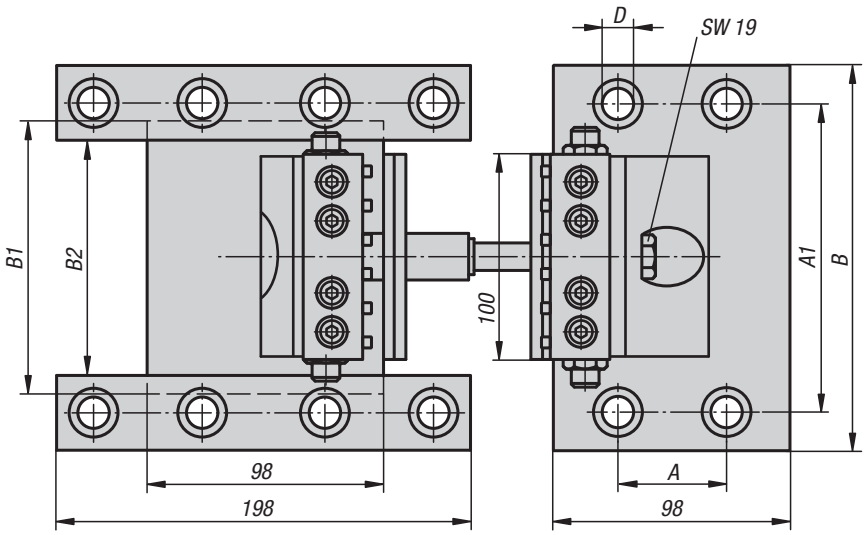


**Material:**
Base plates and jaws of case-hardened steel.
Support guides of steel.
Clamping jaws of special steel.
Clamping pin of tool steel.

**Version:**
Base plates and jaws black oxidised.
Support guides hardened, bright.
Jaws bright.
Clamping pin hardened, bright.

**Sample order:**
K0939.4012175

**Note:**
5 axis clamping system for mounting on grid plates. The clamping system enables 5-sided machining free of interfering edges with a clamping depth of only 8 mm. With this clamping system, clamping widths of 22 - 236 mm are possible, and can be extended as desired using the optionally available K0947 extension shafts.
By installing a tension spindle immediately under the workpiece support, a force of up to 42 kN is applied to the workpiece; this is not lost due to bending. The use of clamping pins with a 4 mm cup point allows positive-fit clamping without pre-embossing.
To fasten the clamping system on grid hole plates, K0815 locating bolts are recommended.
The clamping set includes 1 each extension shaft with L = 60 mm and L = 120 mm.

* The clamping height can be extended with the height adapters K0941 and support guides K0942.

**Accessories:**
Stop set K0948
Locating bolts K0815

clamping force 5 axis clamping system

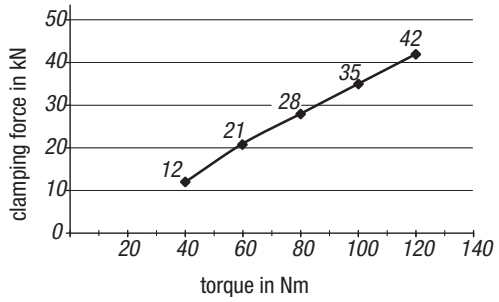


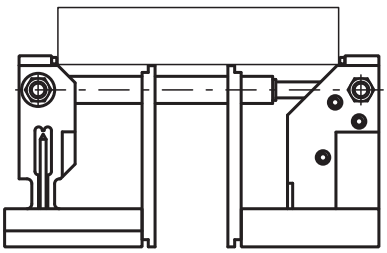

## KIPP 5 Axis clamping system for grid plates

| Order No. | Grid spacing | A | A1 | B | B1 | B2 | D | H | Clamping force max. kN |
|---|---|---|---|---|---|---|---|---|---|
| **K0939.4012175** | 40x40 (M12) | 40 | 160 | 190 | 148 | 124 | 12 | 175 * | 42 |
| **K0939.5012175** | 50x50 (M12) | 50 | 150 | 190 | 138 | 114 | 12 | 175 * | 42 |
| **K0939.5016175** | 50x50 (M16) | 50 | 150 | 190 | 134 | 110 | 16 | 175 * | 42 |

# 3 Axis clamping system

for T-slots

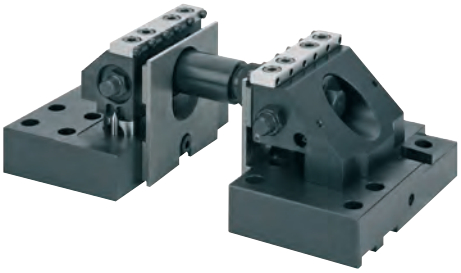

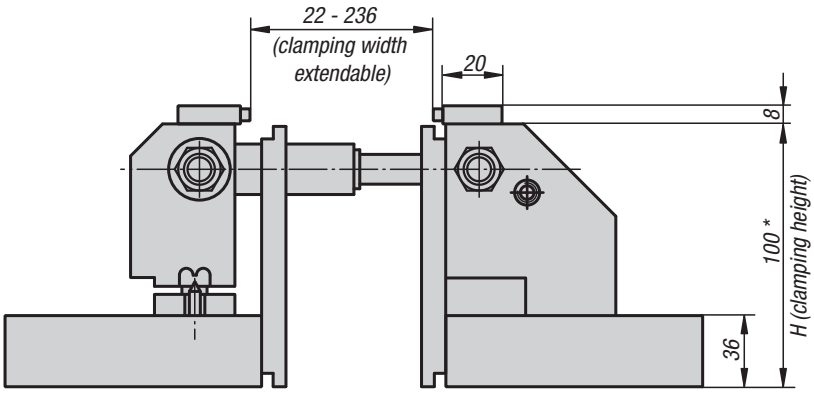


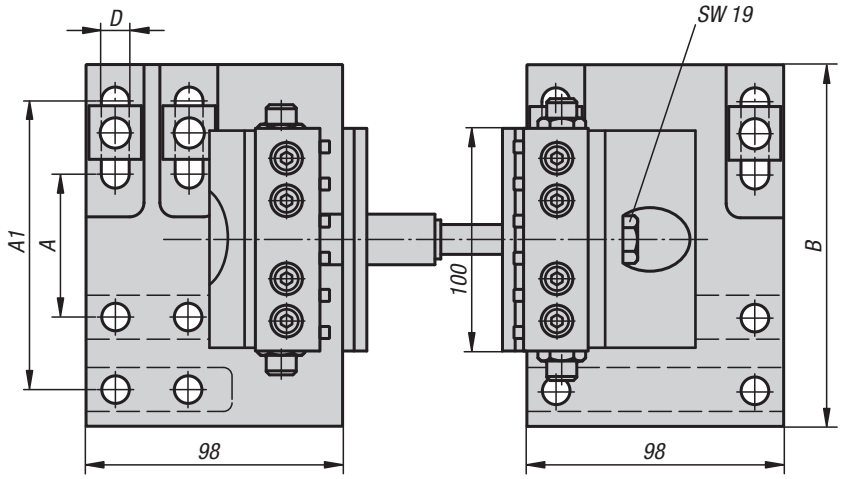


**Material:**
Base plates and jaws of case-hardened steel.
Support guides of steel.
Clamping jaws of special steel.
Clamping pin of tool steel.

**Version:**
Base plates and jaws black oxidised.
Support guides hardened, bright.
Jaws bright.
Clamping pin hardened, bright.

**Sample order:**
K0940.063100

**Note:**
3 axis clamping system of mounting on machine tables with T-slots. The clamping system enables 3-sided machining free of interfering edges with a clamping depth of only 8 mm. With this clamping system, clamping widths of 22 - 236 mm are possible, and can be extended as desired using the optionally available K0947 extension shafts. By installing a tension spindle immediately under the workpiece support, a force of up to 22 kN is applied to the workpiece; this is not lost due to bending. The use of clamping pins with a 4 mm cup point allows positive-fit clamping without pre-embossing. For fastening the clamping system on slotted tables, fixing set K0951 is recommended.
The clamping set includes 1 each extension shaft with L = 60 mm and L = 120 mm.

* The clamping height can be extended with the height adapters K0941 and support guides K0942.

**Accessories:**
Stop set K0948
Fixing set K0951

clamping force 3 axis clamping system

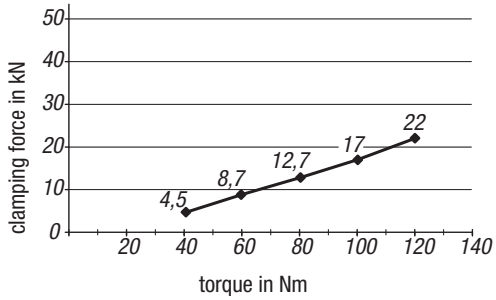


## KIPP 3 Axis clamping system for T-slots

| Order No. | Suitable for | A | A1 | B | D | H | Clamping force max. kN |
|---|---|---|---|---|---|---|---|
| **K0940.063100** | slot spacing 63 - 126 | 63 | 126 | 158 | 12,5 | 100 * | 22 |

KIRÁLY TRADING KFT H-1151 Budapest Mogyoród útja 12 - 14 tel: 061307-3801 Email:pzoli@kiralytrading.hu

# 5 Axis clamping system

for T-slots

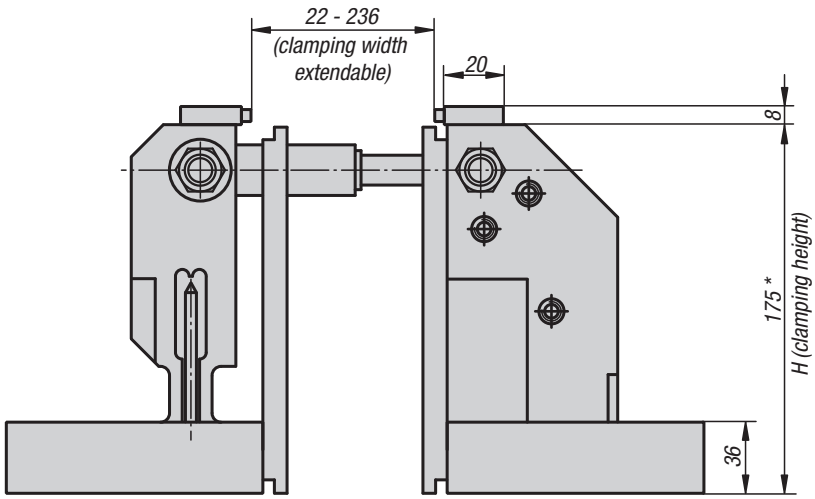


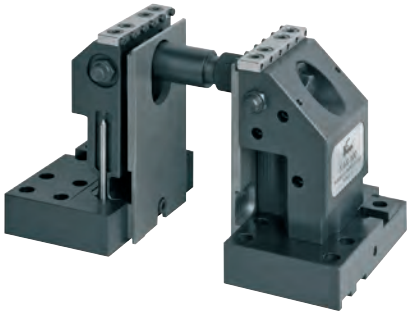

**Material:**
Base plates and jaws of case-hardened steel.
Support guides of steel.
Clamping jaws of special steel.
Clamping pin of tool steel.

**Version:**
Base plates and jaws black oxidised.
Support guides hardened, bright.
Jaws bright.
Clamping pin hardened, bright.

**Sample order:**
K0940.063175

**Note:**
5 axis clamping system for mounting on machine tables with T-slots. The clamping system enables 5-sided machining free of interfering edges with a clamping depth of only 8 mm. With this clamping system, clamping widths of 22 - 236 mm are possible, and can be extended as desired using the optionally available K0947 extension shafts. By installing a tension spindle immediately under the workpiece support, a force of up to 42 kN is applied to the workpiece; this is not lost due to bending. The use of clamping pins with a 4 mm cup point allows positive-fit clamping without pre-embossing.
For fastening the clamping system on slotted tables, fixing set K0951 is recommended.
The clamping set includes 1 each extension shaft with L = 60 mm and L = 120 mm.

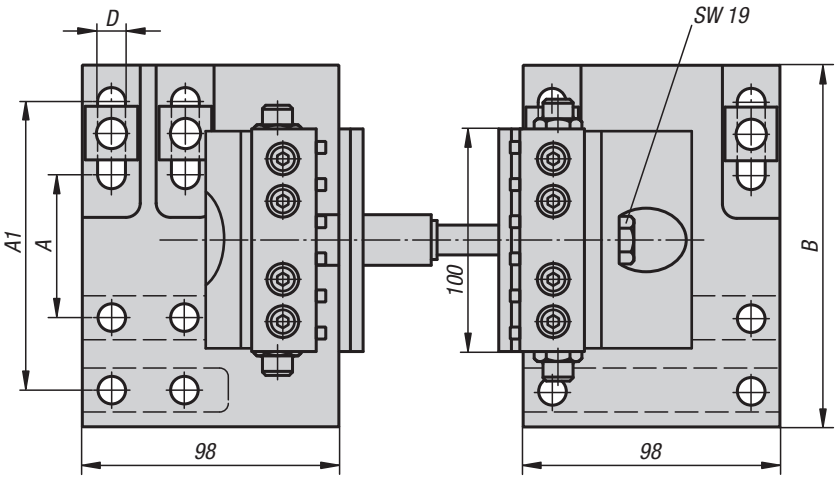


* The clamping height can be extended with the height adapters K0941 and support guides K0942.

**Accessories:**
Stop set K0948
Fixing set K0951

clamping force 5 axis clamping system

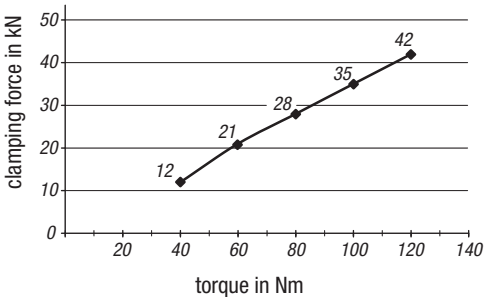


## KIPP 5 Axis clamping system for T-slots

| Order No. | Suitable for | A | A1 | B | D | H | Clamping force max. kN |
|---|---|---|---|---|---|---|---|
| **K0940.063175** | slot spacing 63 - 126 | 63 | 126 | 158 | 12,5 | 175 * | 42 |

KIRÁLY TRADING KFT H-1151 Budapest Mogyoród útja 12 - 14 tel: 061307-3801 Email:pzoli@kiralytrading.hu

# Riser plates

risers for
moveable side

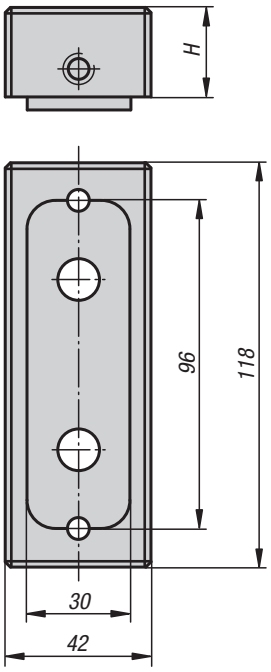


risers for
fixed side

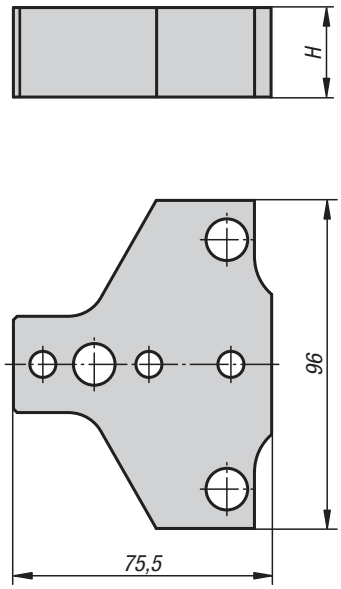


**Material, version:**
Steel, black oxidised.

**Sample order:**
K0941.025
(supplied in pairs)

**Note:**
The riser plates are mounted between the base plate and the jaw body raising the 3 axis clamping system to 125 or 150 mm. The 5 axis clamping system can be raised to 200, 225 or 250 mm. When using the riser plates the matching seating ledges K0942 must also be installed.

Supplied with fastening screws and cylindrical pins.

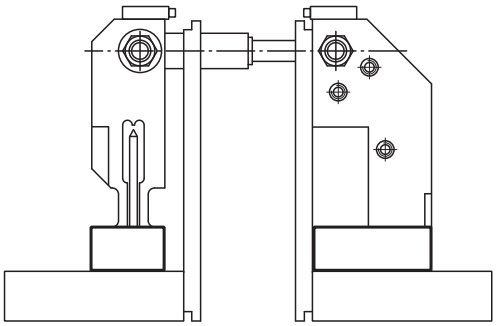

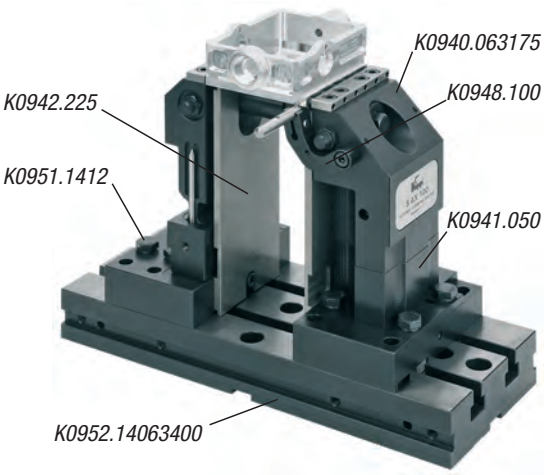


## KIPP Riser plates

| Order No. | H |
|---|---|
| **K0941.025** | 25 |
| **K0941.050** | 50 |
| **K0941.075** | 75 (25 + 50) |

# K0942

# Seating ledges

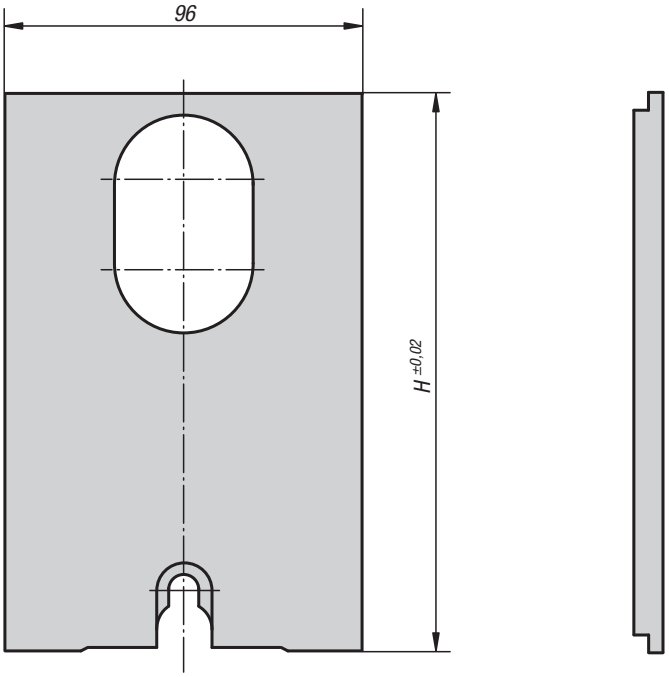


**Material, version:**
Steel hardened, bright.

**Sample order:**
K0942.100
(supplied in pairs)

**Note:**
If the riser plates K0941 are used to raise the height, the seating ledges must be changed to suit.

*Including 12 jaw pins K0946.05600.

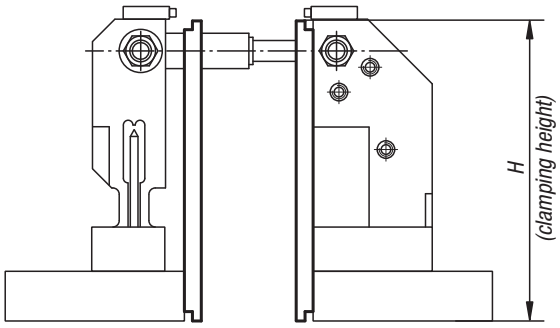


## KIPP Seating ledges

| Order No. | H | Suitable for |
|---|---|---|
| **K0942.100** | 100 | 3 axis system basic set |
| **K0942.105*** | 105 | 3 axis system basic set |
| **K0942.125** | 125 | 3 axis system with 25 mm riser plate |
| **K0942.150** | 150 | 3 axis system with 50 mm riser plates |
| **K0942.175** | 175 | 5 axis system basic set |
| **K0942.180*** | 180 | 5 axis system basic set |
| **K0942.200** | 200 | 5 axis system with 25 mm riser plate |
| **K0942.225** | 225 | 5 axis system with 50 mm riser plate |
| **K0942.250** | 250 | 5 axis system with 75 mm riser plate (25 + 50) |

# K0943

## Jaw plates standard

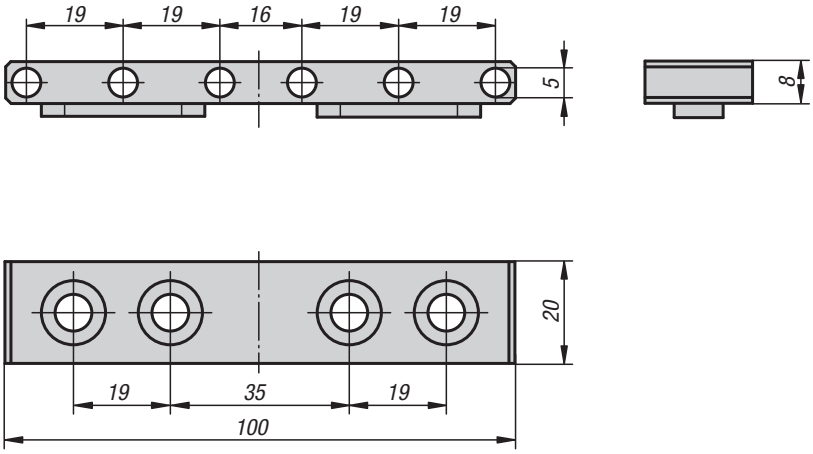

**Material, version:**
Special steel, bright.

**Sample order:**
K0943.110008

**Note:**
Jaw plates with holes to press the jaw pins into. Suitable for all 3 axis and 5 axis clamping systems.

**Accessories:**
Jaw pins K0946

### KIPP Jaw plates, standard

| Order No. | Suitable for |
|---|---|
| K0943.110008 | all 3 axis and 5 axis clamping systems |

# K0944

## Jaw plates machinable

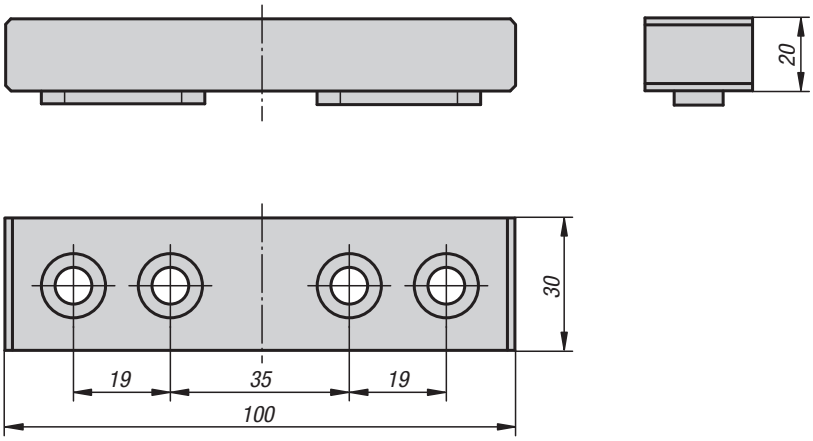

**Material, version:**
Steel 1.0503, bright.

**Sample order:**
K0944.210020

**Note:**
Machinable jaw plates can be machined to suit specific workpieces. Suitable for all 3 axis and 5 axis clamping systems.

### KIPP Jaw plates machinable

| Order No. | Suitable for |
|---|---|
| K0944.210020 | all 3 axis and 5 axis clamping systems |

# K0953

## Draw-down jaws

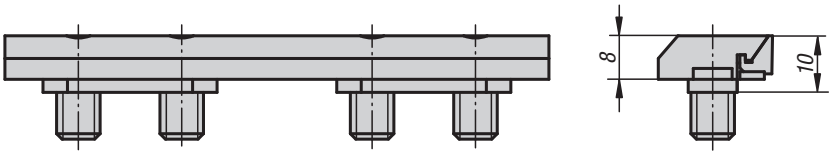

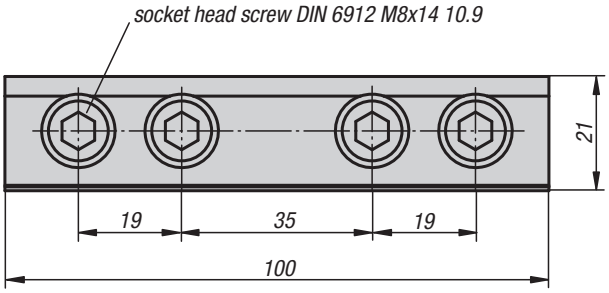


**Material, version:**
Special steel, bright.

**Sample order:**
K0953.110008

**Note:**
Positive down jaw plates for clamping pre-machined workpieces.
Suitable for all 3 axis and 5 axis clamping systems.

### KIPP Draw-down jaws

| Order No. | Suitable for |
|---|---|
| K0953.110008 | all 3 axis and 5 axis clamping systems |

# K0945

## Jaw adapters

for round workpieces

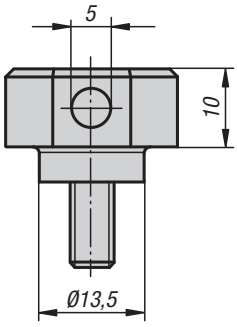


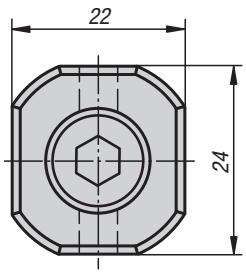


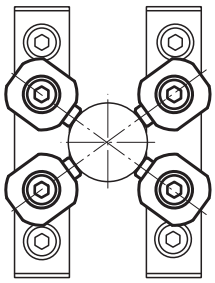

**Material, version:**
Adapter blocks carbon steel, black oxidised.
Socket head screw, grade 10.9.

**Sample order:**
K0945.135010
(supplied in sets of 4)

**Note:**
For clamping round workpieces with a diameter of 30 - 200 mm. Screwed directly into the standard or machinable jaw plates.

**Accessories:**
Jaw pins K0946

### KIPP Jaw adapters for round workpieces

| Order No. | Suitable for |
|---|---|
| K0945.135010 | all 3 axis and 5 axis clamping systems |

KIRÁLY TRADING KFT H-1151 Budapest Mogyoród útja 12 - 14 tel: 061307-3801 Email:pzoli@kiralytrading.hu

# Jaw pins

flattened

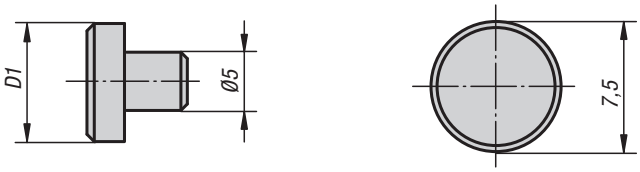


cup point

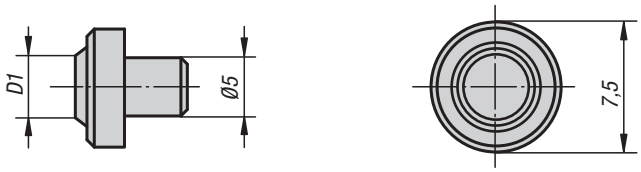


**Material, version:**
Tool steel, hardened.

**Sample order:**
K0946.05600

**Note:**
Suitable for standard jaw plates and jaw adapters of round workpieces.
Installed by pressing in.

## KIPP Jaw pins

| Order No. | Version | D1 | Application |
|---|---|---|---|
| **K0946.05000** | flattened | 7,5 | material over 1000 N/mm² tensile strength |
| **K0946.05400** | cup point | 4 | material up to ca. 1000 N/mm² tensile strength |
| **K0946.05600** | cup point | 6 | material up to ca. 1000 N/mm² tensile strength |

# K0947

## Extension shafts

with union nut

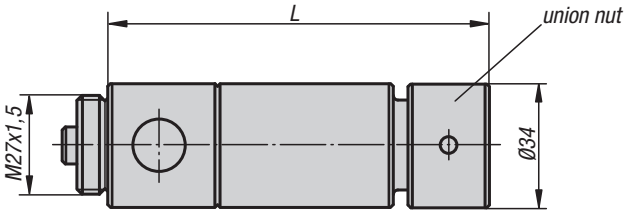

**Material, version:**
Carbon steel, black oxidised.

**Sample order:**
K0947.060

**Note:**
To extend the clamping width.
Supplied with union nut. The extension shafts can be combined as desired.

### KIPP Extension shafts with union nut

| Order No. | L | Clamp range |
|---|---|---|
| **K0947.060** | 60 | 22 - 86 |
| **K0947.120** | 120 | 80 - 146 |
| **K0947.240** | 240 | extension by 240 mm |

# K0948

## Stop set

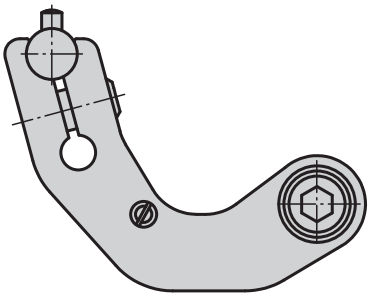

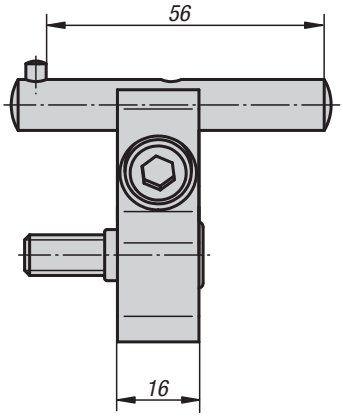


**Material:**
Steel.

**Version:**
Swivel arm, black oxidised.
Stop pin bright.

**Sample order:**
K0948.100

**Note:**
Stop set for direct fastening to fixed jaws. The stop can be swivelled aside for machining of the workpiece without losing the stop dimension.
Supplied complete with attaching parts.

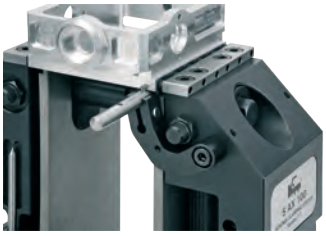

### KIPP Stop set

| Order No. | Suitable for |
|---|---|
| **K0948.100** | all 3 axis and 5 axis clamping systems |

# K0815

## Shoulder screws

Form B

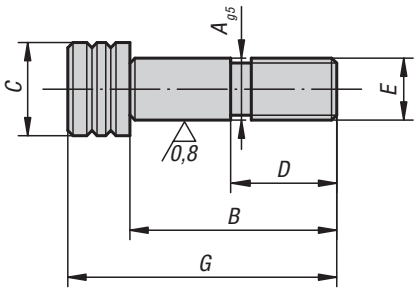


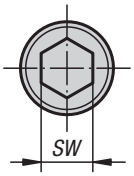

**Material:**
Carbon steel.

**Version:**
Tempered, black oxidised.
Precision diameters ground.

**Sample order:**
K0815.12055

### KIPP Shoulder screws Form B

| Order No. | A | B | C | D | E | G | SW |
|---|---|---|---|---|---|---|---|
| **K0815.12055** | 12 | 55 | 18 | 22 | M12 | 67 | 10 |
| **K0815.16055** | 16 | 55 | 24 | 25 | M16 | 71 | 14 |

# K0951

## Fastening set

for T-slots

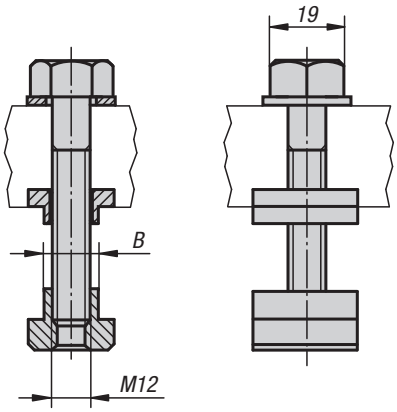


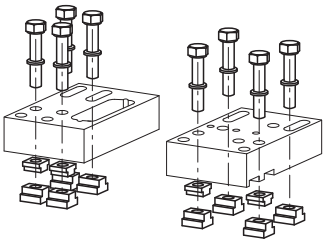

**Material, version:**
Carbon steel, black oxidised.

**Sample order:**
K0951.1412

**Note:**
Fastening sets for aligning and securing 3 and 5 axis clamping systems on tables with T-slots sizes 14 or 18.
Sets consisting of:
8x hexagon screw ISO 4014 M 12x60 12.9
8x nut for T-slots DIN 508
8x washer
4x slot guides

### KIPP Fastening set for T-slots

| Order No. | Version | B |
|---|---|---|
| **K0951.1412** | Slot width 14 | 14 |
| **K0951.1812** | Slot width 18 | 18 |

# K0952

# T-slot plate

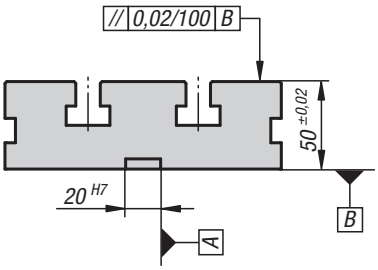


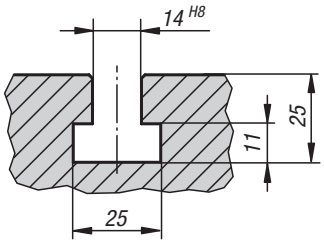


**Material, version:**
Carbon steel, black oxidised.
Contact faces ground.

**Sample order:**
K0952.14063400

**Note:**
T-slot plates with locating slots on the underside for easy alignment of the plate on the machine table.

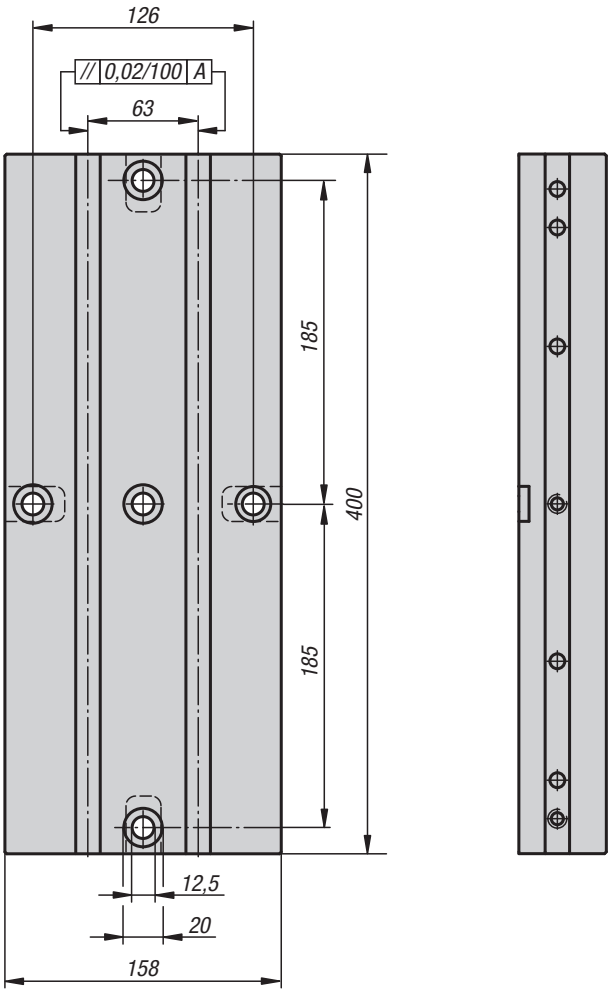


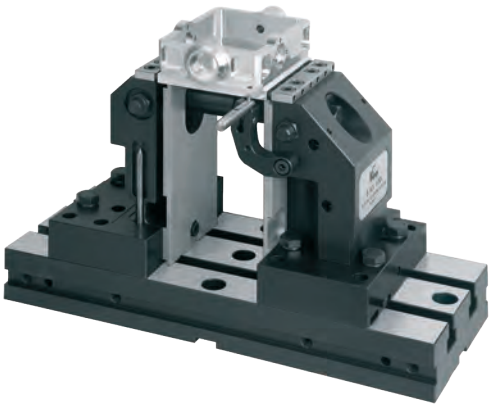

## KIPP T-slot plate

| Order No. | Version |
|---|---|
| K0952.14063400 | Slot width 14 / slot spacing 63 |

KIRÁLY TRADING KFT H-1151 Budapest Mogyoród útja 12 - 14 tel: 061307-3801 Email:pzoli@kiralytrading.hu

# Centric vice

jaw width 80 mm

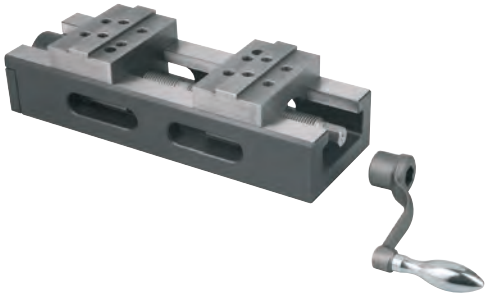

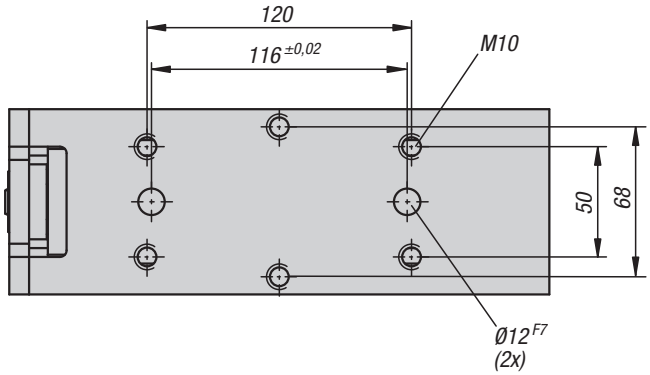


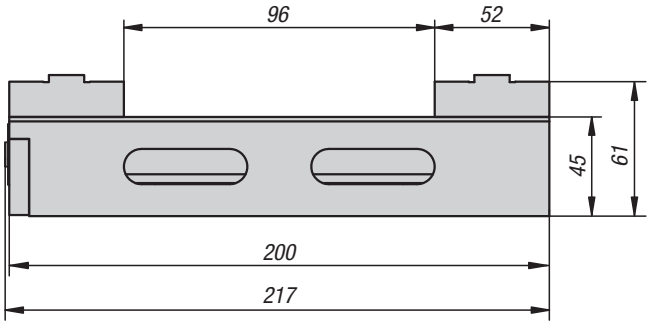


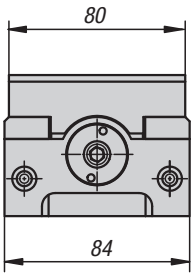


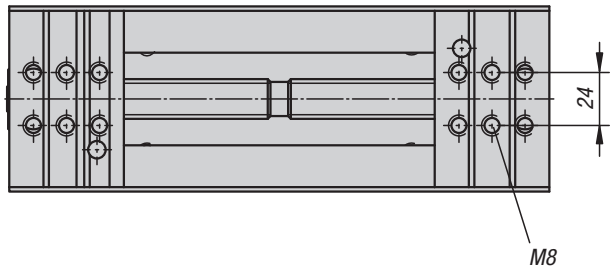


**Material, version:**
Body and jaw holder steel, hardened all over and ground.
Spindle high-strength special steel.

**Sample order:**
K0586.080200

**Note:**
Mechanically operated centric vice.
Centring accuracy:
± 0.015 mm by equal clamping range
± 0.02 mm over entire clamping range.

We recommend using a torque wrench for controlling the clamping force.

Supplied with hex socket crank handle.

Order jaws separately.

**Characteristics:**
- Vice slide and spindle nut in one piece
- Slots and tapped holes for mounting attachment jaws
- Reversible jaws (accessories) with tapped hole for workpiece stop, enables a wider clamping range
- Good swarf and coolant removal

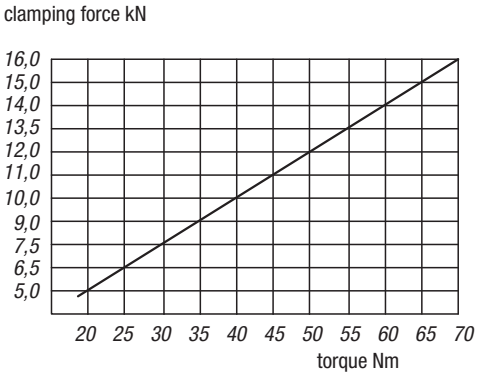


## KIPP Centric vice, jaw width 80 mm

| Order No. | Type |
|---|---|
| K0586.080200 | ZS 80-200 |

# K0587

## Attachment jaws

stepped, with grip rail

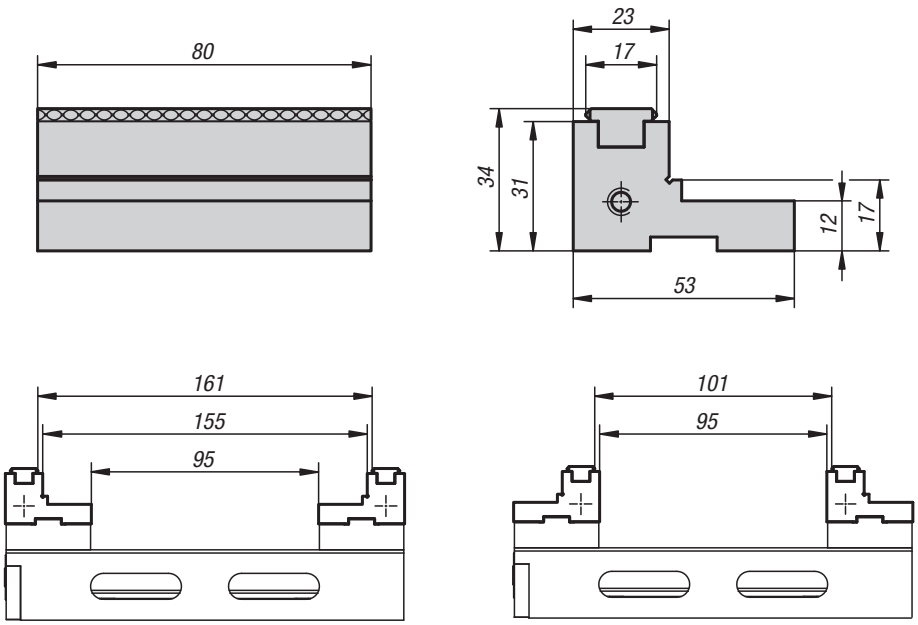

**Material, version:**
Step jaw steel, hardened, clamping surfaces ground.
Grip rail steel, hardened

**Sample order:**
K0587.0801

### KIPP Attachment jaws, stepped, with grip rail

| Order No. | Suitable for<br>-<br>- | Approx.<br>weight<br>kg |
|---|---|---|
| **K0587.0801** | ZS 80-200 | 0,585 |

# K0588

## Attachment jaws

universal

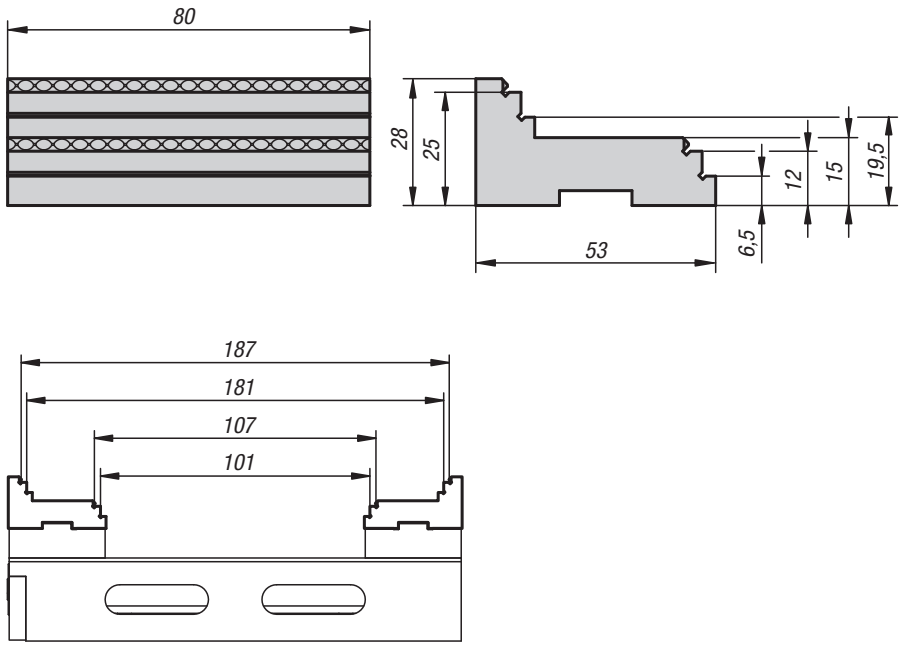

**Material, version:**
Steel hardened, clamping surfaces ground

**Sample order:**
K0588.080

### KIPP Attachment jaws universal

| Order No. | Suitable for<br>-<br>- | Approx.<br>weight<br>kg |
|---|---|---|
| **K0588.080** | ZS 80-200 | 0,485 |

# K0589

## Prism jaws

horizontal and vertical

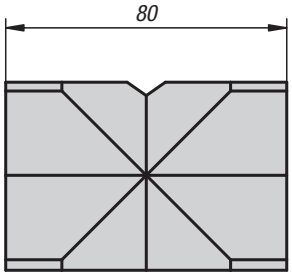


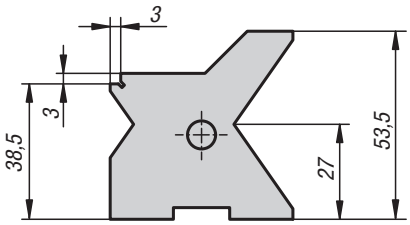

**Material, version:**
Steel, hardened, clamping surfaces, ground

**Sample order:**
K0589.080

**Note:**
Clamping range Ø 11 to 80 mm.

### KIPP Prism jaws horizontal and vertical

| Order No. | Suitable for | Approx. weight kg |
|---|---|---|
| **K0589.080** | ZS 80-200 | 1,0 |

# K0590

## Reversible slides

complete with grip rail

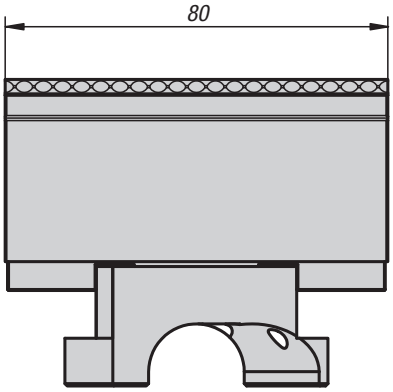


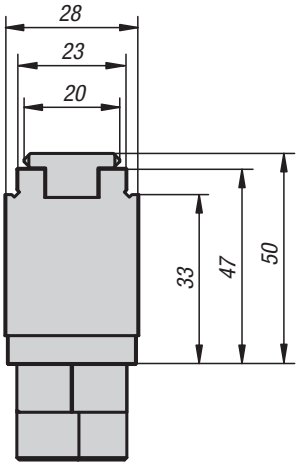

**Material, version:**
Reversible slide and grip rail hardened steel.

**Sample order:**
K0590.080147

**Note:**
Reversible slides enable the clamping of several workpieces. Installed without tools.

### KIPP Reversible slides complete with grip rail

| Order No. | Suitable for | Approx. weight kg |
|---|---|---|
| **K0590.080147** | ZS 80-200 | 0,875 |

# K0591

## Inserts

for stepped jaws or reversible slides

Form A

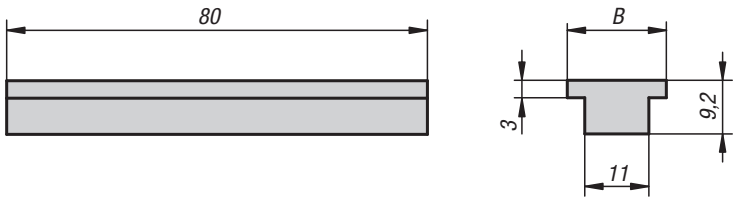


Form B

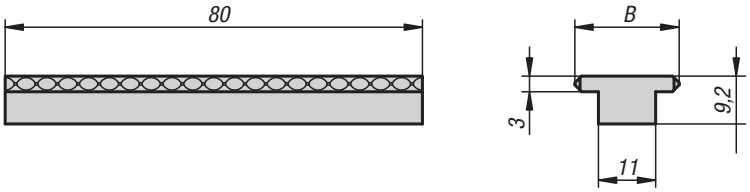

**Material, version:**
Steel, hardened and ground.

**Sample order:**
K0591.080117

**Note:**
Inserts Form A with smooth face Form B serrated face for maximum holding force.

### KIPP Inserts for stepped jaws or reversible slides

| Order No. | Form | B | Suitable for | Approx. weight kg |
|---|---|---|---|---|
| **K0591.080117** | A | 17 | K0587.0801 stepped jaw | 0,06 |
| **K0591.080120** | A | 20 | K0590.080147 reversible slide | 0,06 |
| **K0591.080217** | B | 17 | K0587.0801 attachment step jaw | 0,065 |
| **K0591.080220** | B | 20 | K0590.080147 reversible slide | 0,065 |

# K0592

## Base plate

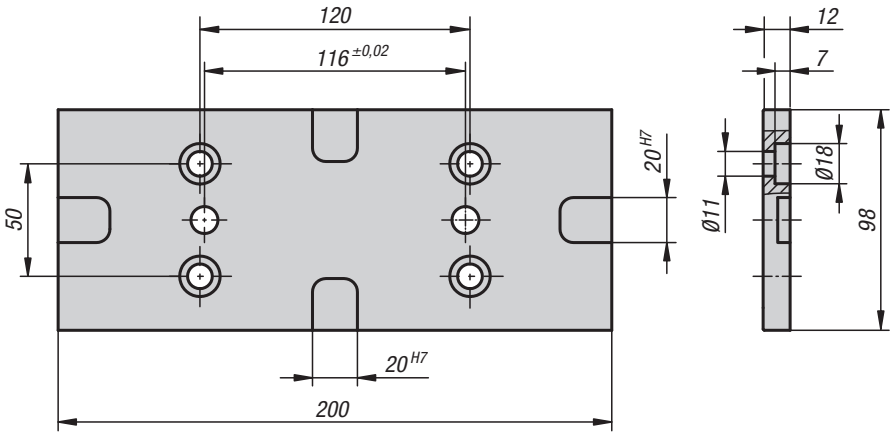

**Material, version:**
Steel, hardened and ground.

**Sample order:**
K0592.080200

**Note:**
The base plate allows the vice to be mounted using clamp straps.

### KIPP Base plate

| Order No. | Suitable for | Approx. weight kg |
|---|---|---|
| **K0592.080200** | ZS 80-200 | 1,66 |

K0593

# Centric vice

jaw width 100 mm

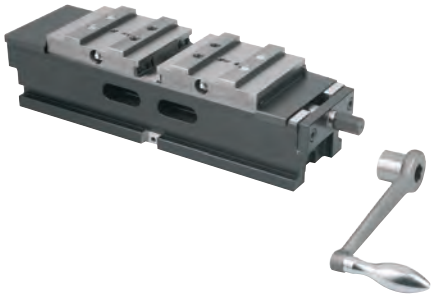

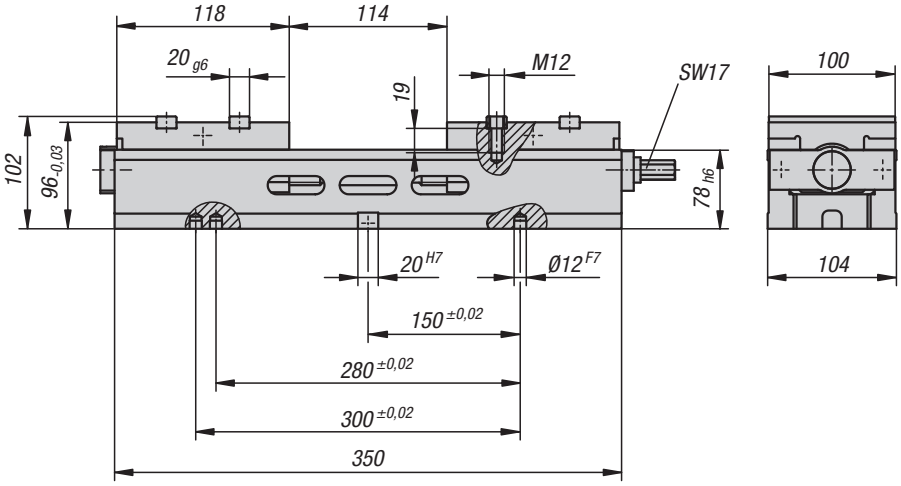


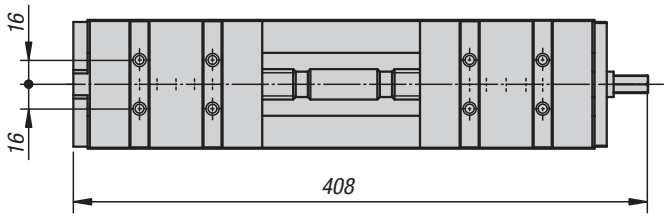


**Material, version:**
Body and jaw holder steel, hardened all over and ground.
Spindle high-strength special steel.

**Sample order:**
K0593.100350

**Note:**
Mechanically operated centric vice.
Centring accuracy:
± 0.015 mm by equal clamping range
± 0.02 mm over entire clamping range.

We recommend using a torque wrench for controlling the clamping force.

Supplied with hex socket crank handle.

Order jaws separately.

**Characteristics:**
- Clamping slide and spindle nut in one piece
- Central lubrication for clamping slide and spindle
- Transverse slots for quick positioning
- Three positioning holes Ø12F7 for 40 and 50 mm grid
- Slots and tapped holes for mounting attachment jaws
- Reversible jaws (accessories) with lateral thread for workpiece stop, enables a wider clamping range
- Good swarf and coolant removal

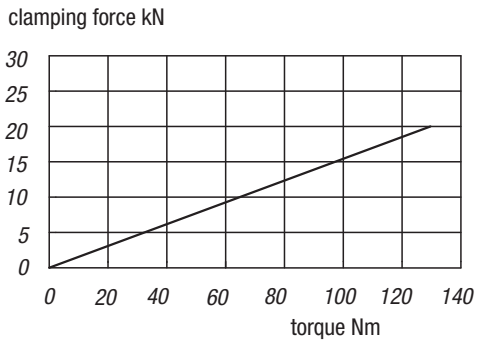


## KIPP Centric vice, jaw width 100 mm

| Order No. | Type |
|---|---|
| K0593.100350 | ZS 100-350 |

# K0594

## Prism jaws

Form A

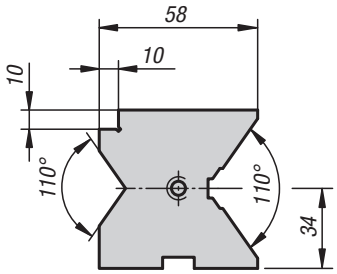


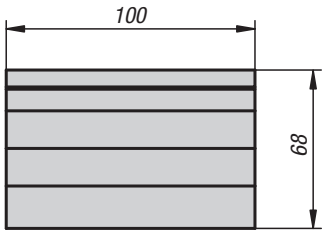

**Material, version:**
Steel, hardened, clamping surfaces, ground

**Sample order:**
K0594.1001

Form B

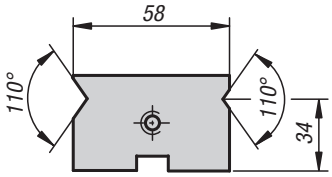


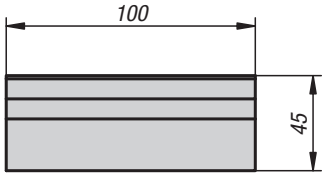


### KIPP Prism jaws

| Order No. | Form | Suitable for | Clamp range | Approx. weight kg |
|---|---|---|---|---|
| **K0594.1001** | A | ZS 100-350 | Ø 20-56 / Ø 35-100 | 2,08 |
| **K0594.1002** | B | ZS 100-350 | Ø 6-14 / Ø 12-32 | 1,73 |

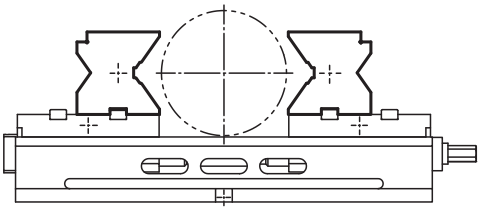

# K0595

## Machinable soft jaw

aluminium

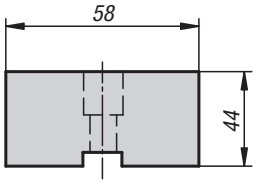


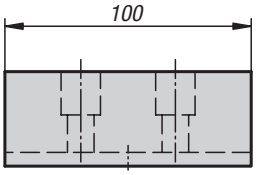

**Material:**
Aluminium.

**Version:**
Bright.

**Sample order:**
K0595.10044

**Note:**
For adaptating to special workpiece contours.

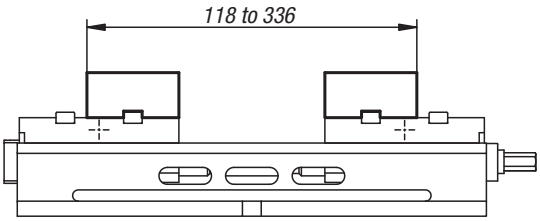


### KIPP Machinable soft jaw, aluminium

| Order No. | Suitable for | Approx. weight kg |
|---|---|---|
| **K0595.10044** | ZS 100-350 | 0,68 |

# K0596

## Stepped jaw

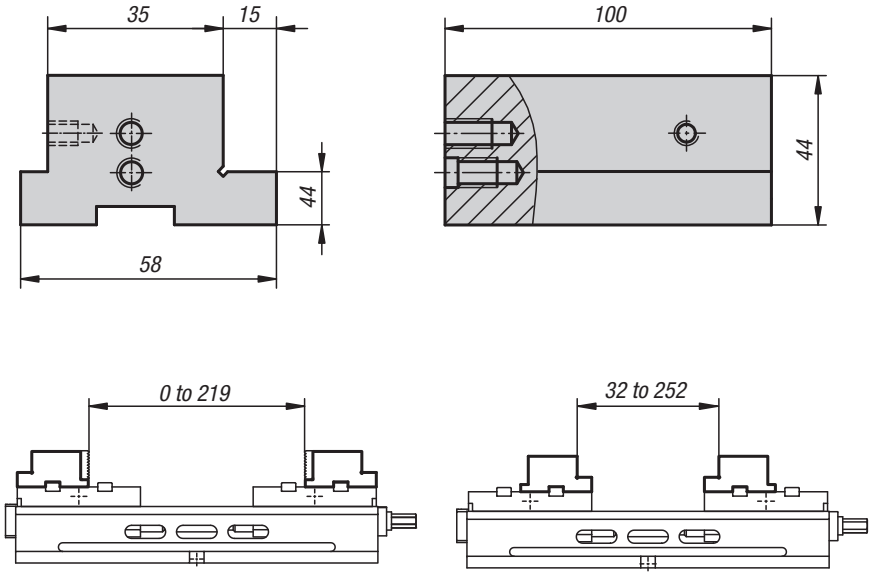

**Material, version:**
Steel, hardened, clamping surfaces, ground

**Sample order:**
K0596.10044

### KIPP Stepped jaw

| Order No. | Suitable for | Approx. weight kg |
|---|---|---|
| **K0596.10044** | ZS 100-350 | 1,18 |

# K0597

## Attachment stepped jaw

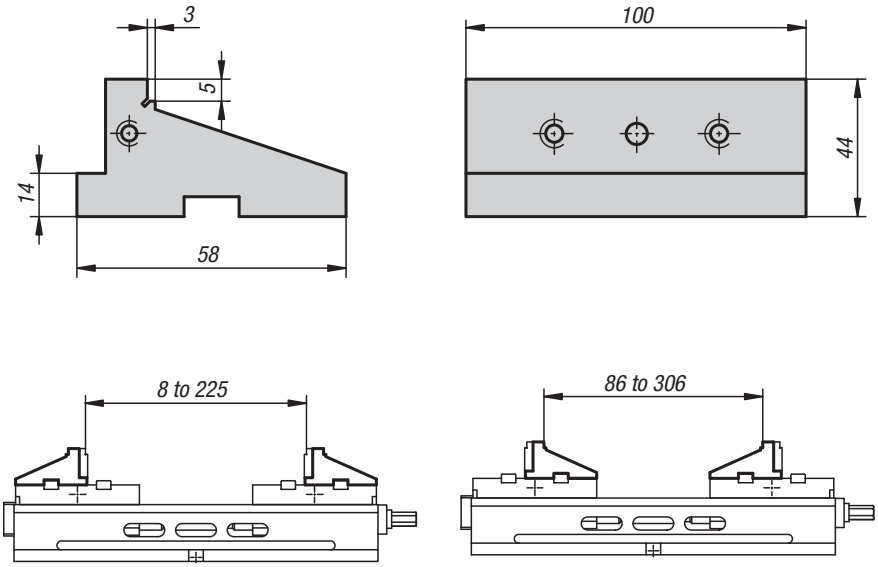

**Material, version:**
Steel, hardened, clamping surfaces, ground

**Sample order:**
K0597.10044

### KIPP Attachment stepped jaw

| Order No. | Suitable for | Approx. weight kg |
|---|---|---|
| **K0597.10044** | ZS 100-350 | 1,01 |

# K0598

## Jaw plates

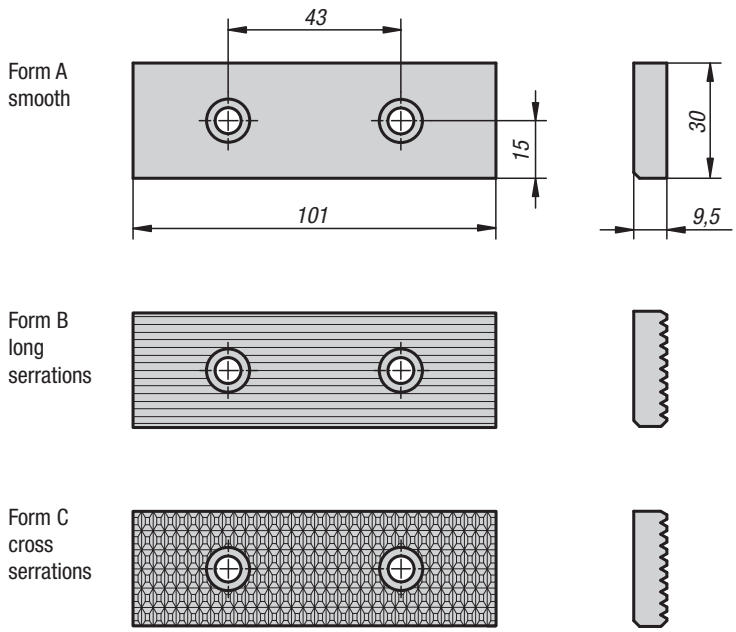


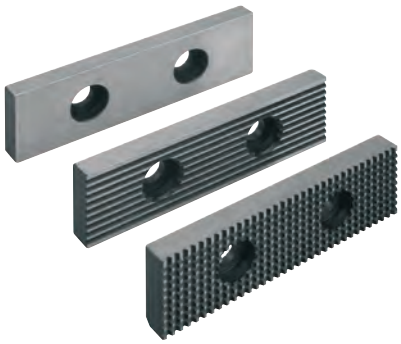

**Material, version:**
Steel, hardened, clamping surfaces, ground

**Sample order:**
K0598.1001

**Note:**
Jaw plates are smooth, long serrated or cross serrated.

### KIPP Jaw plates

| Order No. | Form | Suitable for | Approx. weight kg |
|---|---|---|---|
| **K0598.1001** | A | ZS 100-350 | 0,204 |
| **K0598.1002** | B | ZS 100-350 | 0,192 |
| **K0598.1003** | C | ZS 100-350 | 0,187 |

# K0599

## Soft jaw pads

machinable

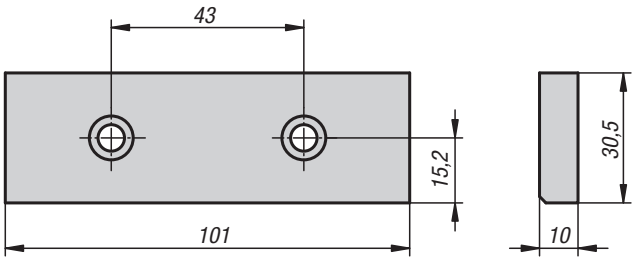

**Material, version:**
Steel, bright.

**Sample order:**
K0599.100

### KIPP Soft jaw pads, machinable

| Order No. | Suitable for | Approx. weight kg |
|---|---|---|
| **K0599.100** | ZS 100-350 | 0,220 |

# K0600

## Stepped jaw pads

Form A

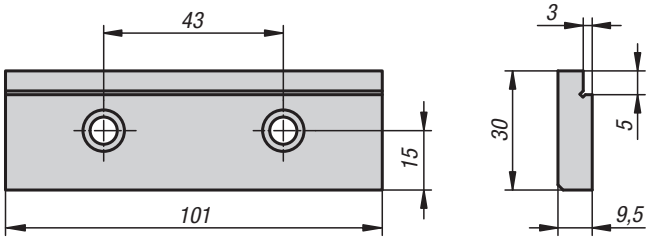

Form B

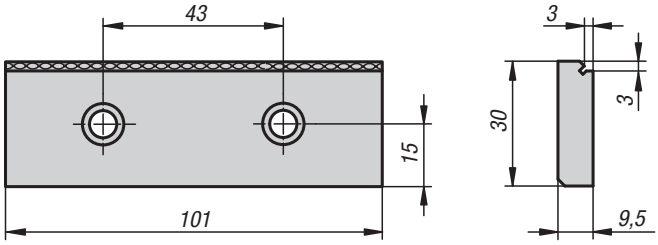


**Material, version:**
Steel, hardened, clamping surfaces, ground

**Sample order:**
K0600.1001

**Note:**
Stepped jaw pads with smooth or with toothed clamping surface.

### KIPP Stepped jaw pads

| Order No. | Form | Suitable for | Approx. weight kg |
|---|---|---|---|
| **K0600.1001** | A | ZS 100-350 | 0,193 |
| **K0600.1002** | B | ZS 100-350 | 0,193 |

# K0601

## Hold-down jaw with spring blade

for rough workpieces

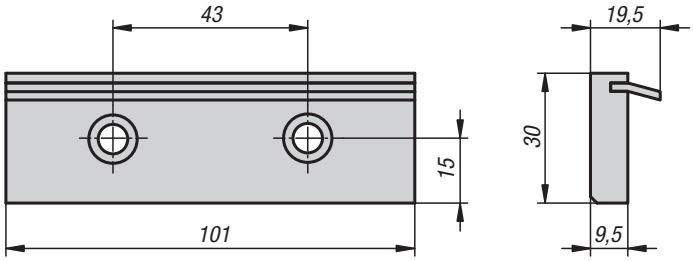

**Material, version:**
Hardened steel

**Sample order:**
K0601.100

### KIPP Hold-down jaw with spring blade for rough workpieces

| Order No. | Suitable for | Approx. weight kg |
|---|---|---|
| **K0601.100** | ZS 100-350 | 0,221 |

# K0602

## Prism jaw pads

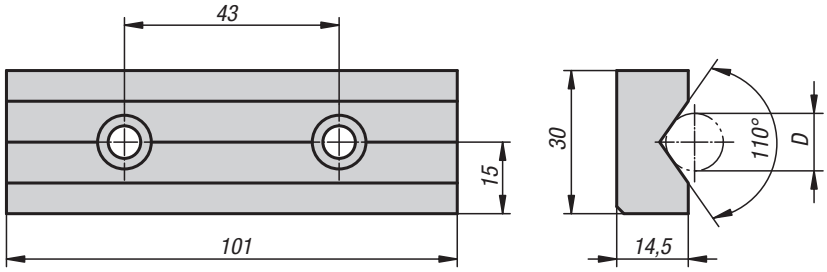

**Material, version:**
Steel, hardened, clamping surfaces, ground

**Sample order:**
K0602.100

### KIPP Prism jaw pads

| Order No. | D | Suitable for | Approx. weight kg |
|---|---|---|---|
| **K0602.100** | 7-34 | ZS 100-350 | 0,271 |

# K0603

## Reversible slides

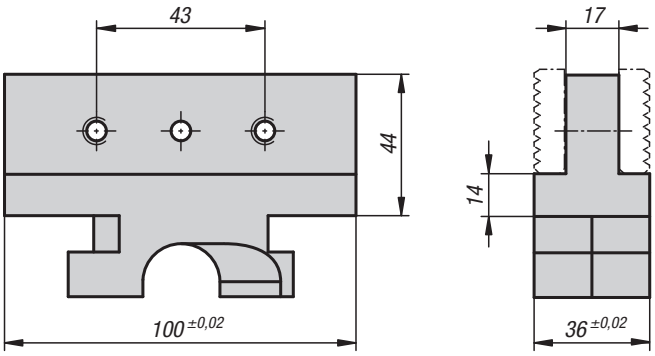

**Material, version:**
Hardened steel

**Sample order:**
K0603.100

**Note:**
Reversible slides enable the clamping of several workpieces. Installed without tools.

Supplied with 4 fastening screws for jaw plates.

### KIPP Reversible slides

| Order No. | Suitable for | Approx. weight kg |
|---|---|---|
| **K0603.100** | ZS 100-350 | 0,918 |

# K0604

## T-slot guide

rhombic

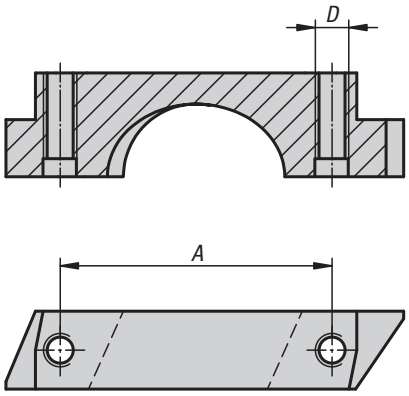

**Material, version:**
Steel, black oxidised.

**Sample order:**
K0604.080

**Note:**
Rhombic T-slot guides for securing to the workpiece base.

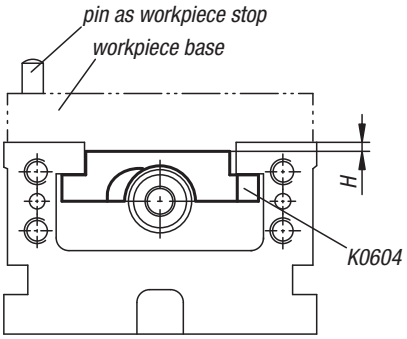


### KIPP T-slot guide, rhombic

| Order No. | A | B | D | H | Suitable for | Approx. weight kg |
|---|---|---|---|---|---|---|
| **K0604.080** | 34 | 10 | M5 | 4,5 | ZS 80-200 | 0,037 |
| **K0604.100** | 37 | 12 | M5 | 3,5 | ZS 100-350 | 0,04 |

# K0605

## Slot guides

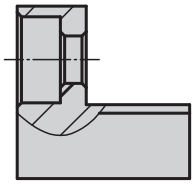

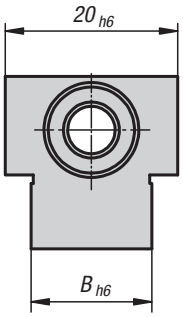

**Material, version:**
Steel, black oxidised.

**Sample order:**
K0605.14

**Note:**
Slot guides for quickly and accurately positioning the vice on the machine table.

### KIPP Slot guides

| Order No. | B | Approx. weight kg |
|---|---|---|
| **K0605.14** | 14 | 0,027 |
| **K0605.18** | 18 | 0,031 |
| **K0605.20** | 20 | 0,034 |
| **K0605.22** | 22 | 0,037 |

# K0606

## Claw clamps

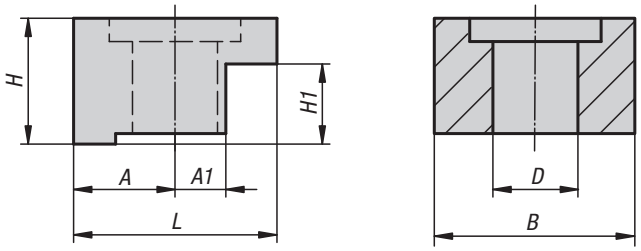


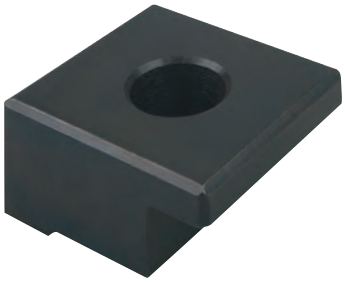

**Material, version:**
Steel, black oxidised.

**Sample order:**
K0606.080

**Note:**
Claw clamps for securing the vice to the machine table.

### KIPP Claw clamps

| Order No. | A | A1 | B | D | H | H1 | L | Suitable for | Approx. weight kg |
|---|---|---|---|---|---|---|---|---|---|
| **K0606.080** | 14 | 7 | 28 | 11 | 20 | 12 | 30 | ZS 80-200 | 0,100 |
| **K0606.100** | 18 | 8 | 32 | 13 | 20 | 14 | 35 | ZS 100-350 | 0,111 |

# K0607

## Hinged stops

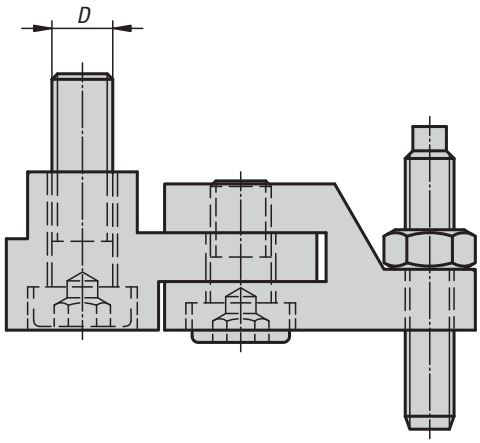

**Material, version:**
Steel, black oxidised.

**Sample order:**
K0607.080

**Note:**
Hinged stop for fastening directly to the sliding or middle jaw.

### KIPP Hinged stops

| Order No. | D | Suitable for | Approx. weight kg |
|---|---|---|---|
| **K0607.080** | M6 | ZS 80-200 | 0,102 |
| **K0607.100** | M8 | ZS 100-350 | 0,112 |

# Your way to KIPP

Route to Sulz-Holzhausen

**By car.**
A 81 Stuttgart-Singen, exit Sulz a.N.
Left on to L 409
Right on to K 5505 and K 5508 to Holzhausen

From Switzerland
Zurich A 1/A 4 direction Schaffhausen-Süd
Exit A 4/15 direction border crossing
A 81 direction Stuttgart exit Sulz a.N.

From France
Strasbourg border crossing Kehl
B 28 to Freudenstadt
B 294 to Lossburg
L 412 to Leinstetten
L 409 to Sulz

**By plane.**
Stuttgart Airport, Kloten Zurich, Euro-Airport Basel, Baden Airport Rheinmünster-Söllingen

The publication of this catalogue renders all earlier publications invalid. Dimensions and other information are correct at the time of going to press.

We reserve the right to make technical changes. We cannot be held liable for printing errors.

Reprint and reproduction – even of excerpts – are only allowed with our permission.

WE01ENCAT1508 – Printed in Germany

The standard terms and conditions of sale, delivery and payment that you can find on our website **www.kipp.com** apply.

**Heinrich Kipp Werk KG**

Postfach 11 60
DE-72168 Sulz a.N.

Tel.: +49 (0) 7454 793-0
Fax: +49 (0) 7454 793-33
Internet www.kipp.com
E-Mail verkauf@kipp.com
technik@kipp.com